Monozone/Multizone (NH5, QH5)

Summit (YH5)

Bigflow (G4, GH4)

HITACHI
Inspire the Next

Technical Catalogue

Monozone/Multizone Outdoor Unit

RAC RAM

Monozone/Mutizone Indoor Unit

RAK RAF

RAI RAD

Summit and Bigflow

RAS/RAC

HITACHI

Specifications in this catalogue are subject to change without prior notice in order for HITACHI to bring in the latest innovations to their customers

Whilst every effort is made to ensure that all dimensions and specifications are correct, any printers' error not rectified are outside the control of HITACHI, who cannot be held responsible for the same

0 CONTENTS

1 SYSTEM DESCRIPTION 1-1

1.1 Features and Benefits of Monozone(RAC) & Multizone(RAM) Outdoor Units 1-2
1.2 Features and Benefits of Monozone/Multizone Indoor Units 1-5
1.2.1 RAK - Wall Type 1-5
1.2.2 RAF - Floor Type 1-6
1.2.3 RAI - Four Way Cassette Type 1-7
1.2.4 RAD - Duct Type 1-8
1.3 Benefits and Features of Split models 1-9
1.3.1 Summit Range 1-9
1.3.2 Bigflow Range 1-10

2 GENERAL DATA 2-1

2.1. Monozone/Multizone 2-2
2.1.1. Wall Type (RAK-25NH5/35NH5/50NH5/65NH5) 2-2
2.1.2. Floor Type (RAF-25NH5/35NH5/50NH5) 2-3
2.1.3. 4 Way Ceiling Cassette Type (RAI-25NH5/35NH5/50NH5) 2-4
2.1.4. Duct Type (RAD-25NH5/35NH5) 2-5
2.1.5. Monozone Outdoor (RAC-25NH5/35NH5/50NH5/65NH5) 2-6
2.1.6. Multizone Outdoor (RAM-40QH5/55QH5/65QH5//72QH5/80QH5) 2-7
2.2. Summit/Bigflow 2-8
2.2.1. Summit Inverter (RAS-18YH5/25YH5/35YH5/50YH5/60YH5/70YH5/80YH5) 2-8
2.2.2. Summit Inverter (RAC-18YH5/25YH5/35YH5/50YH5/60YH5/70YH5/80YH5) 2-9
2.2.3. Bigflow Heatpump (RAS-07GH4/09GH4/14GH4/18GH4/24GH4) 2-12
2.2.4. Bigflow Heatpump (RAC-07GH4/09GH4/14GH4/18GH4/24GH4) 2-13
2.2.5. Bigflow Cooling (RAS-07G4/09G4/14G4/18G4/24G4) 2-14
2.2.6. Bigflow Cooling (RAC-07G4/09G4/14G4/18G4/24G4) 2-15

3 DIMENSIONAL DATA 3-1

3.1. Monozone/Multizone Indoor Units 3-2
3.1.1. Wall Type: RAK-18NH5/25NH5/35NH5/50NH5 3-2
3.1.2. Wall Type: RAK-65NH5 3-3
3.1.3. Floor Type: RAF-25NH5/35NH5/50NH5 3-4
3.1.4. 4-Way Ceiling Cassette Type: RAI-25NH5/35NH5/50NH5 3-5
3.1.5. Duct Type: RAD-25NH5/35NH5 3-6
3.2. Monozone/Multizone Outdoor Units 3-7
3.2.1. Monozone: RAC-25NH5/35NH5 3-7
3.2.2. Monozone: RAC-50NH5/RAC-65NH5 3-8
3.2.3. 2 Room Multizone: RAM-40QH5 3-9
3.2.4. 3 Room Multizone: RAM-55QH5 3-10
3.2.5. 3 Room Multizone: RAM-65QH5 3-11
3.2.6. 4 Room Multizone: RAM-72QH5 3-12
3.2.7. 4 Room Multizone: RAM-80QH5 3-13
3.3. Split Units 3-14
3.3.1. Summit: RAS-18YH5/25YH5/35YH5/50YH5 3-14
3.3.2. Summit: RAC-18YH5/25YH5/35YH5 3-15
3.3.3. Summit: RAC-50YH5 3-16
3.3.4. Summit: RAS-60YH5/70YH5 3-17
3.3.5. Summit: RAC-60YH5 3-18
3.3.6. Summit: RAC-70YH5 3-19
3.3.7. Summit: RAS-80YH5 3-20
3.3.8. Summit: RAC-80YH5 3-21
3.3.9. Bigflow: RAS-07/09/14G4/GH4 3-22
3.3.10. Bigflow: RAC-07/09G4/GH4 3-23
3.3.11. Bigflow: RAC-14G4/GH4 3-24
3.3.12. Bigflow: RAS-18G4/GH4 3-25
3.3.13. Bigflow: RAC-18G4/GH4 3-26
3.3.14. Bigflow: RAS-24G4/GH4 3-27
3.3.15. Bigflow: RAC-24G4/GH4 3-28

4 CAPACITIES AND SELECTION DATA 4-1

4.1. System Selection Procedure 4-2
4.1.1. Selection Unit Features 4-2
4.1.2. Selection Guide 4-2
4.1.3. Monozone/Multizone combination table 4-3
4.2. Operation Space 4-5
4.2.1. RAI 4-Way Ceiling Cassette Type 4-5
4.2.2. RAK Wall Type 4-5
4.2.3. RAF Floor Type 4-5
4.2.4. Outdoor Units 4-6
4.3. Capacity Characteristic Curves of Outdoor Units 4-7
4.4. Correction Factor According to Piping Length 4-36
4.5. Selection Table 4-41
4.6. Combination Table For Monozone Outdoor 4-56
4.6.1. RAC-25/35/50/65NH5 4-56
4.7. Combination Table For Multizone Outdoor 4-57
4.7.1. RAM-40QH5 4-57
4.7.2. RAM-55QH5 4-58
4.7.3. RAM-65QH5 4-59
4.7.4. RAM-72QH5 4-60
4.7.5. RAM-80QH5 4-61

5 WORKING RANGE 5-1
5.1. Power supply 5-2

6 ELECTRICAL DATA 6-1
6.1. Indoor Unit 6-2
6.2. Outdoor Unit 6-4

7 ELECTRICAL WIRING DIAGRAM 7-1
7.1.1. RAK-18NH5/25NH5/35NH5/50NH5 7-2
7.1.2. RAK-65NH5 7-3
7.1.3. RAF-25NH5/35NH5/50NH5 7-4
7.1.4. RAI-25NH5/35NH5/50NH5 7-5
7.1.5. RAD-25NH5/35NH5 7-6
7.1.6. RAC-25NH5/35NH5/50NH5 7-7
7.1.7. RAC-65NH5 7-8
7.1.8. RAM-40QH5 7-9
7.1.9. RAM-55QH5 7-10
7.1.10. RAM-65QH5 7-11
7.1.11. RAM-72QH5 7-12
7.1.12. RAM-80QH5 7-13
7.1.13. RAS-18YH5/25YH5/35YH5/50YH5 7-14
7.1.14. RAS-60YH5/RAS-70YH5 7-15
7.1.15. RAS-80YH5 7-16
7.1.16. RAC-18YH5/25YH5/35YH5 7-17
7.1.17. RAC-50YH5/60YH5 7-18
7.1.18. RAC-70YH5 7-19
7.1.19. RAC-80YH5 7-20
7.1.20. RAS/RAC-07G4, RAS/RAC-09G4, RAS/RAC-14G4 7-21
7.1.21. RAS/RAC-18G4, RAS/RAC-24G4 7-22
7.1.22. RAS/RAC-07GH4, RAS/RAC-09GH4, RAS/RAC-14GH4 7-23
7.1.23. RAS/RAC-18GH4, RAS/RAC-24GH4 7-24

8 REFRIGERANT CYCLE 8-1
8.1. Monozone/Multizone Indoor Units 8-2
8.1.1. RAK-18NH5/25NH5/35NH5/50NH5 8-2
8.1.2. RAK-65NH5 8-3
8.1.3. RAI-25NH5/35NH5/50NH5 8-4
8.1.4. RAF-25NH5/35NH5/50NH5 8-5
8.1.5. RAD-25NH5/35NH5 8-6
8.2. Monozone/Multizone Outdoor Units 8-7
8.2.1. RAC-25NH5/35NH5 8-7
8.2.2. RAC-50NH5 8-8
8.2.3. RAC-65NH5 8-9
8.2.4. RAM-40QH5 8-10
8.2.5. RAM-55QH5 8-11
8.2.6. RAM-65QH5 8-12
8.2.7. RAM-72QH5 8-13
8.2.8. RAM-80QH5 8-14
8.3. Inverter Split Units 8-15
8.3.1. RAS/RAC-18YH5 8-15
8.3.2. RAS/RAC-25YH5 8-16
8.3.3. RAS/RAC-35YH5 8-17
8.3.4. RAS/RAC-50YH5 8-18
8.3.5. RAS/RAC-60YH5 8-19
8.3.6. RAS/RAC-70YH5 8-20
8.3.7. RAS/RAC-80YH5 8-21
8.4. Constant Speed Split Units 8-22
8.4.1. RAS/RAC-07G4 8-22
8.4.2. RAS/RAC-09G4 8-23
8.4.3. RAS/RAC-14G4 8-24
8.4.4. RAS/RAC-18G4 8-25
8.4.5. RAS/RAC-24G4 8-26
8.4.6. RAS/RAC-07GH4 8-27
8.4.7. RAS/RAC-09GH4 8-28
8.4.8. RAS/RAC-14GH4 8-29
8.4.9. RAS/RAC-18GH4 8-30
8.4.10. RAS/RAC-24GH4 8-31

9 REMOTE CONTROLLERS OPERATION 9-1
9.1 Remote control function 9-2
9.1.1. Automatic operation 9-3
9.1.2. Auto restart control 9-3
9.1.3. Heating operation 9-3
9.1.4. Cooling operation 9-3
9.1.5. Dehumidifying operation 9-3
9.1.6. Auto Changeover 9-3
9.1.7. How to set sleep timer 9-4
9.1.8. How to adjust the air deflector 9-4
9.1.9. How to set time 9-4
9.1.10. How to set off timer 9-4
9.1.11. How to set on timer 9-5
9.1.12. How to set on/off timer 9-5

10 UNITS INSTALLATION 10-1
10.1 Unit installation 10-2
10.1.1 Initial Check 10-2
10.1.2 Installation 10-2
10.2 Installation of indoor unit 10-4
10.2.1 Installation Of Wall Type Indoor 10-4
10.2.2 Installation Of 4 Way Ceiling Cassette 10-5
10.2.3 Installation of Duct Type Indoor 10-7
10.2.4 Installation of Outdoor Unit 10-8

11 REFRIGERANT PIPING AND REFRIGERANT CHARGE 11-1
11.1. Refrigerant Piping 11-2
11.1.1. Refrigerant charged method 11-2

12 DRAIN PIPING 12-1
12.1 General 12-2
12.2 Drain pump 12-3
12.2.1 Build in drain pump 12-3
12.2.2 Specification of drain pump 12-3

13 ELECTRICAL WIRING 13-1
13.1 General Check 13-2
13.2 Electrical wiring for Indoor Unit 13-2
13.2.1 Electrical Wiring Connection 13-2
13.3 Electrical wiring for Outdoor Unit 13-3
13.3.1 Electrical Wiring Connection 13-3

14 TROUBLESHOOTING 14-1
14.1 Initial Troubleshooting 14-2
14.1.1 Precaution for troubleshooting 14-2
14.1.2 RAC-25NH5, RAC-35NH5, RAC-50NH5, RAC-65NH5 14-3
14.1.3 RAC-18YH5, RAC-25YH5, RAC-35YH5 14-4
14.1.4 RAM-55QH5, RAM-65QH5 14-5
14.2 Troubleshooting Flow Chart 14-6
14.2.1 Preliminary check 14-6
14.2.2 Checking the indoor unit electrical parts 14-7
14.2.3 Checking the remote controller 14-10
14.2.4 Checking the outdoor unit 14-10
14.3 Fault Finding Chart 14-11
14.3.1 RAK-25NH5, RAK-35NH5, RAK-50NH5,RAK-65NH5 14-11
14.3.2 RAI-25NH5, RAI-35NH5, RAS-50NH5, RAD-25NH5, RAD-35NH5 14-12
14.3.3 RAF-25NH5, RAF-35NH5, RAF-50NH5 14-13
14.3.4 RAS-07G4, RAS-09G4, RAS-14G4, RAS-18G4, RAS-24G4 14-14
14.3.5 RAS-07GH4, RAS-09GH4, RAS-14GH4, RAS-18GH4, RAS-24GH4 14-15
14.3.6 RAS-18YH5, RAS-25YH5, RAS-35YH5, RAS-50YH5, RAS-60YH5, RAS-70YH5 RAS-80YH5 14-16
14.3.7 RAC-25NH5, RAC-35NH5, RAC-50NH5 RAC-65NH5 14-17
14.3.8 RAC-18YH5, RAC-25YH5, RAC-35YH5, RAC-50YH5, RAC-60YH5, RAC-70YH5 RAC-80YH5 14-18
14.3.9 RAM-55QH5, RAM 65QH5 14-19
14.4 Thermistor 14-22
14.4.1 Name and role of each thermistor 14-22
14.4.2 Reference value for thermistor's resistance and temperature 14-22
14.4.3 Thermistor resistance-temperature graph 14-23

15 MISCELLANEOUS NOTE 15-1
15.1. Miscellaneous Notes 15-2
15.1.1. Installation in Snowy Area 15-2
15.1.2. Installation of hot pipe 15-2

1 SYSTEM DESCRIPTION

CONTENTS

1 SYSTEM DESCRIPTION 1-1
1.1 Features and Benefits of Monozone(RAC) & Multizone(RAM) Outdoor Units 1-2
1.2 Features and Benefits of Monozone/Multizone Indoor Units 1-5
1.2.1 RAK - Wall Type 1-5
1.2.2 RAF - Floor Type 1-6
1.2.3 RAI - Four Way Cassette Type 1-7
1.2.4 RAD - Duct Type 1-8
1.3 Benefits and Features of Split models 1-9
1.3.1 Summit Range 1-9
1.3.2 Bigflow Range 1-10

1.1 FEATURES AND BENEFITS OF MONOZONE(RAC) & MULTIZONE(RAM) OUTDOOR UNITS

■ Monozone/Multizone All DC PAM Inverter Multi Air Conditioners with Twin Rotary and Scroll Compressors

HITACHI proudly introduces the new line up of Monozone/Multizone series in order to respond to the request of air conditioning markets, for small and medium capacity units.

A new one-room type "MONOZONE" is added to the "MULTIZONE" series in which up four indoor units can be connected to one outdoor unit. Thus, small offices, hotels, shops or houses can be air-conditioned properly by using combinations of the one-room type to four-room types of indoor and outdoor units. What's more, the on-board PAM provides high power and performance for greater energy efficiency. Creating the optimum, comfortable air-conditioned environment is Hitachi's specialty.

- New Monozone outdoor units 2.5kW RAC-25NH5, 3.5kW RAC-35NH5 ,5.0kW RAC-50NH5 and RAC-65NH5
- New MultiZone 2 rooms outdoor unit 4kW RAM-40QH5
- New Indoor units wall type 1.8kW RAK-18NH5 ,2.5kW RAK-25NH5, 3.5kW RAK-35NH5 , 5kW RAK-50NH5 and 6.05 kW RAK-65 NH5
- New Indoor units floor type 2.5kW RAF-25NH5 ,3.5kW RAF-35NH5 and 5kW RAF-50NH5.
- New Indoor units 4-way cassette type 2.5kW RAI-25NH5 ,3.5kW RAI-35NH5 and 5kW RAI-50NH5.
- Connectable up to: Maximum 4 Indoor Units each Outdoor Unit (7.1kW & 8.0kW)
- Maximum Total Combination kilowatt of 150%
- HITACHI produces eco-friendly room air conditioners by using a new refrigerant, HFC (R410A), which does not destroy the ozone layer, and is developing technologies for saving energy and reducing power consumption.

■ Various Indoor units and combinations

The new line-up of new Monozone/Multizone series indoor units has been extended up to 4 indoor units in 13 types to find various building requirements.

Indoor Unit Type	Nominal Kilowatt (kW)				
	1.8	2.5	3.5	5.0	6.05
RAK-	O	O	O	O	O
RAI-	-	O	O	O	-
RAF-	-	O	O	O	-
RAD-	-	O	O	-	-

O: AVAILABLE

■ Minimum and maximum combination of Outdoor and Indoor Units

Outdoor Unit Model	Indoor Unit				
	Minimum Combination Kilowatt (kW)	Maximum Combination Kilowatt (Kw)	Minimum Combination of Indoor Unit	Maximum Combination of Indoor Unit	Minimum Individual Operation Kilowatt (kW)
RAM-40QH5	3.6	6.0	2	2	1.8
RAM-55QH5	3.6	7.5	2	2	1.8
RAM-65QH5	3.6	8.8	2	3	1.8
RAM-72QH5	3.6	11.0	2	4	1.8
RAM-80QH5	3.6	12.0	2	4	1.8

1) In case that RAM-40/55/65/72/80QH5 is used, the minimum quantity of indoor unit to be connected shall be 2
2) Simultaneous operation of cooling (dry) and heating is not available

■ High economical efficiency operation

HITACHI uses the high technology to achieve the high operation efficiency. The applications of the following technologies provide HITACHI to achieve results like the great power saving due to heat recovery system.

These technologies are:

■ All PAM Inverter

Inverter driven systems have a big performance advantage over constant speed systems. The variable compressor can make a very fast start-up and reach the setting temperature rapidly, then reduce the rotation speed to achieve energy savings of about 30% with no loss of comfort. Moreover, only Hitachi's DC driven fans and compressors deliver about 10% better performance than AC inverters. HITACHI is the world's pioneer of DC inverter systems and PAM in room air conditioners.

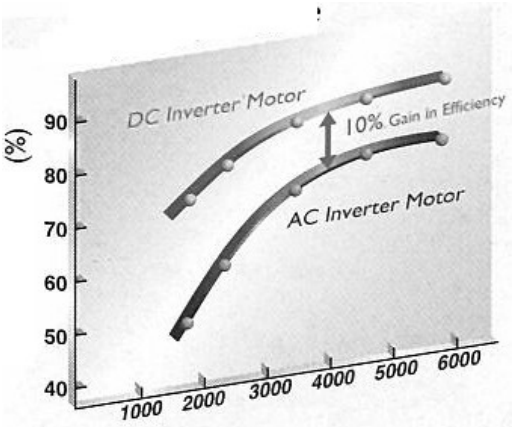

■ Inverter Control

Hitachi's PAM control system is able to keep the current pulse waveform to avoid distortion. It enhances the power efficiency. The cutting edge device is employed in HITACHI MONOZONE/MULTIZONE for your comfort and energy saving for our environment.

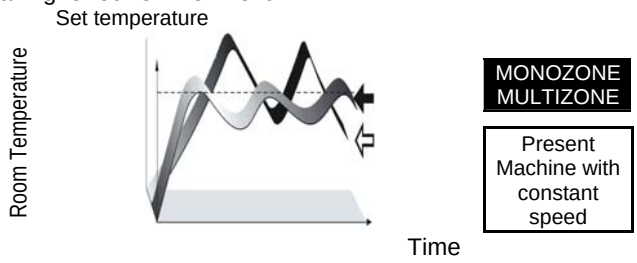

In case of MONOZONE/MULTIZONE
Quickly reaches set temperature with high power, then maintains stable energy-saving operation.

In case of Existing Machine with Constant Speed
Slowly reaches set temperature, then turns on and off repeatedly to maintain the temperature, causing uneconomical operation

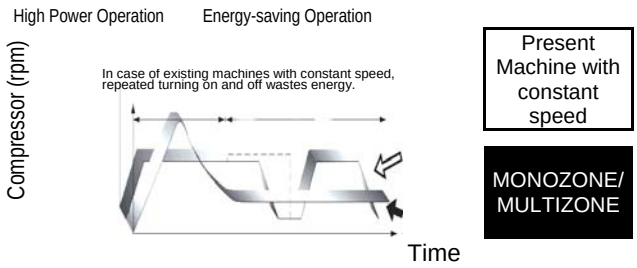

■ High performance, heating at –15°C

Hitachi's PAM inverter system achieves the effective utilization of power input and minimizes loss less than 1. You can enjoy high COP, top class in industry. Especially heating performance is improved and you can enjoy heating comfort even at -15°C degree ambient temperature

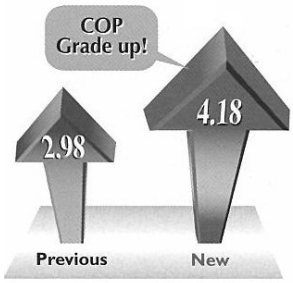

■ Auto-Restart

If auto-restart mode was selected at the ON/OFF switch, the unit automatically resumes operation in the mode that was in use beforehand:

■ Auto Changeover (for RAC-25/35/50/65NH5)

The built-in microcomputer continuously selects the best operating mode automatically to provide maximum comfort, based on the set temperature and measurements taken every 10 minutes by a sensor.

■ Digital DC scroll compressor (for RAM-80QH5)

The motor uses digital control to maximize PAM control performance

- Loss during high-speed revolution is reduced, thanks to digital control of the motor.
- Three balancers mounted on the crankshaft lessen shaft run out during high-speed revolution.
- Efficient operation with drastically reduced refrigerant leakage is ensured by the automatic compression system, in which that tip of the slewing scroll is kept in absolute contact with the fixed scroll, in addition to special processing of the scroll surface.

■ QH5 series – use of the HFC new R410A Refrigerant

Hitachi developed and introduced all models to meet the global needs to help protect the Earth's environment by using non-ozone depleting refrigerant, R410A as Hitachi's standard series.

■ Twin rotary compressor (for RAM-40/55/65/72QH5 and RAC-25/35/50/65NH5)

Hitachi's new twin rotary compressor has less vibration and higher efficiency than conventional rotary compressors

- Two rotating cylinders ensure well-balanced rotations unlike the conventional single rotary type, thus vibration noise is greatly reduced.
- The compressor's operation is improved by moving two independent cylinders efficiently

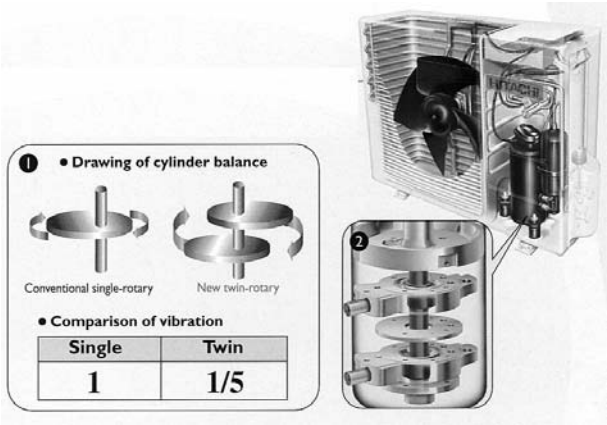

■ Easy installation (for RAM-72/80QH5)

The 4-room type covers 60m & 70m, while the 3 room types covers 60m in total with vertical interval of 10m. Furthermore, these lengths are ensured without refrigerant charge.

■ Easy servicing

Self-diagnosis

- Errors are easily identified by the LED blinking patterns of the indoor and outdoor units.

1.2 FEATURES AND BENEFITS OF MONOZONE/MULTIZONE INDOOR UNITS

1.2.1 RAK - Wall Type

A new line-up perfectly fits your room with gradation-designed grills and symmetric design. Improves efficiency and noise-controlled performance dramatically.

■ **Powerful**

Newly developed super big flap delivers air quickly to every corner of the room, and the powerful, sweeping airflow eliminated dead zones and improves the cooling and heating effect.

■ **Quiet Operation**

The trapezoidal blades cut the air diagonally to minimize air resistance, and conical blade fan ensures a high airflow. The fan diameter has been increased from the conventional 90 mm to 100mm, so low noise yet higher airflow is produced with slow rotation.

Conventional blade fan

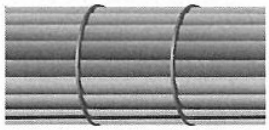

New Conical blade fan

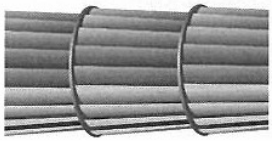

■ **Efficient**

Lambda-shaped heat exchanger with advanced design for wide suction area and a high performance adjusts the room temperature quickly, achieving COP. The gradation-design grill and larger top suction area also increase the efficiency of heat exchange with the concentrated opening area, to improve the efficiency of air intake.

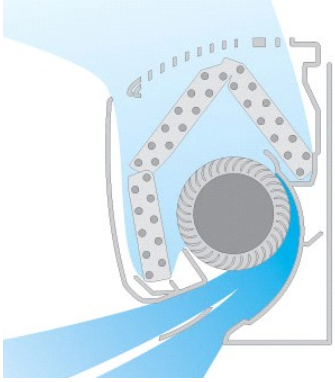

■ **Clean**

Static electricity and carbon absorb micro dust, pollen particles and odors, and the air purifying filter can be washed and re-used up to 20 times.

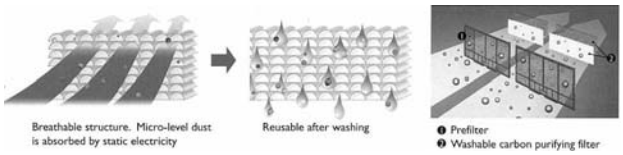

1.2.2 RAF - FLOOR TYPE

■ RAF-25NH5 , RAF-35NH5 & RAF-50NH5

Floor type with improved efficiency, noise-control performance and maintainability in addition to the streamlined style or symmetric rounded design. With upper and lower air outlets in two directions, every corner of the room can be warmed.

■ Comfortable heating

The airflow from upper and lower outlets heats the whole room evenly, even underneath your feet. The wider flap envelope you with comfortable air.

2-Way Airflow

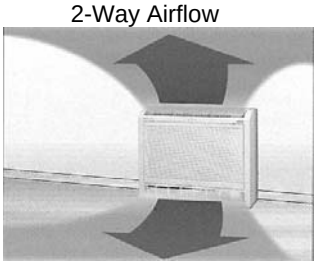

Large and gentle air flow is generated b the larger upper blades, achieving efficient air-conditioning.

■ High performance

The larger blade fan than normal rotates sufficient airflow slowly, thus achieving high efficiency and low noise

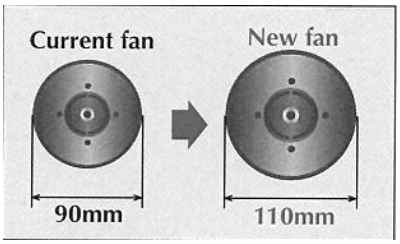

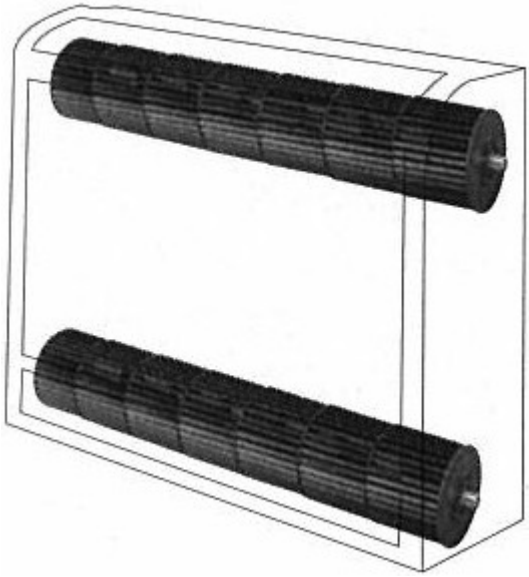

■ Easy Cleaning

You can remove pre-filter easily for washing or you can clean directly by vacuum cleaner. The filter catch 3 times more dust due to its wave shape, so you do not have to clean so often.

Pre-filter can be removed easily

New long life pre-filter

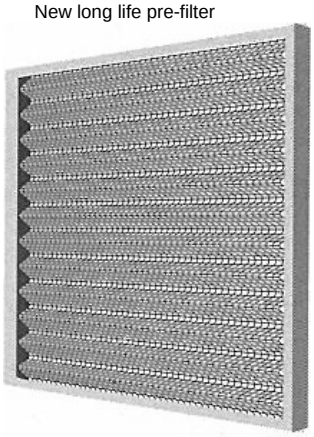

The dust collecting area is almost three times larger than that of conventional one.

1.2.3 RAI - Four Way Cassette Type

■ **Silent**

Noise level is just 25dB (Sleep mode) thanks to the 3D-twisted wing design of the compact turbo-fan.

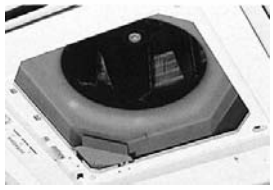

.

■ **Automatic Swing Louver**

Optionally, This unit is equipped with an automatic swing louver to ensure even distribution of conditioned air to the entire room.

■ **4 -Way Airflow**

Can select between 2-way, 3-way or 4-way operation.

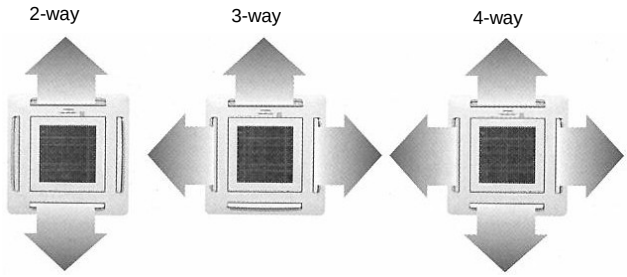

■ **Fits into a 600mm x 600mm ceiling module**

Thanks to compact design, it neatly fits inside a standard module and requires less installation work

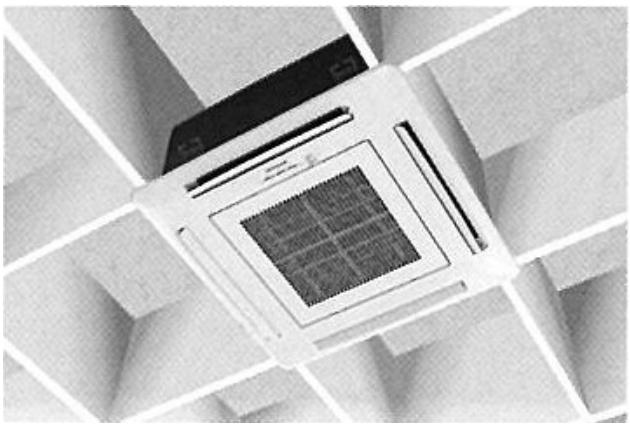

■ **One-touch panel**

The panel can be swung open up to 90° with just one push so that the filter can be removed for cleaning.

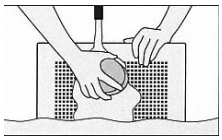

Grill can be removed for cleaning

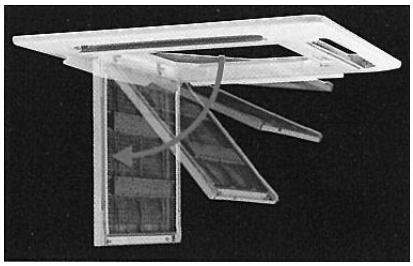

■ **Built-in Drain Pump**

The air conditioner is equipped with an internal drain pump to remove accumulated condensation water from drain pan even while it is operating. A float switch monitors the water level and automatically activates the pump as necessary.

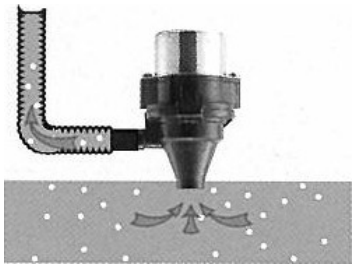

■ **Elegant Design**

The gently contoured standard air panel is less than 4 cm. It is tastefully designed to blend with any interior while delivering a maximum flow of air. The 32 cm profile of the hidden ceiling unit is low enough to allow unfettered installation in almost any building.

1.2.4 RAD - DUCT TYPE

■ Quiet Operation

The free duct enables the air inlet and outlet layout system to be freely chosen depending on the building structure and room width, thus keeping your room looking beautiful.

Unlike conventional units, the noise level has been reduced to an exceptionally low 30dB-A (1.0HP unit, Low position). Ideal wherever quiet operation is important.

■ Neatly installable in any room

Duct extendable for up to 4m. High-pressure switch setting delivers sufficient air conditioning even by duct installation.

Variation in installation

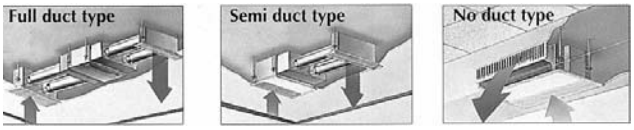

■ Static pressure & Air flow

Measuring conditions:

M3 : In case the duct is 4m long

M0 : For single indoor unit

■ Built-in drain pump

This air conditioner is equipped with an internal drain pump to remove accumulated condensation water from the drain pan even while it is operating. A float switch monitors the water level and automatically activates the pump as necessary.

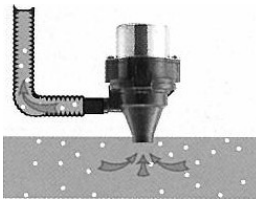

1.3 BENEFITS AND FEATURES OF SPLIT MODELS

Hitachi prides itself on providing high quality, efficient and reliable air conditioning solutions across the globe. By investing in Research and Development, Hitachi has been able to remain at the forefront of the industry with most extensive range available in the market today.

As would be expected of an organization such as ours, quality and efficiency of our products is imperative and have the utmost importance. Installers and users alike can rest assured that these are not the only parameters by which Hitachi products can be judged. Ecological thinking stems from the very first stages of new product design and continues throughout production and onto installation procedures, equipment and operation, with priority being given to the use of environmentally friendly refrigerants such as R410A.

Hitachi offers an extensive range of Room Air Conditioning Units suitable for domestic and light commercial applications.

1.3.1 SUMMIT RANGE

■ All PAM Inverter (RAC-50/60/70/80YH5)

Inverter driven systems have a big performance advantage over constant speed systems. The variable compressor can make a very fast start-up and reach the setting temperature rapidly, then reduce the rotation speed to achieve energy savings of about 30% with no loss of comfort. Moreover, only Hitachi's DC driven fans and compressors deliver about 10% better performance than AC inverters. HITACHI is the world's pioneer of DC inverter systems and PAM in room air conditioners.

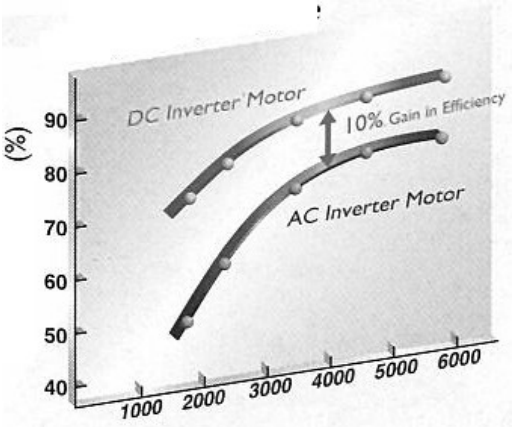

■ Inverter Control

Hitachi's PAM control system is able to keep the current pulse waveform to avoid distortion. It enhances the power efficiency. The cutting edge device is employed in HITACHI SUMMIT for your comfort and energy saving for our environment.

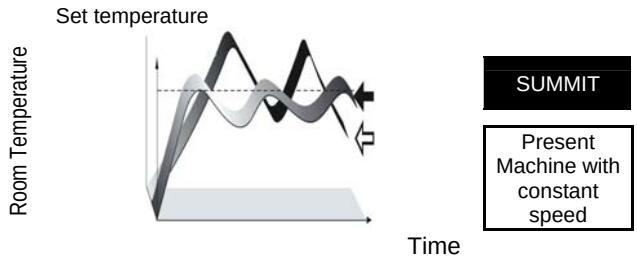

In case of SUMMIT quickly reaches set temperature with high power, then maintains stable energy-saving operation.

In case of Existing Machine with Constant Speed
Slowly reaches set temperature, then turns on and off repeatedly to maintain the temperature, causing uneconomical operation

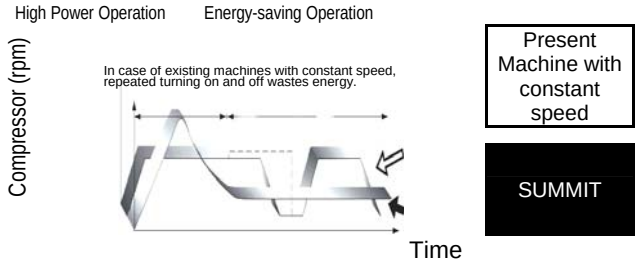

■ Auto-Restart

If auto-restart mode was selected at the ON/OFF switch, the unit automatically resumes operation in the mode that was in use beforehand:

■ Digital DC scroll compressor (for RAC-25/35YH5)

The motor uses digital control to maximize PAM control performance

- Loss during high-speed revolution is reduced, thanks to digital control of the motor.
- Three balancers mounted on the crankshaft lessen shaft run out during high-speed revolution.
- Efficient operation with drastically reduced refrigerant leakage is ensured by the automatic compression system, in which that tip of the slewing scroll is kept in absolute contact with the fixed scroll, in addition to special processing of the scroll surface.

■ Twin rotary compressor (for RAC-50/60/70/80YH5)

Hitachi's new twin rotary compressor has less vibration and higher efficiency than conventional rotary compressors

- Two rotating cylinders ensure well-balanced rotations unlike the conventional single rotary type, thus vibration noise is greatly reduced.
- The compressor's operation is improved by moving two independent cylinders efficiently

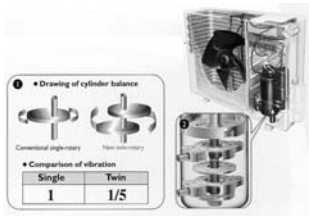

1.3.2 BIGFLOW RANGE

■ Rotary compressor

Hitachi's new rotary compressor has less vibration and higher efficiency than conventional rotary compressors. The Hitachi single split system offers a cost effective and efficient solution to climate control in one zone.

■ Auto-Restart

If auto-restart mode was selected at the ON/OFF switch, the unit automatically resumes operation in the mode that was in use beforehand.

■ Powerful

Newly developed super big flap delivers air quickly to every corner of the room, and the powerful, sweeping airflow eliminated dead zones and improves the cooling and heating effect.

■ Efficient

Lambda-shaped heat exchanger with advanced design for wide suction area and a high performance adjusts the room temperature quickly, achieving COP. The gradation-design grill and larger top suction area also increase the efficiency of heat exchange with the concentrated opening area, to improve the efficiency of air intake.

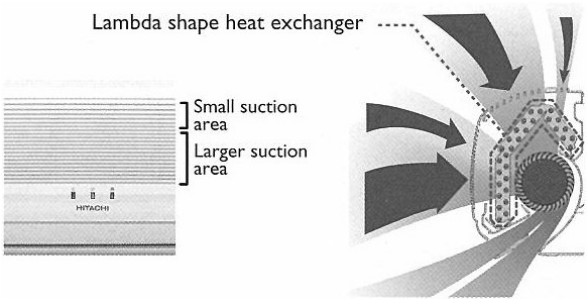

■ Clean

Static electricity and carbon absorb micro dust, pollen particles and odors, and the air purifying filter can be washed and re-used up to 20 times.

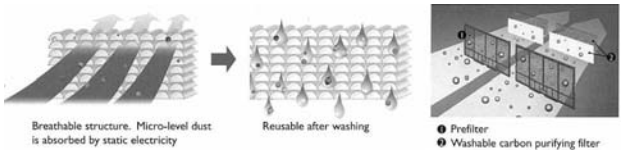

2 GENERAL DATA

CONTENTS

2 GENERAL DATA 2-1

2.1. Monozone/Multizone 2-2

2.1.1. Wall Type (RAK-18NH5/25NH5/35NH5/50NH5/65NH5) 2-2
2.1.2. Floor Type (RAF-25NH5/35NH5/50NH5) 2-3
2.1.3. 4 Way Ceiling Cassette Type (RAI-25NH5/35NH5/50NH5) 2-4
2.1.4. Duct Type (RAD-25NH5/35NH5) 2-5
2.1.5. Monozone Outdoor (RAC-25NH5/35NH5/50NH5/65NH5) 2-6
2.1.6. Multizone Outdoor (RAM-40QH5/55QH5/65QH5/72QH5/80QH5) 2-7

2.2. Summit/Bigflow 2-8

2.2.1. Summit Inverter (RAS-18YH5/25YH5/35YH5/50YH5/60YH5/70YH5/80YH5) 2-8
2.2.2. Summit Inverter (RAC-18YH5/25YH5/35YH5/50YH5/60YH5/70YH5/80YH5) 2-9
2.2.3. Bigflow Heatpump (RAS-07GH4/09GH4/14GH4/18GH4/24GH4) 2-12
2.2.4. Bigflow Heatpump (RAC-07GH4/09GH4/14GH4/18GH4/24GH4) 2-13
2.2.5. Bigflow Cooling (RAS-07G4/09G4/14G4/18G4/24G4) 2-14
2.2.6. Bigflow Cooling (RAC-07G4/09G4/14G4/18G4/24G4) 2-15

2.1. MONOZONE/MULTIZONE

2.1.1. WALL TYPE (RAK-18NH5/25NH5/35NH5/50NH5/65NH5)

Model RAK	Units	RAK-18NH5	RAK-25NH5	RAK-35NH5	RAK-50NH5	RAK-65NH5
Power Supply		From Outdoor Unit				
Nominal Cooling Capacity	kW	2.0(0.9-2.50)	2.5 (0.9-3.0)	3.5 (0.9-4.0)	5.0 (0.9-5.2)	6.05 (0.9-6.5)
Cooling Power Input	W	550 (155-1010)	695 (155-1050)	1080 (155-1280)	1 780 (155-2200)	2 300 (155-2500)
Nominal Heating Capacity	kW	2.50 (0.9-3.20)	3.5 (0.9-5.0)	4.8 (0.9-6.6)	6.5 (0.9-8.1)	7.05 (0.9-9.0)
Heating Power Input	W	580 (115-970)	900 (155-1400)	1320 (155-1920)	1 970 (115-2200)	2 400 (115-2700)
Dehumidifying capacity	L/h	1.2	1.4	1.8	2.8	3.5
Indoor Fan Air Flow Rate (Hi/Me/Lo)	m³/min	(C) 7.3 / 6.7 / 5.8 (H) 8.0 / 7.0 / 5.8	(C) 8.5 / 7.0 / 6.0 (H) 9.5 / 8.0 / 7.0	(C) 10.1 / 8.0 / 6.5 (H) 10.8 / 8.5 / 7.5	(C) 13.5 /10.0/6.8 (H) 13.5 /10.0/6.8	(C) 13.5/ 12.5/ 11.3 (H) 13.5/ 12.5/ 11.3
Fan Motor	W	25	25	25	25	35
Drain pump pressure lift	cm	-	-	-	-	-
Sound Pressure Level(Overall A Scale) (Hi/Me/Lo/Sleep)	dB	(C) 35-32-26-20 (H) 36-33-27-23	(C) 38-32-26-20 (H) 39-33-27-23	(C) 41-35-29-25 (H) 41-35-30-26	(C) 47-39-28-24 (H) 47-39-31-27	(C) 47-42-33-28 (H) 47-42-34-33
Refrigerant Type		R410A	R410A	R410A	R410A	R410A
Pipe sizes	mm	6.35 / 9.52	6.35 / 9.52	6.35 / 9.52	6.35 / 12.7	6.35 / 12.7
Pipe sizes	(in)	1/4, 3/8	1/4, 3/8	1/4, 3/8	1/4 , 1/2	1/4 , 1/2
Electrical Data						
Power Cable	No.	N/A	N/A	N/A	N/A	N/A
Cable Size	mm^2	N/A	N/A	N/A	N/A	N/A
Interconnection wires	No.	2 pcs + earth	2 pcs + Earth	2 pcs + Earth	2 pcs + Earth	2 pcs + Earth
Wire size	mm^2	2.0	2.0	2.0	2.0	2.0
Dimensions						
Width	mm	780	780	780	780	1 030
Height	mm	280	280	280	280	295
Depth	mm	210	210	210	210	191
Net Weight	Kg	9.5	9.5	9.5	9.5	11
Colour (Munsell Code)		Pearl White(N9.25)	Pearl White(N9.25)	Pearl White(N9.25)	Pearl White(N9.25)	Pearl White(N9.25)
Condensate Drain	mm	Ø16 OD	Ø16 OD	Ø16 OD	Ø16 OD	Ø16 OD
Features						
Auto restart	yes/no	Yes	Yes	Yes	Yes	Yes
Auto changeover	yes/no	Yes*	Yes*	Yes*	Yes*	Yes*
Air purifying filter type		SPX-CFH11	SPX-CFH11	SPX-CFH11	SPX-CFH11	SPX-CFH5

*Only for Monozone configuration , not applicable for Multizone.

NOTE:

1. *The nominal cooling and heating capacity is the combined capacity of the HITACHI standard split system, and are based on the JIS 158616.*

Operation Conditions		***Cooling***	***Heating***
Indoor Air Inlet Temperature	*dB*	*27.0 °C*	*20.0 °C*
	WB	*19.0 °C*	
Outdoor Air Inlet Temperature	*dB*	*35.0 °C*	*7.0 °C*
	WB		*6.0 °C*
***Piping Length**: 7.5 meters; **Piping Lift**: 0 meter* ***dB**: Dry Bulb; **WB**: Wet Bulb*			

2. *The Sound Pressure Level is based on the following conditions:*
   - *0.8 meter beneath indoor height center*
   - *1 meter from Discharge grille*

- The above data was measured in an anechoic chamber so that reflected sound should be taken into consideration when installing the unit.

2.1.2. FLOOR TYPE (RAF-25NH5/35NH5/50NH5)

Model RAF	Units	RAF-25NH5	RAF-35NH5	RAF-50NH5
Power Supply		From Outdoor Unit	From Outdoor Unit	From Outdoor Unit
Nominal Cooling Capacity	kW	2.5 (0.9-3.0)	3.5 (0.9-4.0)	5.0 (0.9-5.2)
Cooling Power Input	W	695 (155-1050)	1080 (155 -1280)	1 780 (155-2230)
Nominal Heating Capacity	kW	3.5 (0.9-5.0)	4.8 (0.9-6.6)	6.7 (0.9-8.1)
Heating Power Input	W	900 (115-1400)	1320 (115-1920)	1 850 (115-2700)
Dehumidifying capacity	L/h	1.4	1.8	2
Indoor Fan Air Flow Rate (Hi/Me/Lo)	m^3/min	(C) 7.2 / 5.0 / 4.5 (H) 8.7 / 7.5 / 6.2	(C) 9.5/5.5/5.0 (H) 10.8/8.5/7.2	(C) 10.3/8.5/6.0 (H) 12.3/10.0/7.5
Fan Motor	W	25	25	25
Drain pump pressure lift	cm	N/A	N/A	N/A-
Sound Pressure Level (Overall A Scale) (Hi/Me/Lo/Sleep)	dB	(C) 35-31-26-23 (H) 35-31-26-25	(C) 40-36-27-23 (H) 40-35-28-26	(C) 44-37-28-24 (H) 44-37-32-27
Refrigerant Type		R410A		
Pipe sizes	mm	6.35 / 9.52	6.35/9.52	6.35 / 12.7
Pipe sizes	(in)	1/4, 3/8	1/4,3/8	1/4 , 1/2
Electrical Data				
Power Cable	No.	N/A	N/A	N/A
Cable Size	mm^2	N/A	N/A	N/A
Interconnection wires	No.	2 pcs + Earth	2 pcs + Earth	2 pcs + Earth
wire size	mm^2	2.0	2.0	2.0
Dimensions				
Width	mm	750	750	750
Height	mm	570	570	570
Depth	mm	280	280	280
Net Weight	kg	38	38	38
Colour (Munsell Code)		Pearl White(N9.25)	Pearl White(N9.25)	Pearl White(N9.25)
Condensate Drain	mm	Ø16 OD	Ø16 OD	Ø16 OD
Features				
Auto restart	yes/no	Yes	Yes	Yes
Auto changeover	yes/no	Yes	Yes	Yes
Air purifying filter type		SPX-CFH5*	SPX-CFH5*	SPX-CFH5*

*Optional .(Not included)

NOTE:

1. *The nominal cooling and heating capacity is the combined capacity of the HITACHI standard split system, and are based on the JIS 158616.*

Operation Conditions		***Cooling***	***Heating***
Indoor Air Inlet Temperature	*dB*	*27.0 °C*	*20.0 °C*
	WB	*19.0 °C*	
Outdoor Air Inlet Temperature	*dB*	*35.0 °C*	*7.0 °C*
	WB		*6.0 °C*
***Piping Length**: 7.5 meters; **Piping Lift**: 0 meter* ***dB**: Dry Bulb; **WB**: Wet Bulb*			

2. *The Sound Pressure Level is based on the following conditions:*
   - *Half height of the unit*
   - *1 meter from Discharge grille*

- The above data was measured in an anechoic chamber so that reflected sound should be taken into consideration when installing the unit.

2.1.3. 4 WAY CEILING CASSETTE TYPE (RAI-25NH5/35NH5/50NH5)

Model RAI	Units	RAI-25NH5	RAI-35NH5	RAI-50NH5	RAI-ECPM
Power Supply		From Outdoor Unit			Optional Panel
Nominal Cooling Capacity	kW	2.5 (0.9-3.0)	3.5 (0.9-4.0)	5.0(0.9-5.2)	
Cooling Power Input	W	695 (155-1050)	1 100 (155-1280)	1990 (155-2200)	
Nominal Heating Capacity	kW	3.5 (0.9-5.0)	4.8 (0.9-6.6)	6.5(0.9-8.1)	
Heating Power Input	W	940 (155-1400)	1 360 (115-1920)	2160 (155-2700)	
Dehumidifying capacity	L/h	1.4	1.8	2	
Indoor Fan Air Flow Rate (Hi/Me/L	m³/min	(C)8.5 / 7.0 / 5.8 (H) 8.5 / 7.0 / 5.8	(C) 10.8 / 8.0 / 5.8 (H) 10.8 / 8.0 / 5.8	(C) 12.0 / 8.0 / 5.8 (H) 12.0 / 8.0 / 5.8	
Fan Motor	W	25	25	25	
Drain pump pressure lift	cm	30 max	30 max	30 max	
Sound Pressure Level (Overall A Scale) (Hi/Me/Lo/Sleep)	dB	(C) 35-32-29-25 (H) 36-33-30-27	(C) 39-34-29-26 (H) 40-36-32-29	(C) 43-35-32-29 (H) 43-36-32-30	
Refrigerant Type		R410A			
Pipe sizes	mm	6.35 / 9.52	6.35 / 9.52	6.35/12.7	
Pipe sizes	(in)	1/4, 3/8	1/4, 3/8	1/4 , 1/2	
Electrical Data					
Power Cable	No.	N/A	N/A	N/A	
Cable Size	mm^2	N/A	N/A	N/A	
Interconnection wires	No.	2 pcs + Earth	2 pcs + Earth	2 pcs + Earth	
wire size	mm^2	2.0	2.0	2.0	
Dimensions					
Width	mm	580	580	580	650
Height	mm	285	285	285	32
Depth	mm	580	580	580	650
Net Weight	kg	20	20	20	4
Colour (Munsell Code)		Optional panel (RAI-ECPM)			Pearl White(N9.25)
Condensate Drain	mm	Ø16 OD	Ø16 OD	Ø16 OD	
Features					
Auto restart	yes/no	Yes	Yes	Yes	
Auto changeover	yes/no	Yes*	Yes*	Yes*	
Air purifying filter type		SPX-CFH5	SPX-CFH5	SPX-CFH5	SPX-CFH5

* Only for Monozone configuration , not applicable for Multizone.

NOTE:

1. *The nominal cooling and heating capacity is the combined capacity of the HITACHI standard split system, and are based on the JIS 158616.*

Operation Conditions		***Cooling***	***Heating***
Indoor Air Inlet Temperature	*dB*	*27.0 °C*	*20.0 °C*
	WB	*19.0 °C*	
Outdoor Air Inlet Temperature	*dB*	*35.0 °C*	*7.0 °C*
	WB		*6.0 °C*
***Piping Length**: 7.5 meters; **Piping Lift**: 0 meter* ***dB**: Dry Bulb; **WB**: Wet Bulb*			

2. *The Sound Pressure Level is based on the following conditions:*

   - *1.4 meter beneath the Unit*

- The above data was measured in an anechoic chamber so that reflected sound should be taken into consideration when installing the unit.

2.1.4. DUCT TYPE (RAD-25NH5/35NH5)

Model RAD	Units	RAD-25NH5	RAD-35NH5
Power Supply		From Outdoor Unit	From Outdoor Unit
Nominal Cooling Capacity	kW	2.5 (0.9-3.0)	3.5 (0.9-4.0)
Cooling Power Input	W	695 (155-1050)	1 240 (155-1280)
Nominal Heating Capacity	kW	3.5 (0.9-5.5)	4.8 (0.9-6.6)
Heating Power Input	W	970 (115-1400)	1 700 (115-1920)
Dehumidifying capacity	L/h	1.4	2.1
Indoor Fan Air Flow Rate (Hi/Me/Lo)	m³/min	(C) 8.2 / 7.3 / 6.2 (H) 9.2 / 7.5 / 6.2	(C) 8.2 / 7.3 / 6.2 (H) 9.2 / 7.5 / 6.2
Fan Motor	W	20	20
Drain pump pressure lift	cm	30 max	30 max
Sound Pressure Level (Overall A Scale) (Hi/Me/Lo/Sleep)	dB	(C) 40-34-31-29 (H) 41-39-37-30	(C) 42-34-31-29 (H) 42-39-37-30
Refrigerant Type		R410A	
Pipe sizes	mm	6.35 / 9.52	6.35 / 9.52
Pipe sizes	(in)	1/4, 3/8	1/4, 3/8
Electrical Data			
Power Cable	No.	N/A	N/A
Cable Size	mm^2	N/A	N/A
Interconnection wires	No.	2 pcs + Earth	2 pcs + Earth
wire size	mm^2	2.0	2.0
Dimensions			
Width	mm	750	750
Height	mm	235	235
Depth	mm	400	400
Net Weight	kg	19	19
Colour (Munsell Code)		Pearl White(N9.25)	Pearl White(N9.25)
Condensate Drain	mm	Ø16 OD	Ø16 OD
Features			
Auto restart	yes/no	Yes	Yes
Auto changeover	yes/no	Yes*	Yes*
Air purifying filter type		N/A	N/A

* Only for Monozone configuration , not applicable for Multizone.

NOTE:

1. *The nominal cooling and heating capacity is the combined capacity of the HITACHI standard split system, and are based on the JIS 158616.*

Operation Conditions		***Cooling***	***Heating***
Indoor Air Inlet Temperature	*dB*	*27.0 °C*	*20.0 °C*
	WB	*19.0 °C*	
Outdoor Air Inlet Temperature	*dB*	*35.0 °C*	*7.0 °C*
	WB		*6.0 °C*

***Piping Length**: 7.5 meters; **Piping Lift**: 0 meter*
***dB**: Dry Bulb; **WB**: Wet Bulb*

2. *The Sound Pressure Level is based on the following conditions:*

- *1.4 meter beneath the Unit*

- The above data was measured in an anechoic chamber so that reflected sound should be taken into consideration when installing the unit.

2.1.5. MONOZONE OUTDOOR (RAC-25NH5/35NH5/50NH5/65NH5)

Model RAC		RAC-25NH5	RAC-35NH5	RAC-50NH5	RAC-65NH5
Power Supply		AC 1f, 220-240V, 50Hz			
Nominal Cooling Capacity	kW	Refer indoor	Refer indoor	Refer indoor	Refer indoor
Cooling Power Input	W	Refer indoor	Refer indoor	Refer indoor	Refer indoor
Nominal Heating Capacity	kW	Refer indoor	Refer indoor	Refer indoor	Refer indoor
Heating Power Input	W	Refer indoor	Refer indoor	Refer indoor	Refer indoor
Sound Pressure Level		(C)46	(C)47	(C)50	(C)50
(Overall A Scale)	dB	(H)46	(H)49	(H)52	(H)53
Starting current	A	4.2	4.2	10	10
Recommended fuse size	A	16	16	16	16
Power Cable	No.	2 pcs + Earth	2 pcs + Earth	2 pcs + Earth	2 pcs + Earth
Cable Size	mm^2	2.0	2.0	2.0	2.0
Interconnection wires	No.	2 pcs + Earth	2 pcs + Earth	2 pcs + Earth	2 pcs + Earth
Wire size	mm^2	2.0	2.0	2.0	2.0
Dimensions					
Width	mm	750	750	850	850
Height	mm	570	570	650	650
Depth	mm	280	280	298	298
Net Weight	kg	38	38	45	45
Cabinet		Synthetic Resin Paint Baked on Galvanised Steel Plate			
Colour (Munsell Code)		Beige (2.5Y 8/2)			
System					
Refrigerant Flow Control		Micro-Computer Control Expansion Valve			
Compressor		DC Twin Rotary	DC Twin Rotary	DC Twin Rotary	DC Twin Rotary
Compressor oil type		HAF68D1	HAF68D1	HAF68D1	HAF68D1
		1.05 at 20°C	1.05 at 20°C	1.05 at 20°C	1.05 at 20°C
Compressor coil resistance	MΩ	1.28 at 75°C	1.28 at 75°C	1.28 at 75°C	1.28 at 75°C
Condenser Fan		Propeller Fan			
Quantity		1	1	1	1
Air flow rate (C/H)	m³/min	27/27	27/27	36/36	36/36
Refrigerant Piping		Flare-Nut and/or Flange Connection (Factory supplied)			
	mm	Ø6.35	Ø6.35	Ø6.35	Ø6.35
Liquid Line	(in.)	(1/4)	(1/4)	(1/4)	(1/4)
	mm	Ø9.52	Ø9.52	Ø12.70	Ø12.70
Gas Line	(in.)	(3/8)	(3/8)	(1/2)	(1/2)
Piping length max/height	m	20/10	20/10	20/10	30/10
Chargeless pipe length	m	20	20	20	20
Additional charge	g/m	-	-	-	5
Individual pipe length		-	-	-	-
Refrigerant Type		R410A			
Refrigerant Charge	gram	1150	1150	1400	1420

*Power cables are not included; please install the unit with cable sizes that comply with local regulations.

NOTE:

1. *The Sound Pressure Level is based on the following conditions:*

- *1 meter from the unit front surface and 1 meter from floor level*

The above data was measured in an anechoic chamber so that reflected sound should be taken into consideration when installing the unit.

Conditions : as designed in Eurovent for sound testing

In case of night shifts conditions , the noise level decrease 2 dB (A)

1. *The Sound Pressure Level is based on the following conditions:*

1 meter from the unit front surface and 1 meter from floor level

2.1.6. MULTIZONE OUTDOOR (RAM-40QH5/55QH5/65QH5/72QH5/80QH5)

Model RAM		RAM-40QH5	RAM-55QH5	RAM-65QH5	RAM-72QH5	RAM-80QH5
Power Supply		AC 1Ph, 220-230-240V, 50Hz				
Nominal Cooling Capacity	kW	4.0(1.50-4.5)	5.4 (1.5-5.9)	6.3 (1.5-6.6)	7.1 (2.4-8.8)	8.0 (3.0-9.2)
Cooling Power Input	W	1245 (200-1800)	1795 (200-1980)	2095 (200-2200)	2180(650-3180)	2650 (650-3200)
Nominal Heating Capacity	kW	5.0(1.5-5.6)	7.2 (1.5-7.2)	7.2 (1.5-7.2)	8.6 (2.8-9.5)	11.0 (3.0-12.4)
Heating Power Input	W	1350 (200-1780)	2100 (200-2100)	2080 (200-2100)	2480 (620-3520)	2630 (620-3630)
Sound Pressure Level	dB	(C)49	(C)52	(C)52	(C)55	(C)43
(Overall A Scale)		(H)51	(H)53	(H)53	(H)55	(H)43
Starting current	A	10	10	10	16	14.5
Recommended fuse size	A	16	16	16	30	16
Power Cable	No.	2 pcs + Earth	2 pcs + Earth	2 pcs + Earth	2 pcs + Earth	2 pcs + Earth
Cable Size	mm^2	4.0	4.0	4.0	4.0	4.0
Interconnection wires	No.	2 pcs + Earth	2 pcs + Earth	2 pcs + Earth	2 pcs + Earth	2 pcs + Earth
Wire size	mm^2	2.0	2.0	2.0	2.0	2.0
Dimensions						
Width	mm	750	850	850	850	850
Height	mm	570	650	650	800	830
Depth	mm	280	298	298	298	340
Net Weight	kg	40	50	50	55	79
Cabinet		Synthetic Resin Paint Baked on Galvanised Steel Plate				
Colour (Munsell Code)		Beige (2.5Y 8/2)				
System						
Refrigerant Flow Control		Micro-Computer Control Expansion Valve				
Compressor		DC Twin Rotary				DC Scroll
Compressor oil type		HAF68D1	HAF68D1	HAF68D1	HAF68D1	HAF68D1
Compressor coil resistance	MΩ	1.063 at 25°C	1.063 at 25°C	1.063 at 25°C	1.063 at 25°C	0.83 at 20°C
		1.268 at 75°C	1.268 at 75°C	1.268 at 75°C	1.268 at 75°C	1.01 at 75°C
Condenser Fan		Propeller Fan				
Quantity		1	1	1	1	1
Air flow rate (C/H)	m^3/min	27/27	36/36	36/36	45/45	43/49
Refrigerant Piping		Flare-Nut and/or Flange Connection (Factory supplied)				
Liquid Line	mm	Ø6.35x2	Ø6.35x2	Ø6.35x3	Ø6.35x4	Ø6.35x4
	(in.)	(1/4)	(1/4)	(1/4)	(1/4)	(1/4)
Gas Line	Mm	Ø9.52x2	Ø9.52x2	Ø9.52x3	Ø9.52x4	Ø9.52x4
	(in.)	(3/8)	(3/8)	(3/8)	(3/8)	(3/8)
Piping length max/height	m	35/10	35/10	45/10	60/10	70/10
Chargeless pipe length	m	35	35	35	30	35+35
Additional charge	g/m	-	-	20	20	-
Individual pipe length		25	25	25	25	25
Refrigerant Type		R410A				
Refrigerant Charge	gram	1650	1650	1650	2300	CompA 1450 CompB 1450

*Power cables are not included; please install the unit with cable sizes that comply with local regulations.

2.2. SUMMIT/BIGFLOW

2.2.1. SUMMIT INVERTER (RAS-18YH5/25YH5/35YH5/50YH5)

Model RAS	Units	RAS-18YH5	RAS-25YH5	RAS-35YH5	RAS-50YH5
Power Supply		AC 1ϕ, 220-230V, 50Hz			
Nominal Cooling Capacity	kW	2.0 (0.9-2.5)	2.5 (0.9-3.1)	3.5 (0.9-4.0)	5.0 (0.9-5.2)
Cooling Power Input	W	550 (155-1010)	580 (155-1080)	980(155-1300)	1780 (155-2200)
Nominal Heating Capacity	kW	2.5 (0.9-3.2)	3.4 (0.9-4.4)	4.2 (0.9-5.0)	6.5 (0.9-8.1)
Heating Power Input	W	580 (115 -970)	790 (115-1120)	1010 (115-1300)	1970 (115-2200)
Dehumidifying capacity	L/h	1.2	1.4	1.6	2.8
Indoor Fan Air Flow Rate (Hi/Me/Lo)	m³/min	(C) 7.3/6.7/5.8 (H) 8.0/7.0/5.8	(C) 8.5 / 7.0 / 6.0 (H) 9.5 / 8.0 / 7.0	(C) 10.1 / 8.0 / 6.5 (H) 10.8 / 8.5 / 7.5	(C) 13.5/10.0/6.8 (H) 13.5/10.0/6.8
Fan Motor	W	25	25	25	28
Drain pump pressure lift	cm	N/A	N/A	N/A	N/A
Sound Pressure Level (Overall A Scale) (Hi/Me/Lo/Sleep)	dB	(C) 35-32-26-20 (H) 36-33-27-23	(C) 38-32-26-20 (H) 39-33-27-23	(C) 41-35-29-25 (H) 41-35-30-26	(C) 47-39-28-24 (H) 47-39-31-27
Refrigerant Type		R410A	R410A	R410A	R410A
Pipe sizes	mm	6.35 / 9.52	6.35 / 9.52	6.35 / 9.52	6.35 / 12.7
Pipe sizes	(in)	1/4, 3/8	1/4, 3/8	1/4, 3/8	1/4, 1/2
Electrical Data					
Power Cable	No.	2 pcs + Earth	2 pcs + Earth	2 pcs + Earth	2 pcs + Earth
Cable Size	mm^2	2.0	2.0	2.0	2.0
Interconnection wires	No.	2 pcs + Earth when power source to Outdoor 4 pcs + Earth when power source to Indoor	2 pcs + Earth when power source to Outdoor 4 pcs + Earth when power source to Indoor	2 pcs + Earth when power source to Outdoor 4 pcs + Earth when power source to Indoor	2 pcs + Earth when power source to Outdoor
wire size	mm^2	2.0	2.0	2.0	2.0
Dimensions					
Width	mm	780	780	780	780
Height	mm	280	280	280	280
Depth	mm	210	210	210	210
Net Weight	kg	9.5	9.5	9.5	9.5
Colour (Munsell Code)		Pearl White(N9.25)	Pearl White(N9.25)	Pearl White(N9.25)	Pearl White(N9.25)
Condensate Drain	mm	Ø16 OD	Ø16 OD	Ø16 OD	Ø16 OD
Features					
Auto restart	yes/no	Yes	Yes	Yes	Yes
Auto changeover	yes/no	Yes	Yes	Yes	Yes
Air purifying filter type		SPX-CFH11	SPX-CFH11	SPX-CFH11	SPX-CFH11

*Power cables are not included; please install the unit with cable sizes that comply with local regulations.

NOTE:

1. *The nominal cooling and heating capacity is the combined capacity of the HITACHI standard split system, and are based on the JIS 158616.*

Operation Conditions		*Cooling*	*Heating*
Indoor Air Inlet Temperature	*dB*	*27.0 °C*	*20.0 °C*
	WB	*19.0 °C*	
Outdoor Air Inlet Temperature	*dB*	*35.0 °C*	*7.0 °C*
	WB		*6.0 °C*
***Piping Length**: 7.5 meters; **Piping Lift**: 0 meter* ***dB**: Dry Bulb; **WB**: Wet Bulb*			

2. *The Sound Pressure Level is based on the following conditions:*
   - *0.8 meter beneath indoor height center*
   - *1 meter from Discharge grille*

- The above data was measured in an anechoic chamber so that reflected sound should be taken into consideration when installing the unit.

2.2.2. SUMMIT INVERTER (RAC-18YH5/25YH5/35YH5/50YH5)

Model RAC		RAC-18YH5	RAC-25YH5	RAC-35YH5	RAC-50YH5
Power Supply		AC 1ϕ, 220-230V, 50Hz			
Nominal Cooling Capacity	kW	2.0 (0.9-2.5)	2.5 (0.9-3.1)	3.5 (0.9-4.0)	5.0 (0.9-5.2)
Cooling Power Input	W	550 (155-1010)	580 (155-1080)	980 (155-1300)	1780 (155-2200)
Nominal Heating Capacity	KW	2.5 (0.9-3.2)	3.4 (0.9-4.4)	4.2 (0.9-5.0)	6.5 (0.9-8.1)
Heating Power Input	W	580 (115 -970)	790 (115-1120)	1010 (115-1300)	1970 (115-2200)
Sound Pressure Level (Overall A Scale) (dB)	C	44	45	46	50
	H	46	46	47	52
Starting current	A	2.81	3.72	4.49	10
Recommended fuse size	A	16	16	16	16
Power Cable	No.	2 pcs + Earth	2 pcs + Earth	2 pcs + Earth	2 pcs + Earth
Cable Size	mm^2	1.25	1.25	1.25	1.25
Interconnection wires	No.	2 pcs + Earth	2 pcs + Earth	2 pcs + Earth	2 pcs + Earth
Wire size	mm^2	2.0	2.0	2.0	2.0
Dimensions					
Width	mm	750	750	750	850
Height	mm	548	548	548	650
Depth	mm	288	288	288	298
Net Weight	kg	35	35	35	45
Cabinet		Synthetic Resin Paint Baked on Galvanised Steel Plate			
Colour (Munsell Code)		Beige (2.5Y 8/2)			
System					
Refrigerant Flow Control		Micro-Computer Control Expansion Valve			
Compressor		Rotary	DC Scroll	DC Scroll	Twin Rotary
Compressor oil type		RB68A	HAF68D1	HAF68D1	RB68A
Compressor coil resistance	MΩ	1.05 at 20°C 1.28 at 75°C	1.15 at 20° 1.40 at 75°	1.15 at 20° 1.40 at 75°	1.05 at 20°C 1.28 at 75°C
		N/A	N/A	N/A	128 at 75°C
Condenser Fan		Propeller Fan			
Quantity		1	1	1	1
Air flow rate (C/H)	m^3/min	24/23	31/27	32/27	36/36
Refrigerant Piping		Flare-Nut and/or Flange Connection (Factory supplied)			
Liquid Line	mm	Ø6.35	Ø6.35	Ø6.35	Ø6.35
	(in.)	(1/4)	(1/4)	(1/4)	(1/4)
Gas Line	mm	Ø9.52	Ø9.52	Ø9.52	Ø12.70
	(in.)	(3/8)	(3/8)	(3/8)	(1/2)
Piping length max/height	m	20/10	20/10	20/10	20/10
Chargeless pipe length	m	20	20	20	20
Additional charge	g/m	-	-	-	-
Individual pipe length		-	-	-	-
Refrigerant Type		R410A	R410A	R410A	R410A
Refrigerant Charge	Gram	870	870	870	1400

*Power cables are not included; please install the unit with cable sizes that comply with local regulations.

2.2.3. SUMMIT INVERTER (RAS-60YH5/70YH5/80YH5)

Model RAS	Units	RAS-60YH5	RAS-70YH5	RAS-80YH5
Power Supply		AC 1ϕ, 220-230V, 50Hz		
Nominal Cooling Capacity	kW	6.05(0.9-6.5)	7.0 (0.9-8.0)	8.0 (1.5-8.5)
Cooling Power Input	W	2300 (155-2500)	2670(200-2920)	3070(200-3850)
Nominal Heating Capacity	kW	7.05 (0.9-9.0)	8.2 (0.9-9.5)	9.3 (1.5-9.7)
Heating Power Input	W	2400 (115 -2700)	2770 (200-3250)	3100 (200-3850)
Dehumidifying capacity	L/h	2.8	4.5	5.2
Indoor Fan Air Flow Rate (Hi/Me/Lo)	m^3/min	13.5/12.5/11.3	(C) 14.0 / 12.5 / 11.3	(C) 19.0 / 16.5 / 13.5
Fan Motor	W	25	25	25
Drain pump pressure lift	cm	N/A	N/A	N/A
Sound Pressure Level (Overall A Scale) (Hi/Me/Lo/Sleep)	dB	(C) 47-42-33-28 (H) 47-42-34-33	(C) 48-42-33/30 (H) 49-42-33/30	(C) 46-43-40-36 (H) 47-44-41-39
Refrigerant Type		R410A	R410A	R410A
Pipe sizes	mm	6.35 / 12.7	6.35 / 15.8	6.35 / 15.8
Pipe sizes	(in)	1/4, 1/2	1/4, 5/8	1/4, 5/8
Electrical Data				
Power Cable	No.	2 pcs + Earth	2 pcs + Earth	2 pcs + Earth
Cable Size	mm^2	2.0	2.0	2.0
Interconnection wires	No.	2 pcs + Earth when power source to Outdoor	2 pcs + Earth when power source to Outdoor	2 pcs + Earth when power source to Outdoor
wire size	mm^2	2.0	2.0	2.0
Dimensions				
Width	mm	1030	1030	1150
Height	mm	295	295	333
Depth	mm	191	191	245
Net Weight	kg	11	12	15
Colour (Munsell Code)		Pearl White(N9.25)	Pearl White(N9.25)	Pearl White(N9.25)
Condensate Drain	mm	Ø16 OD	Ø16 OD	Ø16 OD
Features				
Auto restart	yes/no	Yes	Yes	Yes
Auto changeover	yes/no	Yes	Yes	Yes
Air purifying filter type		SPX-CFH5	SPX-CFH5	SPX-CFH13

2.2.4. SUMMIT INVERTER (RAC-60YH5/70YH5/80YH5)

Model RAC		RAC-60YH5	RAC-70YH5	RAC-80YH5
Power Supply		AC 1ϕ, 220-230V, 50Hz		
Nominal Cooling Capacity	kW	6.05 (0.9-6.5)	7.0 (0.9-8.0)	8.0(1.5-8.5)
Cooling Power Input	W	2300 (155-2500)	2670 (200-2920)	3070 (200-3850)
Nominal Heating Capacity	KW	7.05(0.9-9.0)	8.2 (0.9-9.5)	9.3 (1.5-9.7)
Heating Power Input	W	2400 (115 -2700)	2770 (200-3250)	3100 (200-3850)
Sound Pressure Level (Overall A Scale) (dB)	C	50	52	55
	H	53	54	57
Starting current	A	10.30	11.80	12.90
Recommended fuse size	A	16	20	30
Power Cable	No.	2 pcs + Earth	2 pcs + Earth	2 pcs + Earth
Cable Size	mm^2	1.25	1.25	1.25
Interconnection wires	No.	2 pcs + Earth	2 pcs + Earth	2 pcs + Earth
Wire size	mm^2	2.0	2.0	2.0
Dimensions				
Width	mm	850	850	925
Height	mm	650	800	875
Depth	mm	298	298	315
Net Weight	kg	45	52	75
Cabinet		Synthetic Resin Paint Baked on Galvanised Steel Plate		
Colour (Munsell Code)		Beige (2.5Y 8/2)		
System				
Refrigerant Flow Control		Micro-Computer Control Expansion Valve		
Compressor		Twin Rotary	Twin Rotary	Twin Rotary
Compressor oil type		RB68A	RB68A	RB68A
Compressor coil resistance	MΩ	1.05 at 20°C 1.28 at 75°C	1.05 at 20°C 1.28 at 75°C	1.05 at 20°C 1.28 at 75°C
		N/A	N/A	N/A
Condenser Fan		Propeller Fan		
Quantity		1	1	1
Air flow rate (C/H)	m^3/min	36/36	47/47	55/55
Refrigerant Piping		Flare-Nut and/or Flange Connection (Factory supplied)		
Liquid Line	mm	Ø6.35	Ø6.35	Ø6.35
	(in.)	(1/4)	(1/4)	(1/4)
Gas Line	mm	Ø12.7	Ø15.88	Ø15.88
	(in.)	(1/2)	(5/8)	(5/8)
Piping length max/height	m	30/10	30/10	30/10
Chargeless pipe length	m	20	20	20
Additional charge	g/m	5	10	20
Individual pipe length		-	-	-
Refrigerant Type		R410A	R410A	R410A
Refrigerant Charge	Gram	1420	1800	1800

*Power cables are not included; please install the unit with cable sizes that comply with local regulations.

2.2.5. BIGFLOW HEATPUMP (RAS-07GH4/09GH4/14GH4/18GH4/24GH4)

Model RAS	Units	RAS-07GH4	RAS-09GH4	RAS-14GH4	RAS-18GH4	RAS-24GH4
Power Supply		AC 1ϕ, 220-230-240V, 50Hz				
Nominal Cooling Capacity	kW	2.1	2.9	3.5	5.1	6.6
Cooling Power Input	W	610	900	1 090	1 580	2 490
Nominal Heating Capacity	kW	2.2	3.0	3.85	5.75	7.6
Heating Power Input	W	510	770	1 000	1 680	2 660
Dehumidifying capacity	L/h	1.2	1.4	1.8	2.8	3.5
Indoor Fan Air Flow Rate (Hi/Me/Lo)	m³/min	8.0 / 6.5 / 5.0	9.0 / 7.5 / 6.0	10.0 / 8.5 / 7.0	13.5 / 12.5 / 11.3	13.5 / 12.5 / 11.3
Fan Motor	W	20	20	20	30	30
Drain pump pressure lift	cm	N/A	N/A	N/A	N/A	N/A
Sound Pressure Level (Overall A Scale) (Hi/Me/Lo/Sleep)	dB	(C) 36-30-25-23 (H) 36-32-28-28	(C) 38-35-28-24 (H) 39-34-31-31	(C) 41-36-31-27 (H) 42-37-34-34	(C) 45-42-39-36 (H) 45-39-36-36	(C) 45-42-40-38 (H) 45-42-40-40
Refrigerant Type		R410A				
Pipe sizes	mm	6.35 / 9.52	6.35 / 9.52	6.35 / 9.52	6.35 / 12.7	6.35 / 12.7
Pipe sizes	(in)	1/4, 3/8	1/4, 3/8	1/4, 3/8	1/4 , 1/2	1/4 , 1/2
Electrical Data						
Power Cable	No.	2 pcs + Earth	2 pcs + Earth	2 pcs + Earth	2 pcs + Earth	2 pcs + Earth
Cable Size	mm^2	2.0	2.0	2.0	2.0	2.0
Interconnection wires	No.	4 pcs + Earth	4 pcs + Earth	4 pcs + Earth	4 pcs + Earth	4 pcs + Earth
wire size	mm^2	2.0	2.0	2.0	2.0	2.0
Dimensions						
Width	mm	780	780	780	1030	1030
Height	mm	280	280	280	295	295
Depth	mm	210	210	210	183	183
Net Weight	kg	9	9	9	12	12
Colour (Munsell Code)		Pearl White(N9.25)	Pearl White(N9.25)	Pearl White(N9.25)	Pearl White(N9.25)	Pearl White(N9.25)
Condensate Drain	mm	Ø16 OD	Ø16 OD	Ø16 OD	Ø16 OD	Ø16 OD
Features						
Auto restart	yes/no	Yes	Yes	Yes	Yes	Yes
Auto changeover	yes/no	No	No	No	No	No
Air purifying filter type		SPX-CFH11	SPX-CFH11	SPX-CFH11	SPX-CFH5	SPX-CFH5

NOTE:

1. *The nominal cooling and heating capacity is the combined capacity of the HITACHI standard split system, and are based on the JIS 158616.*

Operation Conditions		***Cooling***	***Heating***
Indoor Air Inlet Temperature	*dB*	*27.0 °C*	*20.0 °C*
	WB	*19.0 °C*	
Outdoor Air Inlet Temperature	*dB*	*35.0 °C*	*7.0 °C*
	WB		*6.0 °C*
***Piping Length**: 7.5 meters; **Piping Lift**: 0 meter* ***dB**: Dry Bulb; **WB**: Wet Bulb*			

2. *The Sound Pressure Level is based on the following conditions:*
   - *0.8 meter beneath indoor height center*
   - *1 meter from Discharge grille*

- The above data was measured in an anechoic chamber so that reflected sound should be taken into consideration when installing the unit.

2.2.6. BIGFLOW HEATPUMP (RAC-07GH4/09GH4/14GH4/18GH4/24GH4)

Model RAC		RAC-07GH4	RAC-09GH4	RAC-14GH4	RAC-18GH4	RAC-24GH4
Power Supply		From indoor				
Nominal Cooling Capacity	kW	2.1	2.9	3.5	5.1	6.5
Cooling Power Input	W	610	900	1090	1580	2490
Nominal Heating Capacity	kW	2.2	3.0	3.85	5.75	7.6
Heating Power Input	W	510	770	1000	1680	2660
Sound Pressure Level	dB	45	48	49	50	54
(Overall A Scale)		46	49	50	52	54
Starting current	A	22	22	30	45	67
Recommended fuse size	A	10	10	15	20	30
Power Cable	No.	-	-	-	-	-
Cable Size	mm^2	-	-	-	-	-
Interconnection wires	No.	4 pcs + Earth	4 pcs + Earth	4 pcs + Earth	4 pcs + Earth	4 pcs + Earth
Wire size	mm^2	2.0	2.0	2.0	2.0	2.0
Dimensions						
Width	mm	700	700	750	850	850
Height	mm	570	570	570	650	650
Depth	mm	210	210	280	298	298
Net Weight	kg	25	27	35	49	55
Cabinet		Synthetic Resin Paint Baked on Galvanised Steel Plate				
Colour (Munsell Code)		Beige (2.5Y 8/2)				
System						
Refrigerant Flow Control		Capillary				
Compressor		Rotary				
Compressor oil type		RB68A	RB68A	RB68A	RB68A	RB68A
Compressor coil resistance	MΩ	R1=5.23 R2=5.62 At 20°C	R1=3.19 R2=4.62 At 20°C	R1=2.83 R2=5.41 At 20°C	R1=1.78 R2=2.18 At 20°C	R1=0.83 R2=2.28 At 20°C
		R1=6.36 R2=6.84 At 75°C	R1=3.88 R2=5.62 At 75°C	R1=3.44 R2=6.58 At 75°C	R1=2.16 R2=2.64 At 75°C	R1=1.01 R2=2.75 At 75°C
Condenser Fan		Propeller Fan				
Quantity		1	1	1	1	1
Air flow rate (C/H)	m^3/min	24/24	24/24	27/27	36/36	36/36
Refrigerant Piping		Flare-Nut and/or Flange Connection (Factory supplied)				
Liquid Line	mm	Ø6.35	Ø6.35	Ø6.35	Ø6.35	Ø6.35
	(in.)	(1/4)	(1/4)	(1/4)	(1/4)	(1/4)
Gas Line	mm	Ø9.52	Ø9.52	Ø9.52	Ø12.70	Ø12.70
	(in.)	(3/8)	(3/8)	(3/8)	(1/2)	(1/2)
Piping length max/height	m	10/5	10/5	15/10	15/10	15/10
Chargeless pipe length	m	10	10	15	8	8
Additional charge	g/m	-	-	-	15 gm/m	25 gm/m
Individual pipe length		10	10	15	15	15
Refrigerant Type		R410A				
Refrigerant Charge	gram	600	650	1050	1450	1340

2.2.7. BIGFLOW COOLING (RAS-07G4/09G4/14G4/18G4/24G4)

Model RAS	Units	RAS-07G4	RAS-09G4	RAS-14G4	RAS-18G4	RAS-24G4
Power Supply		AC 1ϕ, 220-230-240V, 50Hz				
Nominal Cooling Capacity	kW	2.1	2.9	3.5	5.1	6.5
Cooling Power Input	W	610	900	1 090	1 580	2 490
Nominal Heating Capacity	kW	-	-	-	-	-
Heating Power Input	W	-	-	-	-	-
Dehumidifying capacity	L/h	1.2	1.4	1.8	2.8	3.5
Indoor Fan Air Flow Rate (Hi/Me/Lo)	m^3/min	8.0 / 6.5 / 5.0	9.0 / 7.5 / 6.0	10.0 / 8.5 / 7.0	13.5 / 12.5 / 11.3	13.5 / 12.5 / 11.3
Fan Motor	W	20	20	20	30	30
Drain pump pressure lift	cm	N/A	N/A	N/A	N/A	N/A
Sound Pressure Level (Overall A Scale) (Hi/Me/Lo/Sleep)	dB	(C) 36-30-25-23	(C) 38-35-28-24	(C) 41-36-31-27	(C) 45-42-39-36	(C) 45-42-40-38
Refrigerant Type		R410A				
Pipe sizes	mm	6.35 / 9.52	6.35 / 9.52	6.35 / 9.52	6.35 / 12.7	6.35 / 12.7
Pipe sizes	(in)	1/4, 3/8	1/4, 3/8	1/4, 3/8	1/4 , 1/2	1/4 , 1/2
Electrical Data						
Power Cable	No.	2 pcs + Earth	2 pcs + Earth	2 pcs + Earth	2 pcs + Earth	2 pcs + Earth
Cable Size	mm^2	2.0	2.0	2.0	2.0	2.0
Interconnection wires	No.	2 pcs + Earth	2 pcs + Earth	2 pcs + Earth	2 pcs + Earth	2 pcs + Earth
wire size	mm^2	2.0	2.0	2.0	2.0	2.0
Dimensions						
Width	mm	780	780	780	1030	1030
Height	mm	280	280	280	295	295
Depth	mm	210	210	210	183	183
Net Weight	kg	9	9	9	12	12
Colour (Munsell Code)		Pearl White(N9.25)				
Condensate Drain	mm	Ø16 OD	Ø16 OD	Ø16 OD	Ø16 OD	Ø16 OD
Features						
Auto restart	yes/no	yes	Yes	Yes	Yes	Yes
Auto changeover	yes/no	no	No	No	No	No
Air purifying filter type		SPX-CFH11	SPX-CFH11	SPX-CFH11	SPX-CFH5	SPX-CFH5

NOTE:

1. *The nominal cooling and heating capacity is the combined capacity of the HITACHI standard split system, and are based on the JIS 158616.*

Operation Conditions		***Cooling***	***Heating***
Indoor Air Inlet Temperature	*dB*	*27.0 °C*	*20.0 °C*
	WB	*19.0 °C*	
Outdoor Air Inlet Temperature	*dB*	*35.0 °C*	*7.0 °C*
	WB		*6.0 °C*
***Piping Length**: 7.5 meters; **Piping Lift**: 0 meter* ***dB**: Dry Bulb; **WB**: Wet Bulb*			

2. *The Sound Pressure Level is based on the following conditions:*
   - *0.8 meter beneath indoor height center*
   - *1 meter from Discharge grille*

- The above data was measured in an anechoic chamber so that reflected sound should be taken into consideration when installing the unit.

2.2.8. BIGFLOW COOLING (RAC-07G4/09G4/14G4/18G4/24G4)

Model RAC		RAC-07G4	RAC-09G4	RAC-14G4	RAC-18G4	RAC-24G4
Power Supply		From indoor				
Nominal Cooling Capacity	kW	2.1	2.9	3.5	5.1	6.6
Cooling Power Input	W	610	900	1090	1580	2490
Nominal Heating Capacity	kW	-	-	-	-	-
Heating Power Input	W	-	-	-	-	-
Sound Pressure Level		45	48	49	50	54
(Overall A Scale)	dB	-	-	-	-	-
Starting current	A	22	22	30	45	67
Recommended fuse size	A	10	10	15	20	30
Power Cable	No.	-	-	-	-	-
Cable Size	mm^2	-	-	-	-	-
Interconnection wires	No.	2 pcs + Earth	2 pcs + Earth	2 pcs + Earth	2 pcs + Earth	2 pcs + Earth
Wire size	mm^2	2.0	2.0	2.0	2.0	2.0
Dimensions						
Width	mm	700	700	750	850	850
Height	mm	570	570	570	650	650
Depth	mm	210	210	280	298	298
Net Weight	kg	25	27	35	49	55
Cabinet		Synthetic Resin Paint Baked on Galvanised Steel Plate				
Colour (Munsell Code)		Beige (2.5Y 8/2)				
System						
Refrigerant Flow Control		Capillary				
Compressor		Rotary				
Compressor oil type		RB68A	RB68A	RB68A	RB68A	RB68A
Compressor coil resistance	MΩ	R1=5.23 R2=5.62 At 20°C	R1=3.19 R2=4.62 At 20°C	R1=2.83 R2=5.41 At 20°C	R1=1.78 R2=2.18 At 20°C	R1=0.83 R2=2.28 At 20°C
		R1=6.36 R2=6.84 At 75°C	R1=3.88 R2=5.62 At 75°C	R1=3.44 R2=6.58 At 75°C	R1=2.16 R2=2.64 At 75°C	R1=1.01 R2=2.75 At 75°C
Condenser Fan		Propeller Fan				
Quantity		1	1	1	1	1
Air flow rate (C/H)	m^3/min	24/24	24/24	27/27	36/36	36/36
Refrigerant Piping		Flare-Nut and/or Flange Connection (Factory supplied)				
Liquid Line	mm	Ø6.35	Ø6.35	Ø6.35	Ø6.35	Ø6.35
	(in.)	(1/4)	(1/4)	(1/4)	(1/4)	(1/4)
Gas Line	mm	Ø9.52	Ø9.52	Ø9.52	Ø12.70	Ø12.70
	(in.)	(3/8)	(3/8)	(3/8)	(1/2)	(1/2)
Piping length max/height	m	10/5	10/5	15/10	15/10	15/10
Chargeless pipe length	m	10	10	15	8	8
Additional charge	g/m	-	-	-	15 g/m	25gm/m
Individual pipe length		10	10	10	15	15
Refrigerant Type		R410A				
Refrigerant Charge	gram	600	650	1050	1450	1340

3 DIMENSIONAL DATA

CONTENTS

3 DIMENSIONAL DATA 3-1

3.1. Monozone/Multizone Indoor Units 3-2

3.1.1. Wall Type: RAK-18NH5/25NH5/35NH5/50NH5 3-2
3.1.2. Wall Type: RAK-65NH5 3-3
3.1.3. Floor Type: RAF-25NH5/35NH5/50NH5 3-4
3.1.4. 4-Way Ceiling Cassette Type: RAI-25NH5/35NH5/50NH5 3-5
3.1.5. Duct Type: RAD-25NH5/35NH5 3-6

3.2. Monozone/Multizone Outdoor Units 3-7

3.2.1. Monozone: RAC-25NH5/35NH5 3-7
3.2.2. Monozone: RAC-50NH5,RAC-65NH5 3-8
3.2.3. 2 Room Multizone: RAM-40QH5 3-9
3.2.4. 2 Room Multizone: RAM-55QH5 3-10
3.2.5. 3 Room Multizone: RAM-65QH5 3-11
3.2.6. 4 Room Multizone: RAM-72QH5 3-12
3.2.7. 4 Room Multizone: RAM-80QH5 3-13

3.3. Split Units 3-14

3.3.1. Summit: RAS-18YH5/25YH5/35YH5/50YH5 3-14
3.3.2. Summit: RAC-18YH5/25YH5/35YH5 3-15
3.3.3. Summit: RAC-50YH5 3-16
3.3.4. Summit: RAS-60YH5/70YH5 3-17
3.3.5. Summit: RAC-60YH5 3-18
3.3.6. Summit: RAC-70YH5 3-19
3.3.7. Summit: RAS-80YH5 3-20
3.3.8. Summit: RAC-80YH5 3-21
3.3.9. Bigflow: RAS-07/09/14G4/GH4 3-22
3.3.10. Bigflow: RAC-07/09G4/GH4 3-23
3.3.11. Bigflow: RAC-14G4/GH4 3-24
3.3.12. Bigflow: RAS-18G4/GH4 3-25
3.3.13. Bigflow: RAC-18G4/GH4 3-26
3.3.14. Bigflow: RAS-24G4/GH4 3-27
3.3.15. Bigflow: RAC-24G4/GH4 3-28

3.1. MONOZONE/MULTIZONE INDOOR UNITS

3.1.1. WALL TYPE: RAK-18NH5/25NH5/35NH5/50NH5

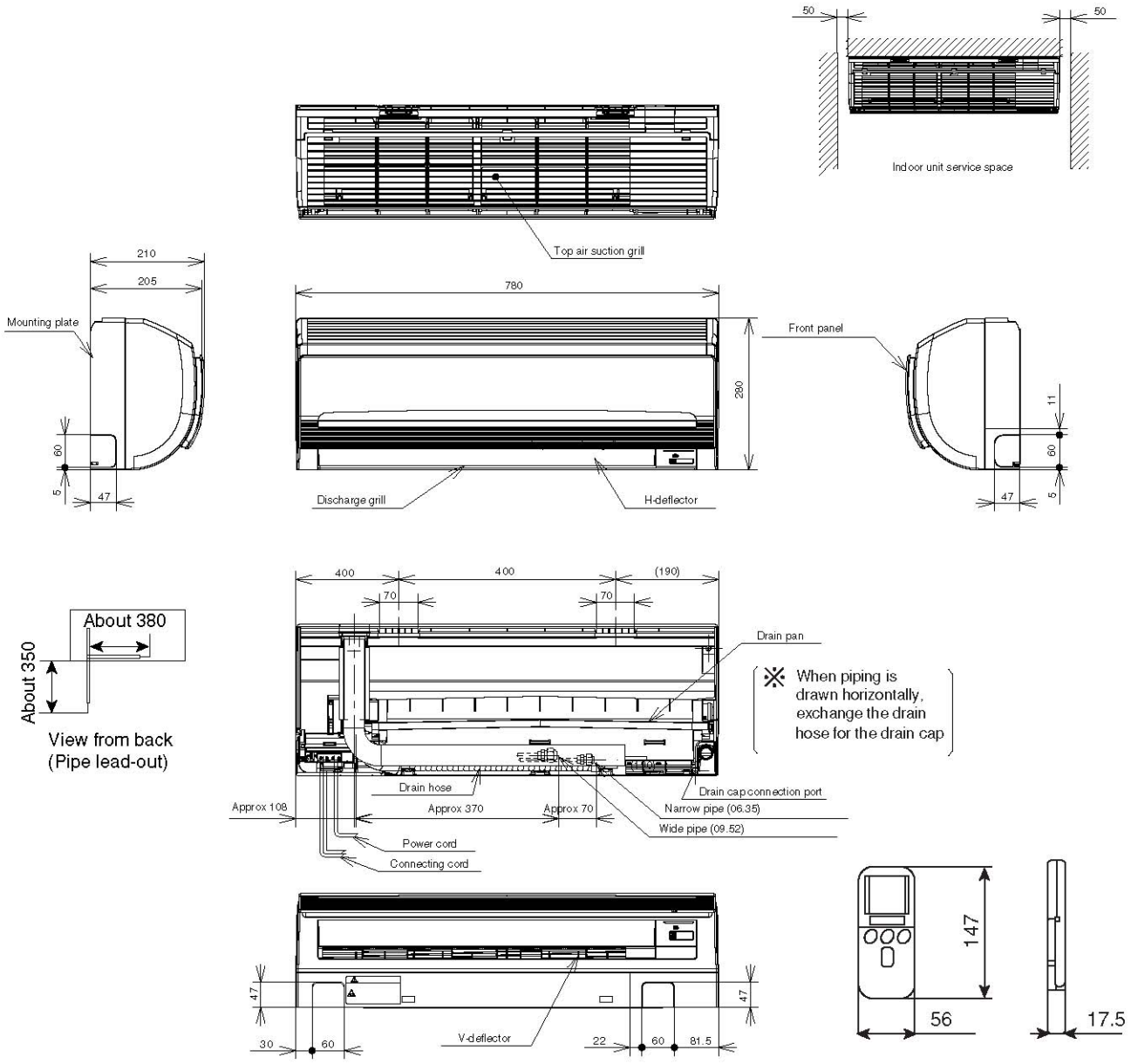

3.1.2. WALL TYPE: RAK-65NH5

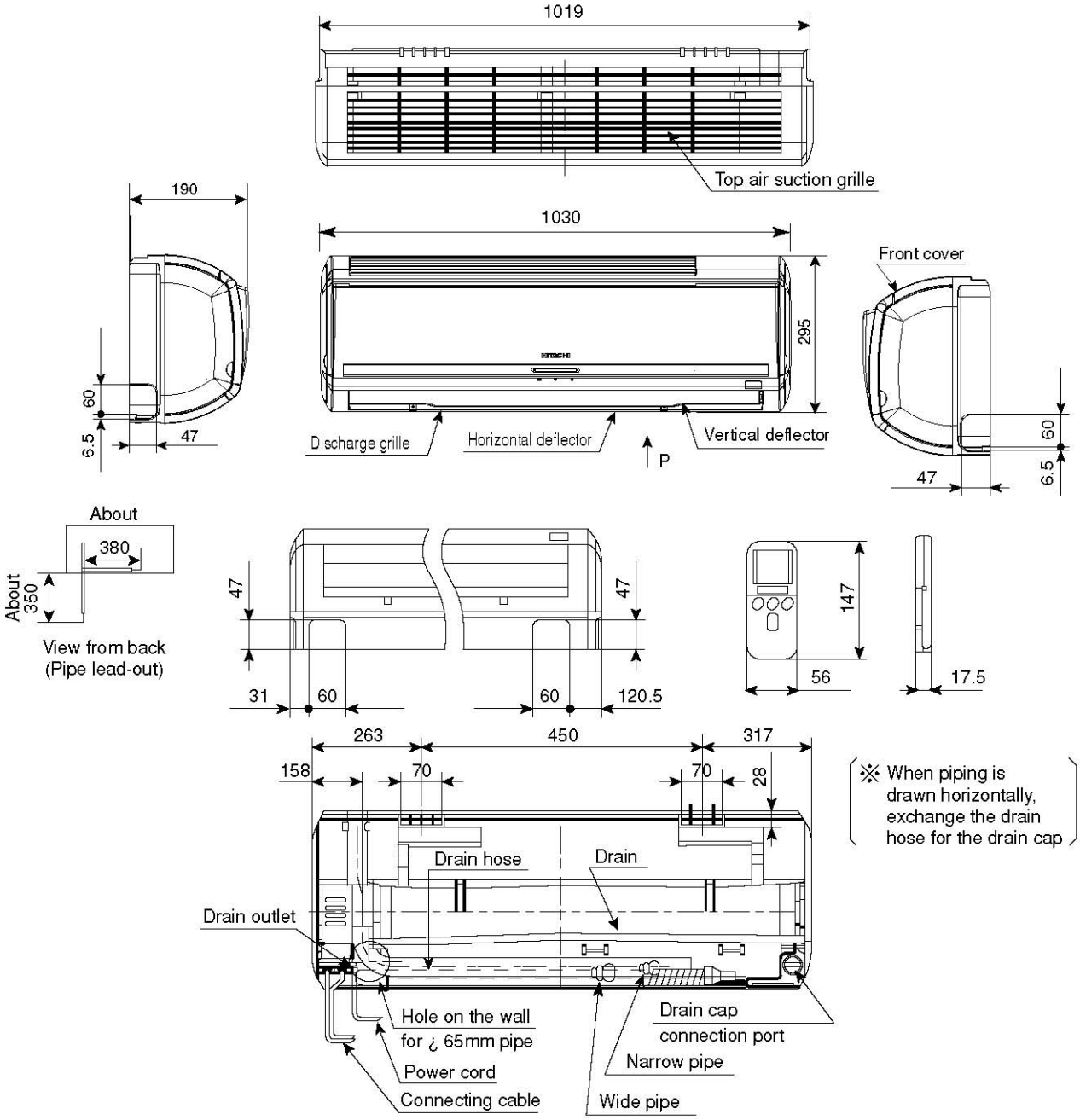

3.1.3. FLOOR TYPE: RAF-25NH5/35NH5/50NH5

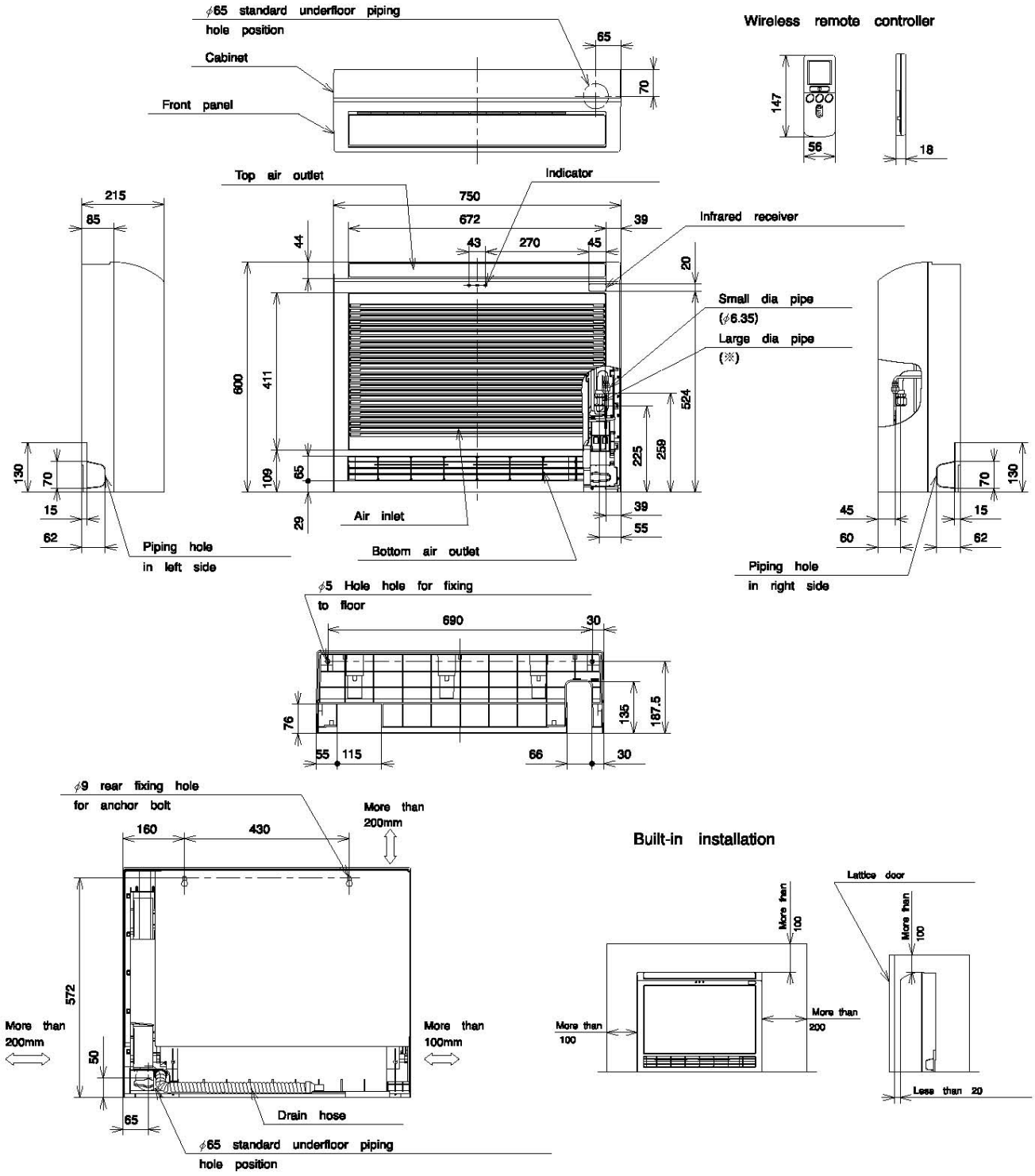

3.1.4. 4-WAY CEILING CASSETTE TYPE: RAI-25NH5/35NH5/50NH5

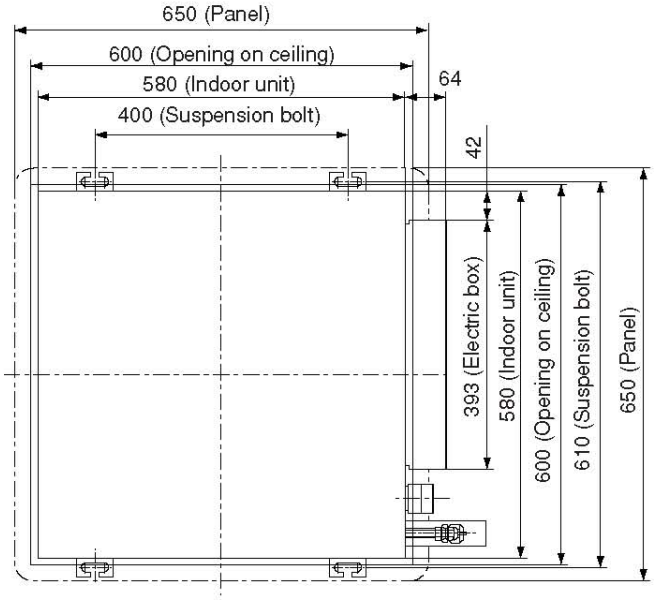

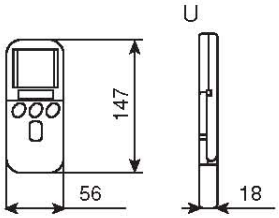

Wireless remote controller

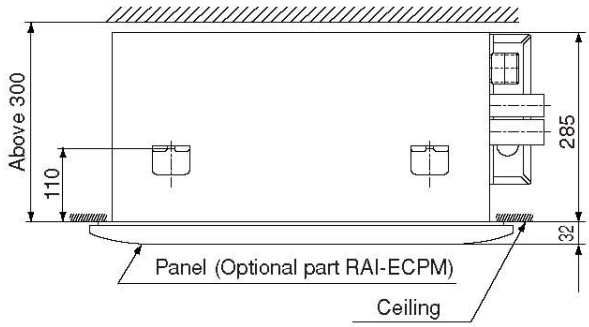

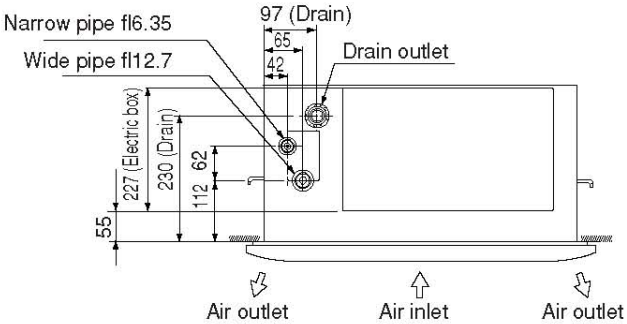

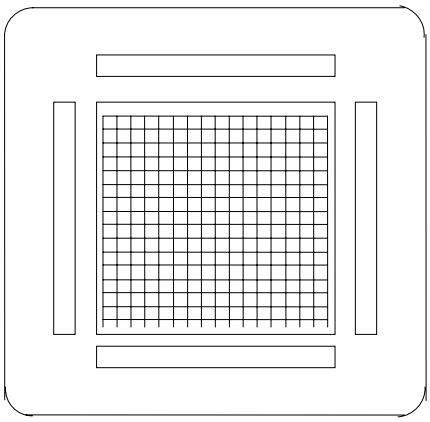

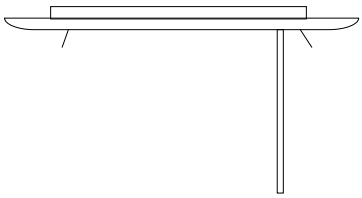

3.1.5. DUCT TYPE: RAD-25NH5/35NH5

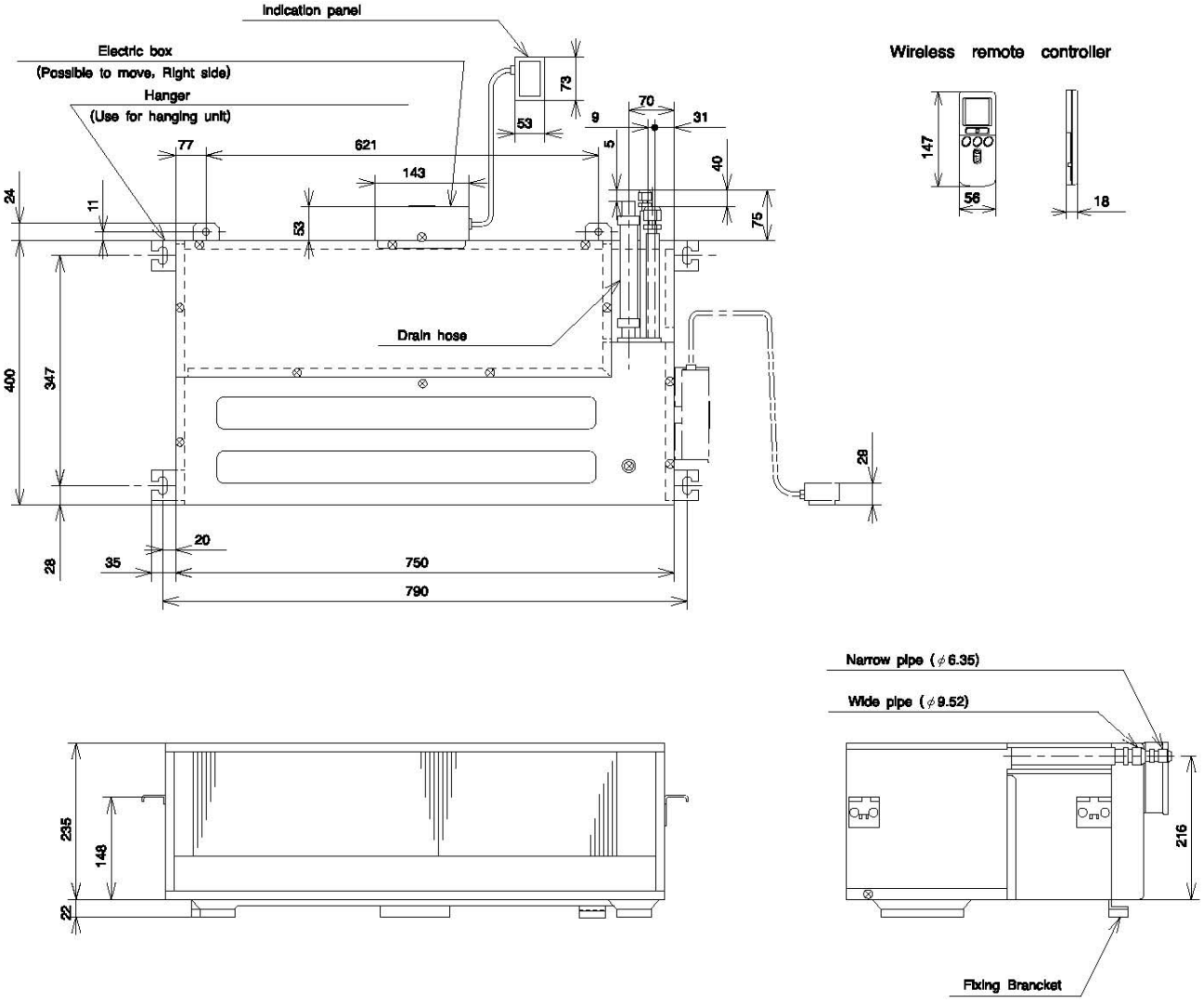

3.2. MONOZONE/MULTIZONE OUTDOOR UNITS

3.2.1. MONOZONE: RAC-25NH5/35NH5

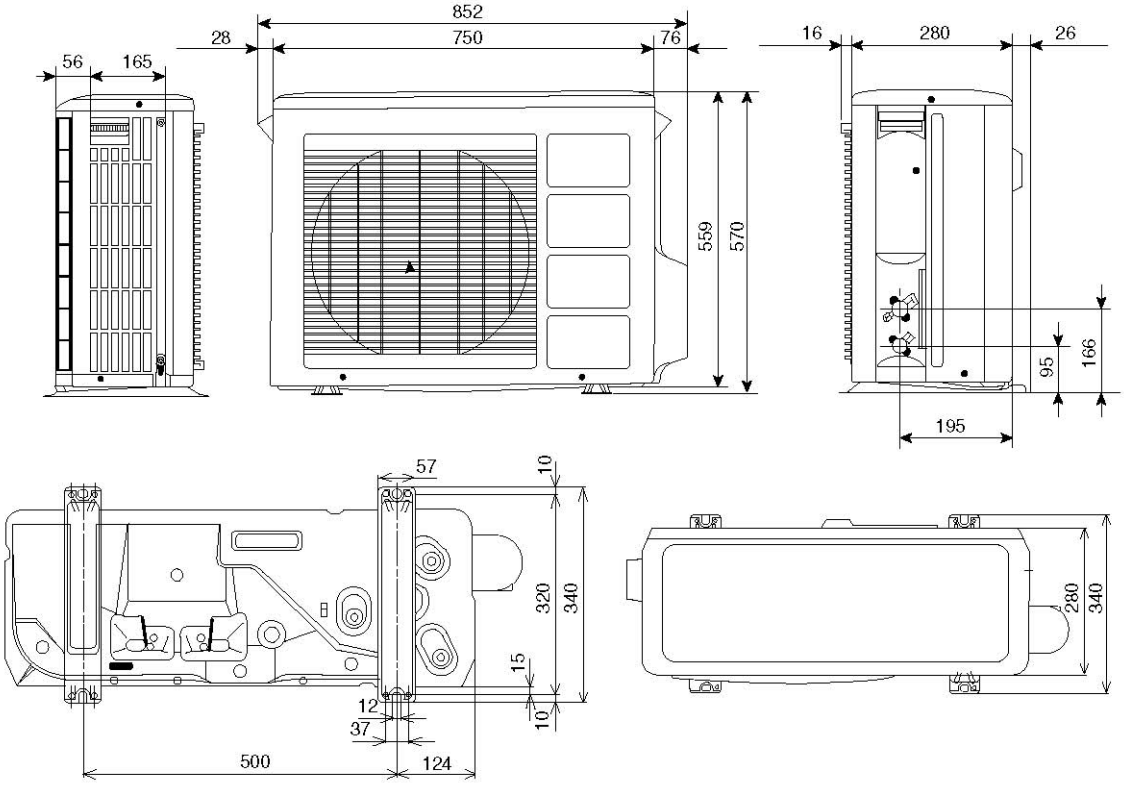

3.2.2. MONOZONE: RAC-50NH5/RAC-65NH5

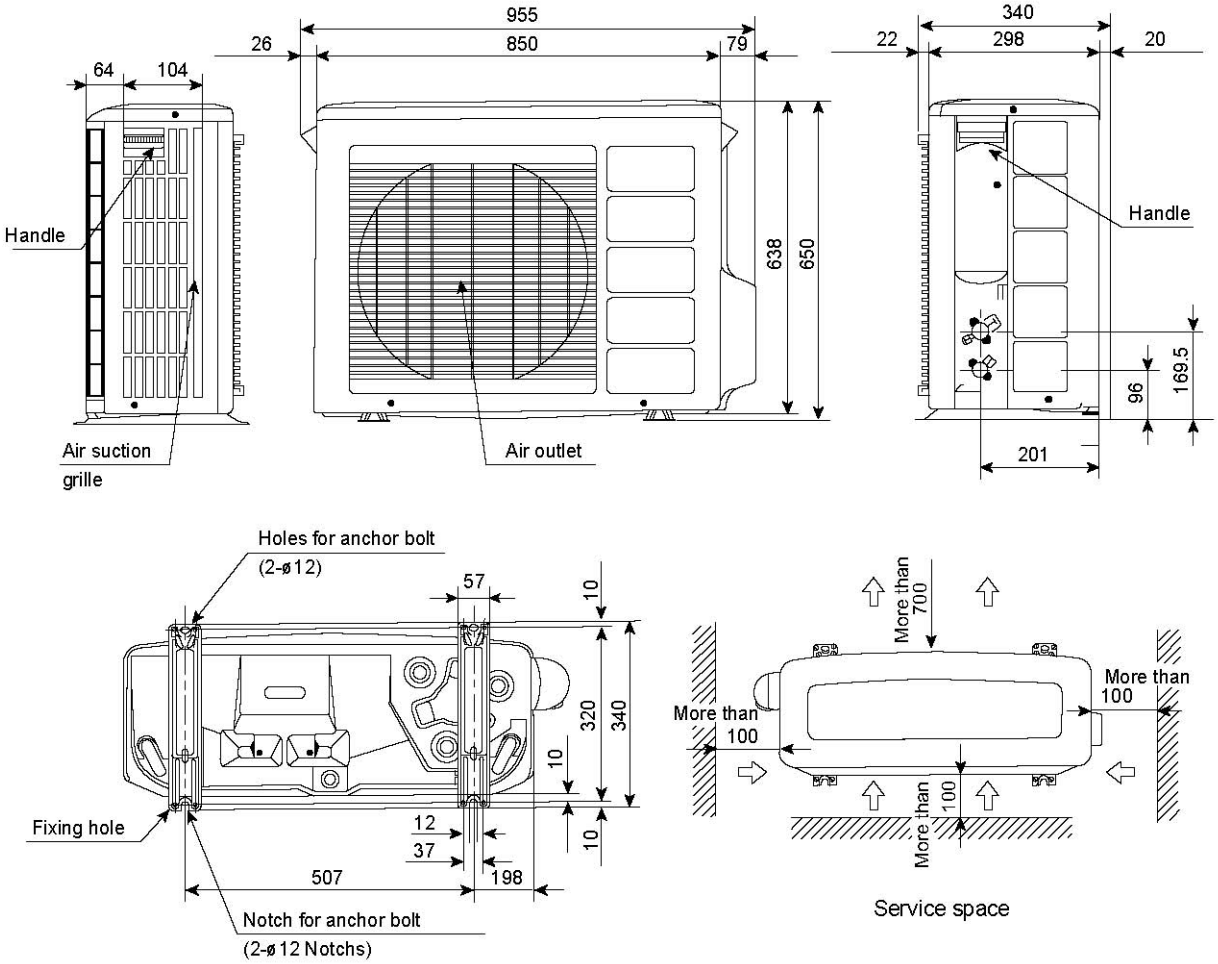

3.2.3. 2 ROOM MULTIZONE: RAM-40QH5

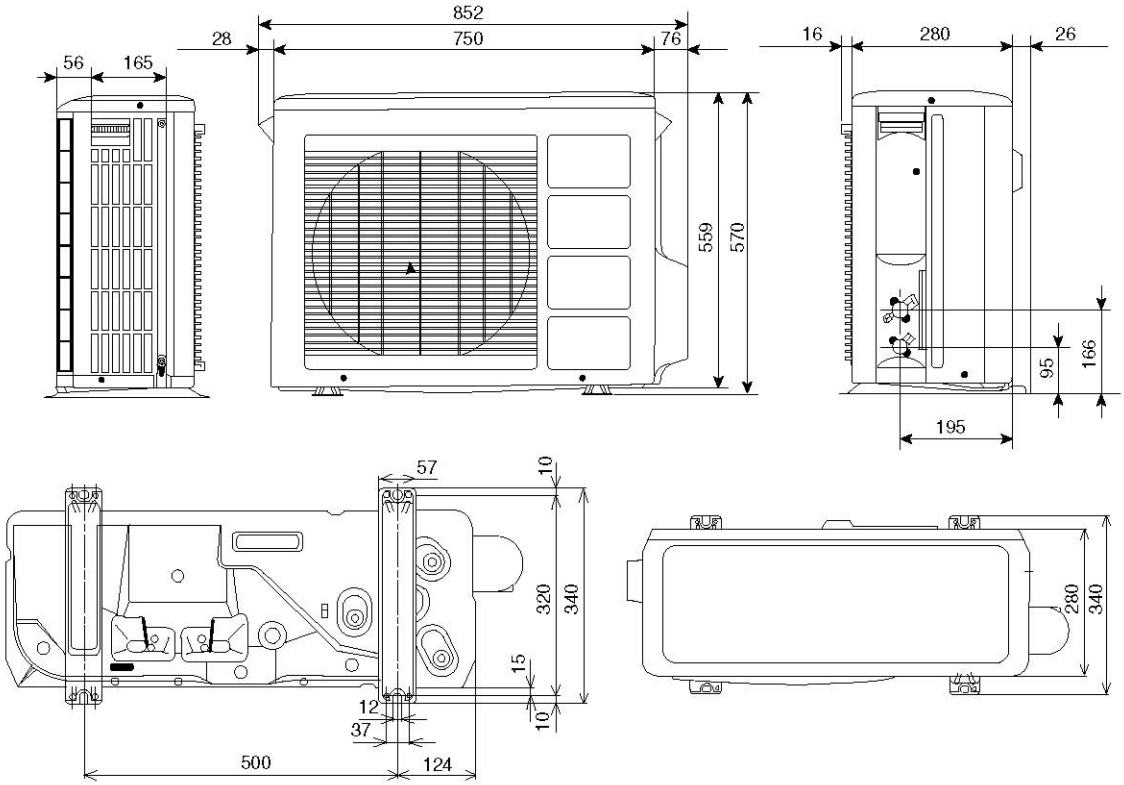

3.2.4. 2 ROOM MULTIZONE: RAM-55QH5

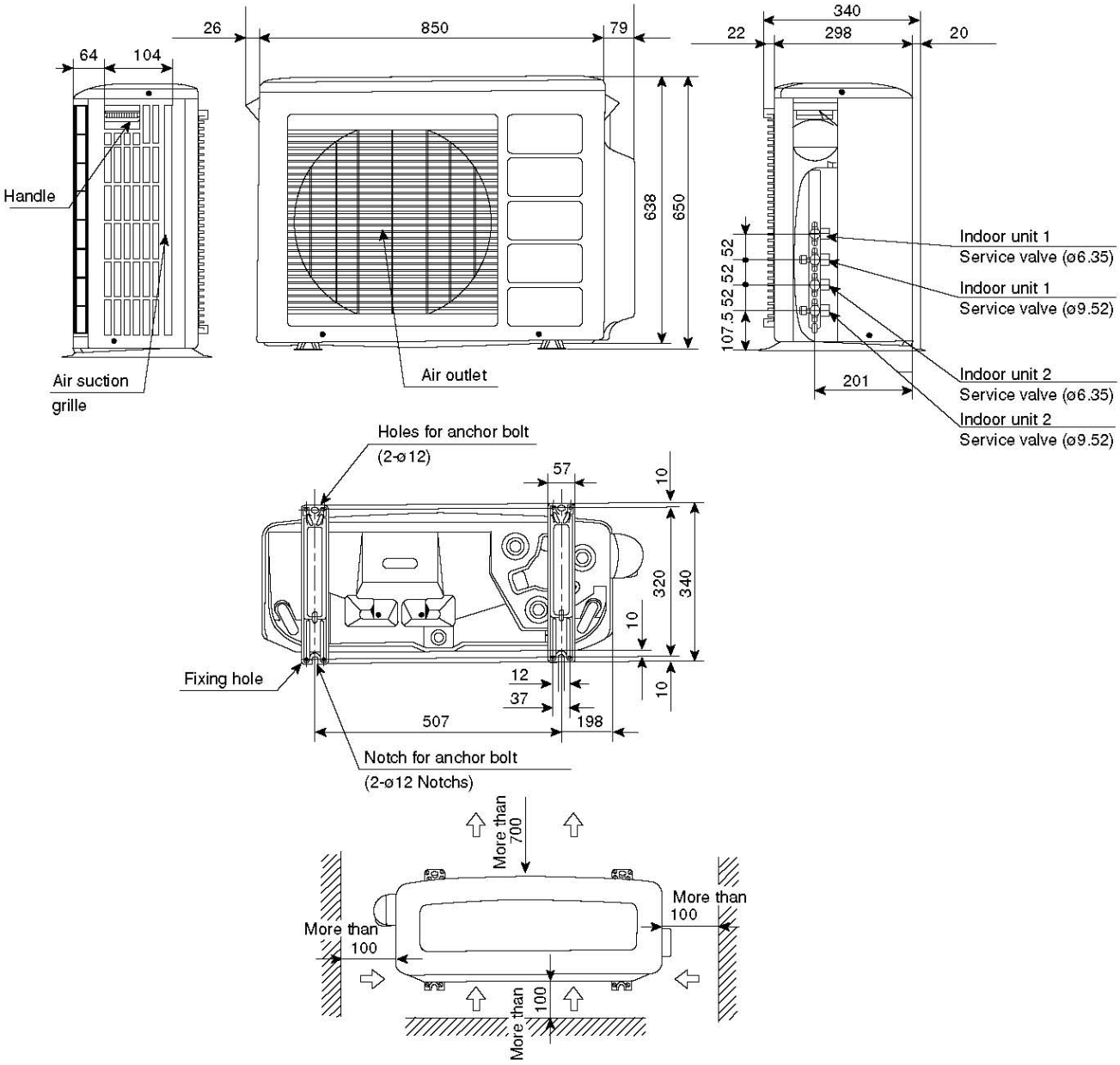

3.2.5. 3 ROOM MULTIZONE: RAM-65QH5

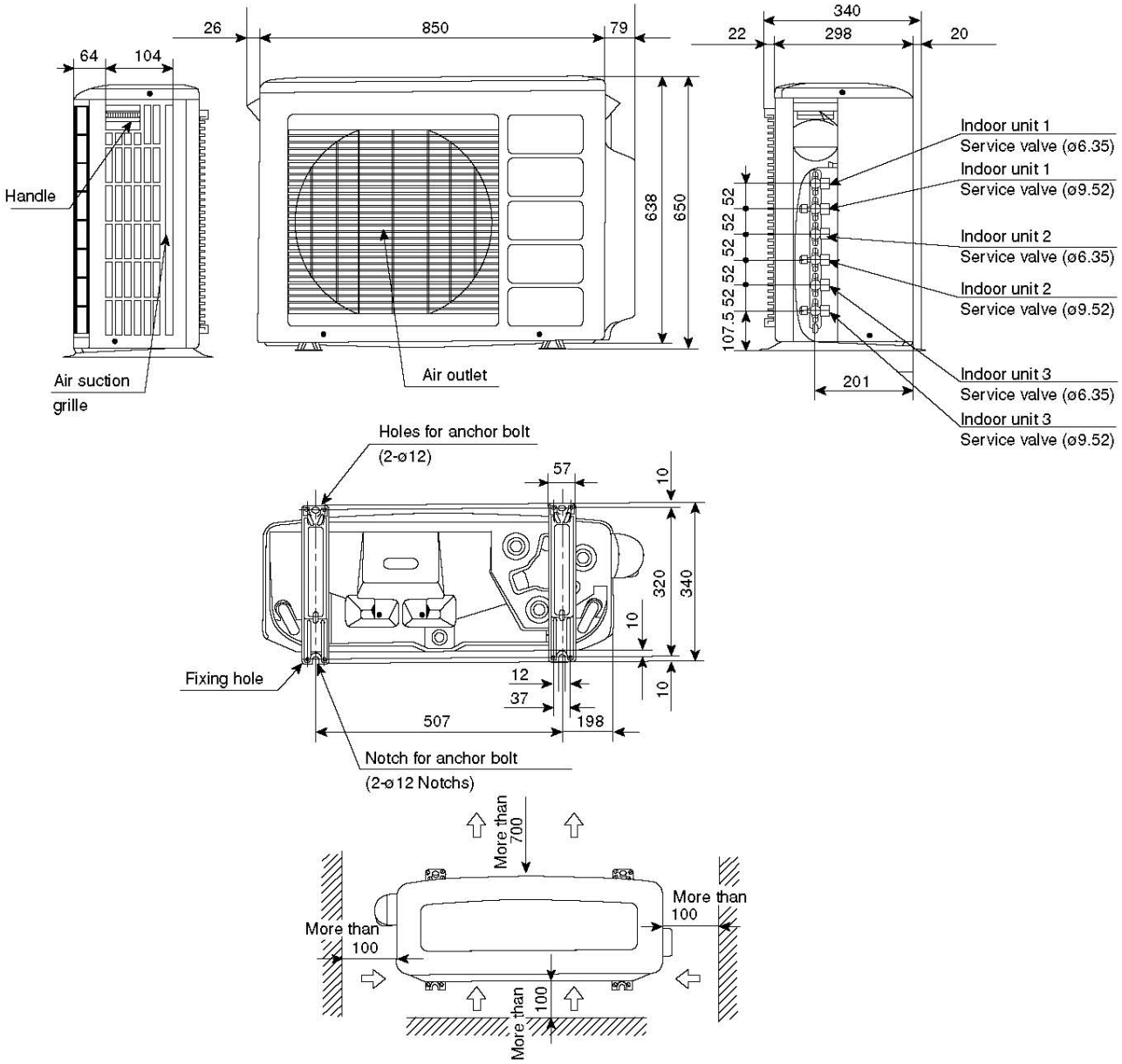

3.2.6. 4 ROOM MULTIZONE: RAM-72QH5

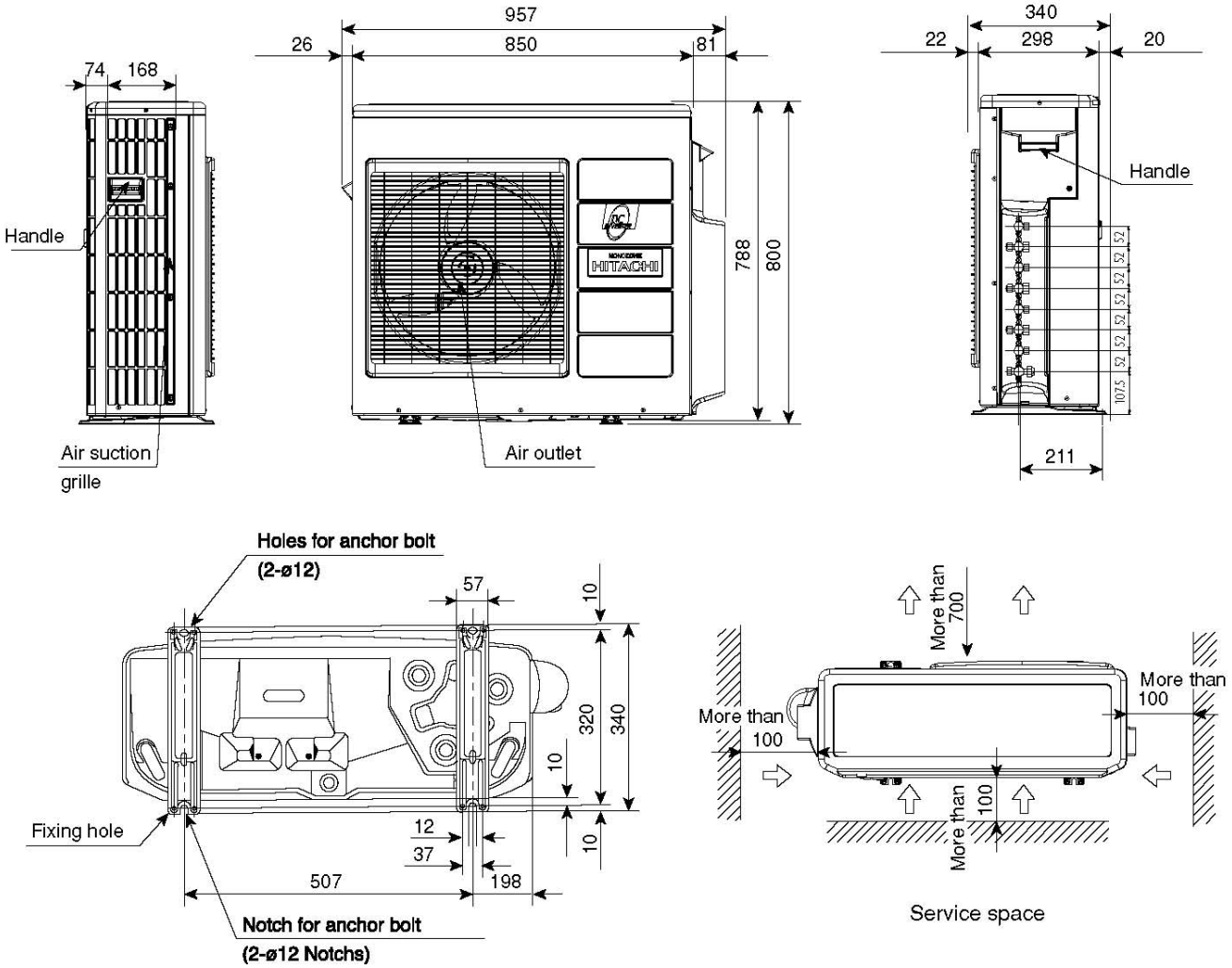

3.2.7. 4 ROOM MULTIZONE: RAM-80QH5

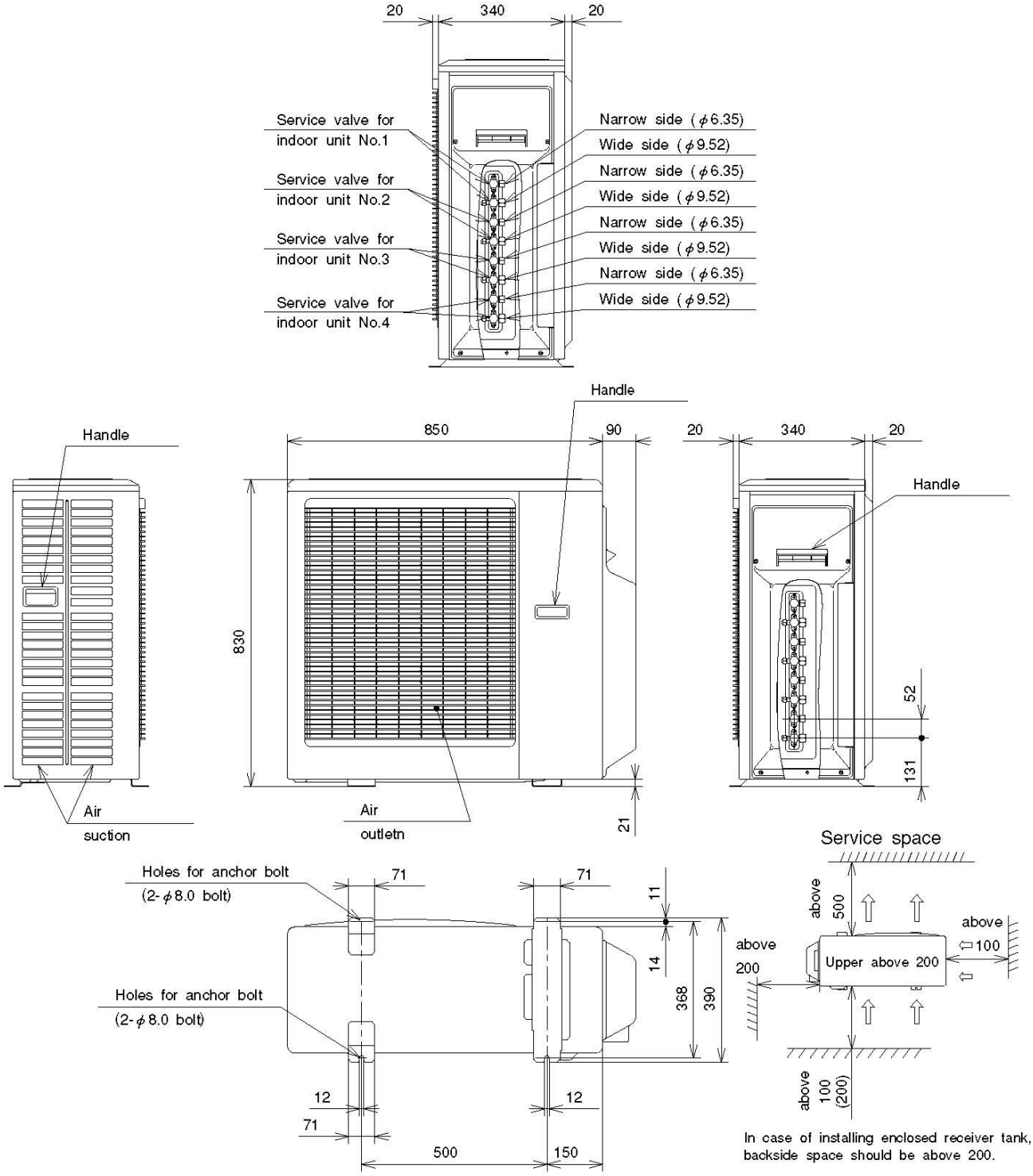

3.3. SPLIT UNITS

3.3.1. SUMMIT: RAS-18YH5/25YH5/35YH5/50YH5

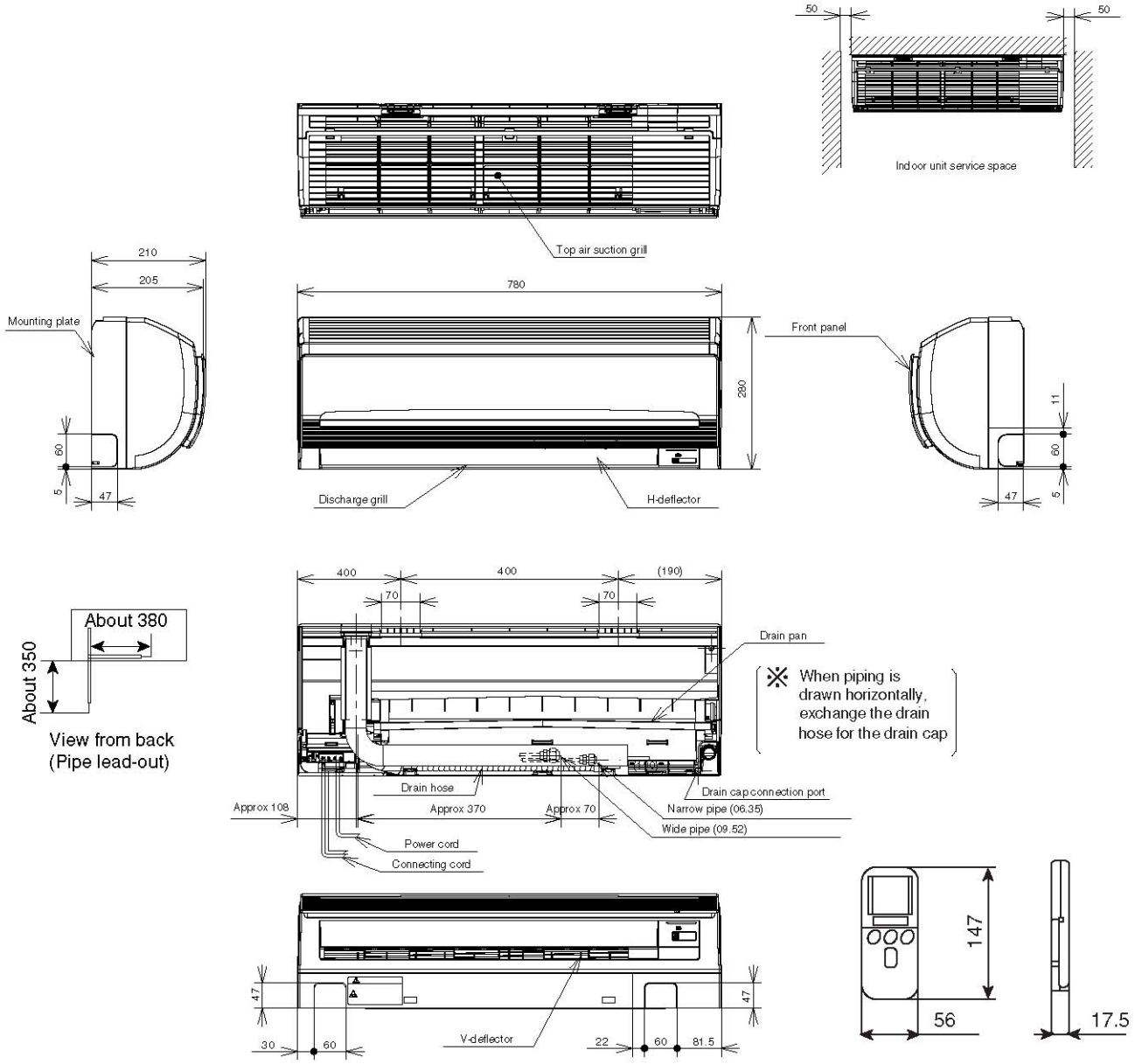

3.3.2. SUMMIT: RAC-18YH5/25YH5/35YH5

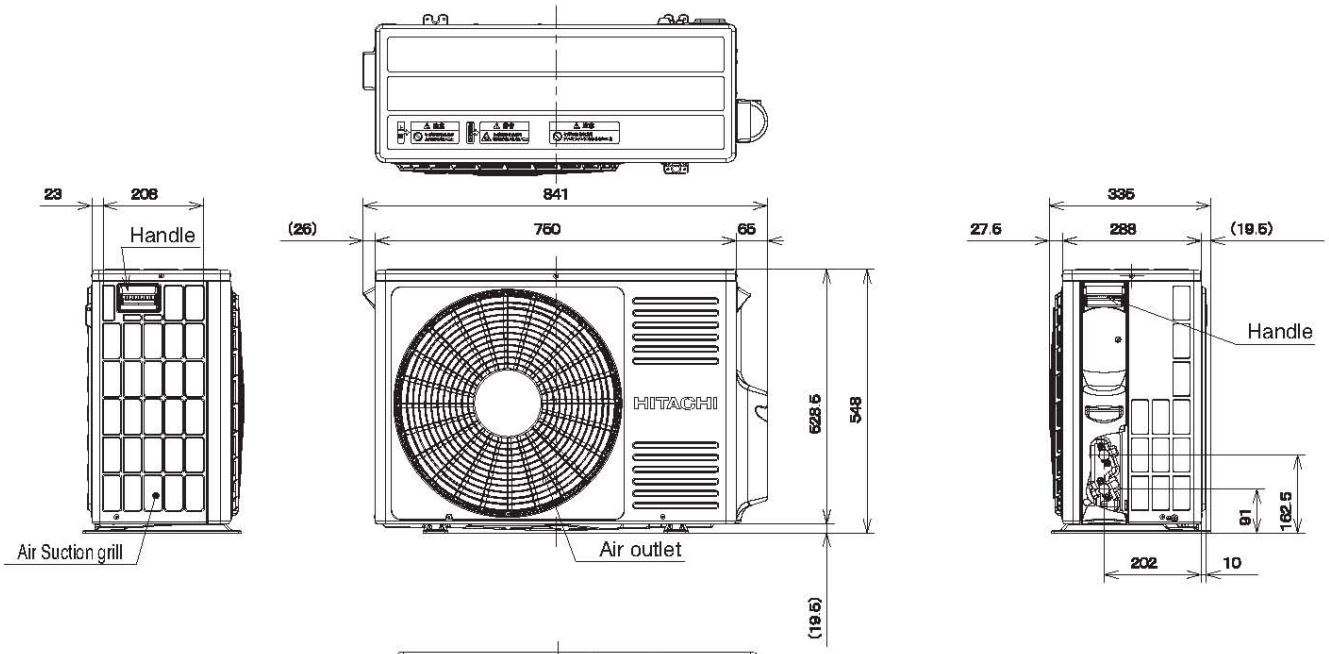

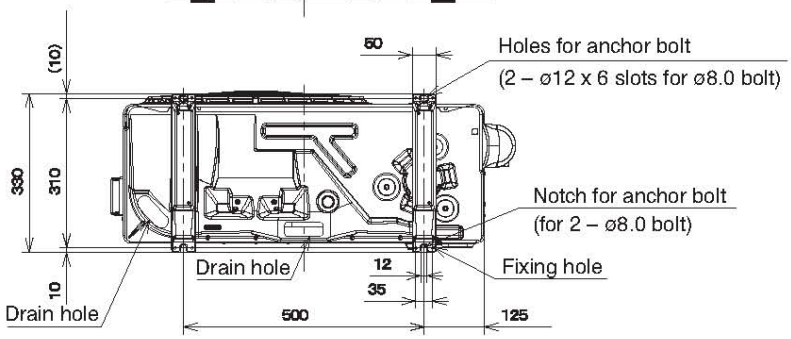

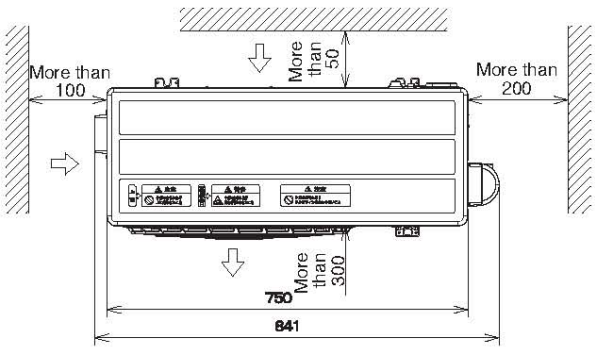

Service space

3.3.3. SUMMIT: RAC-50YH5

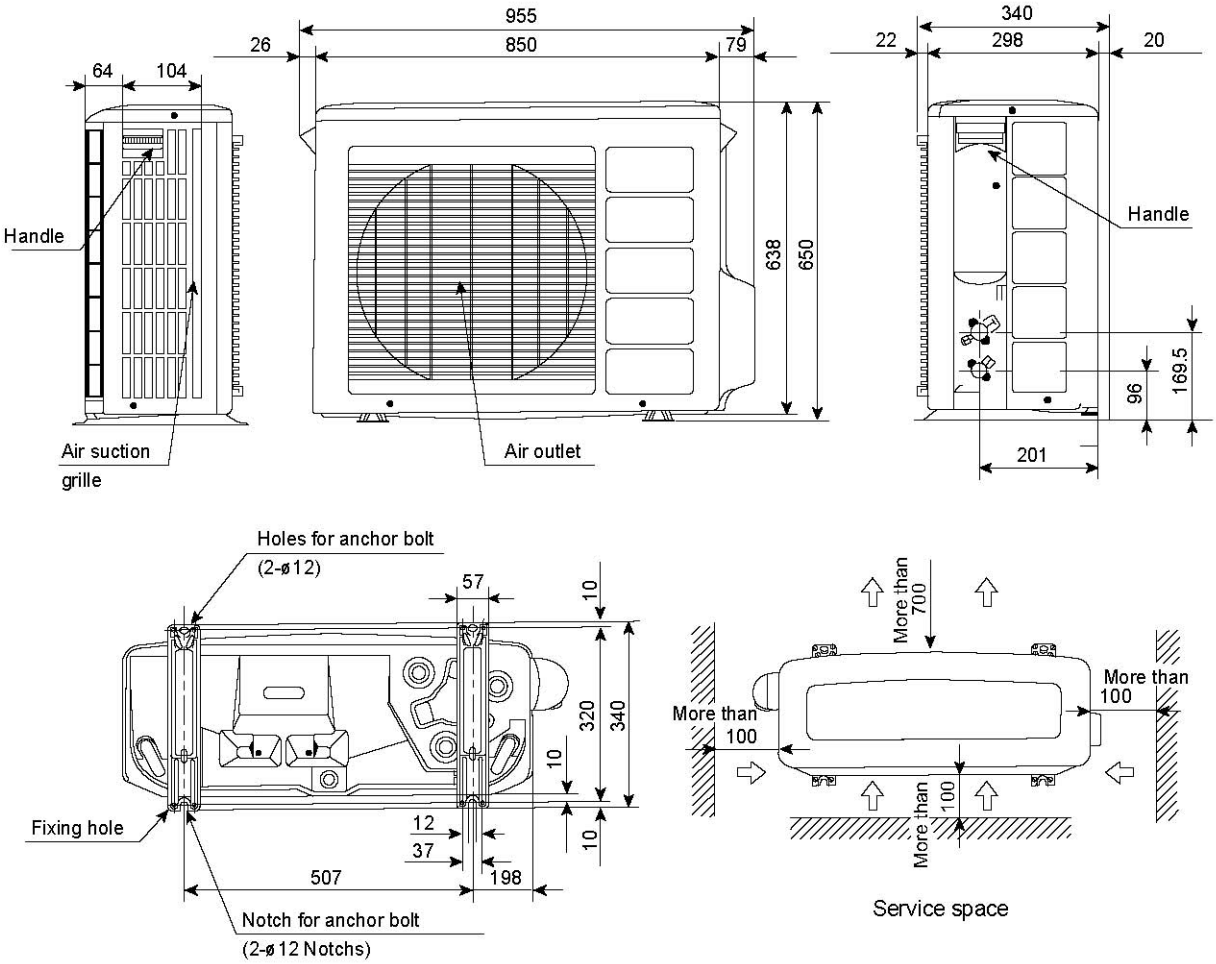

3.3.4. SUMMIT: RAS-60YH5/70YH5

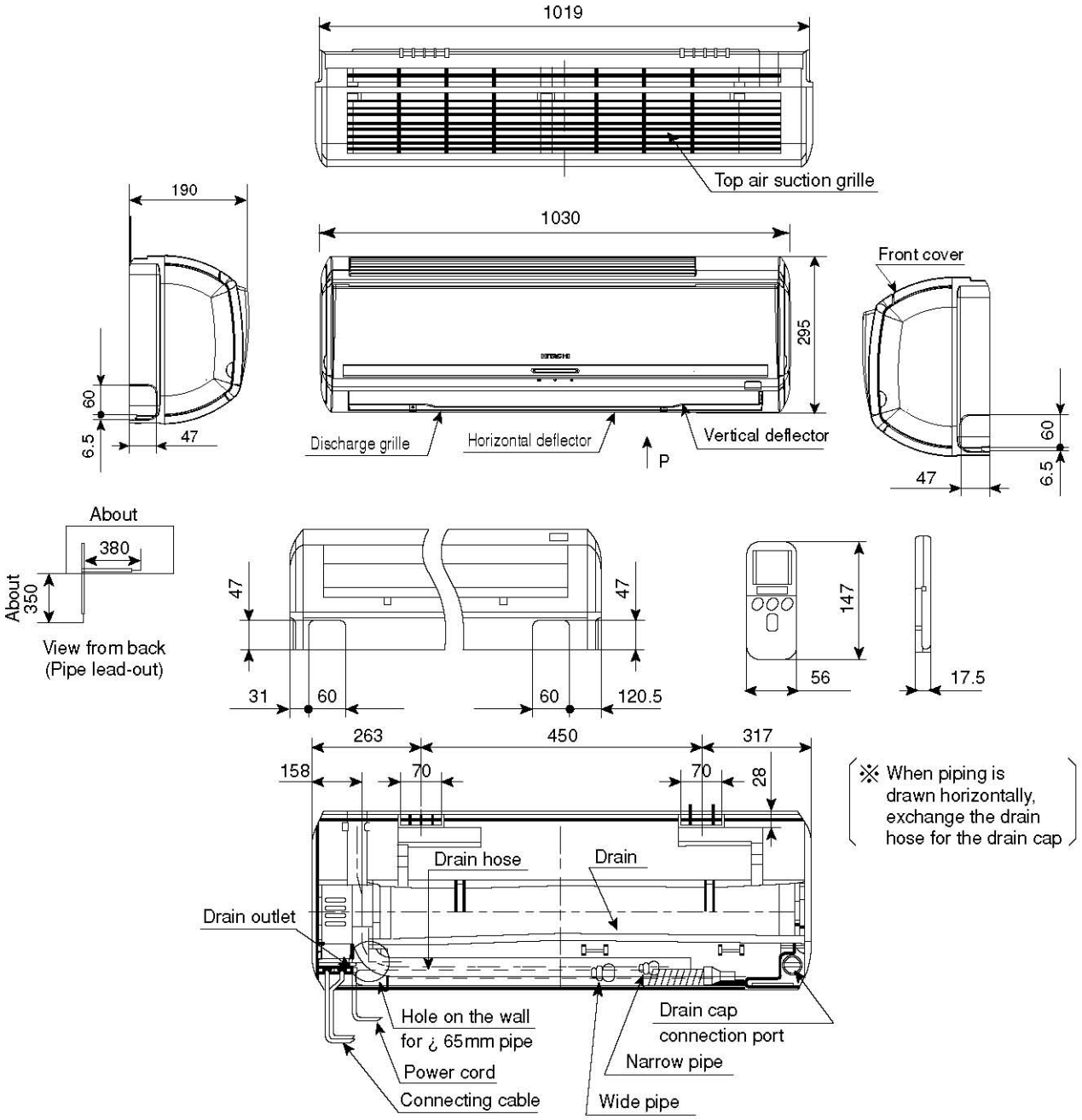

3.3.5. SUMMIT: RAC-60YH5

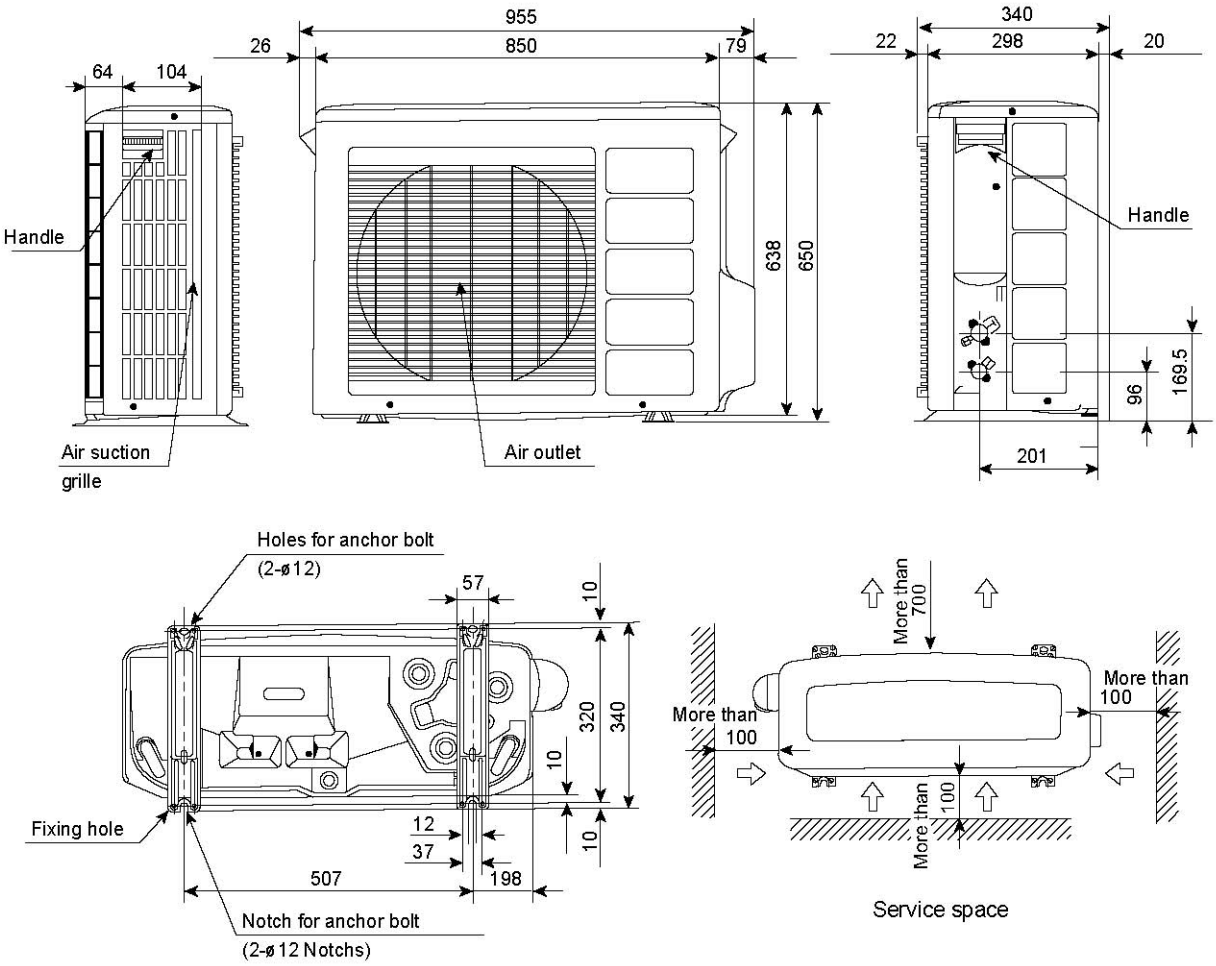

3.3.6. SUMMIT: RAC-70YH5

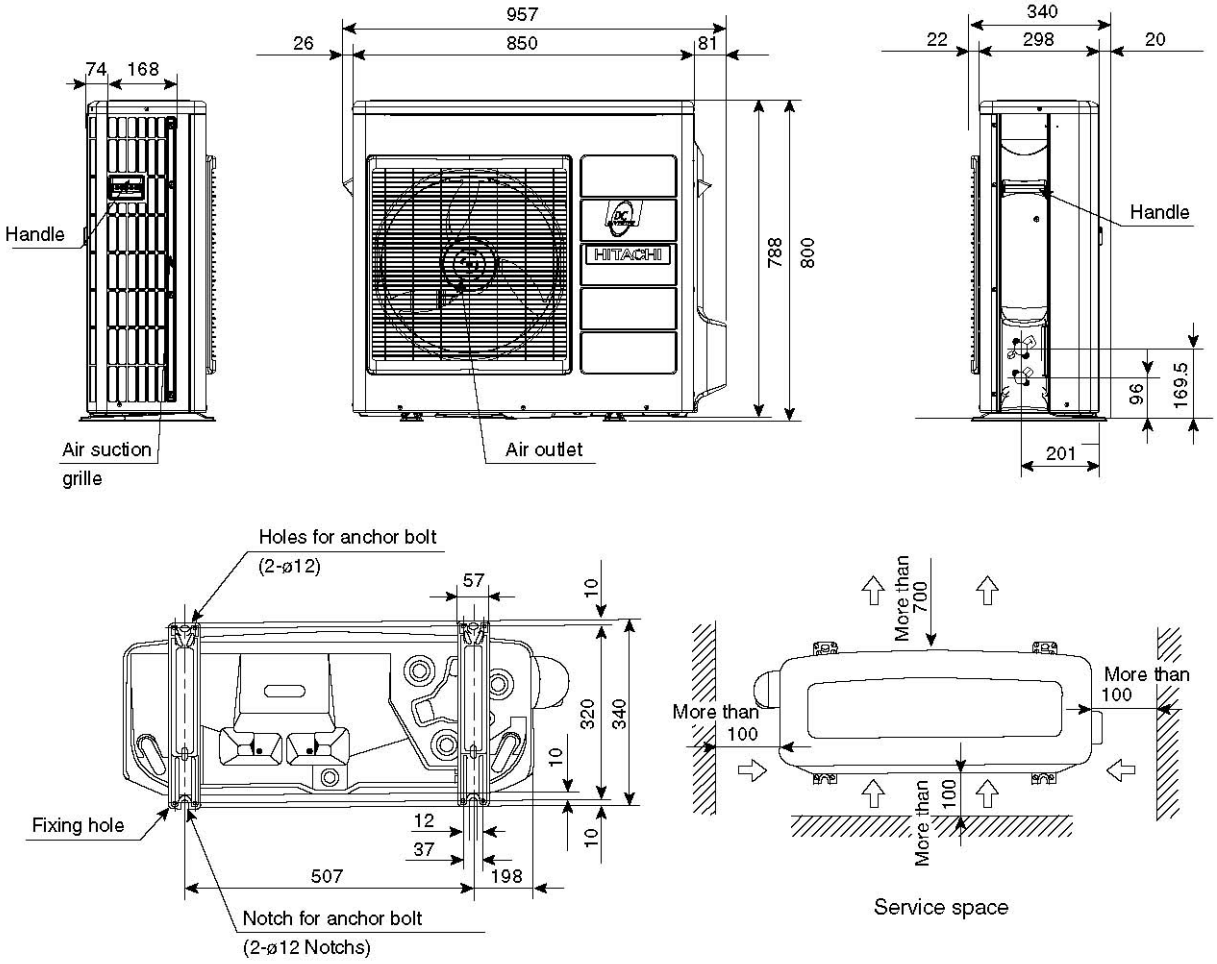

3.3.7. SUMMIT: RAS-80YH5

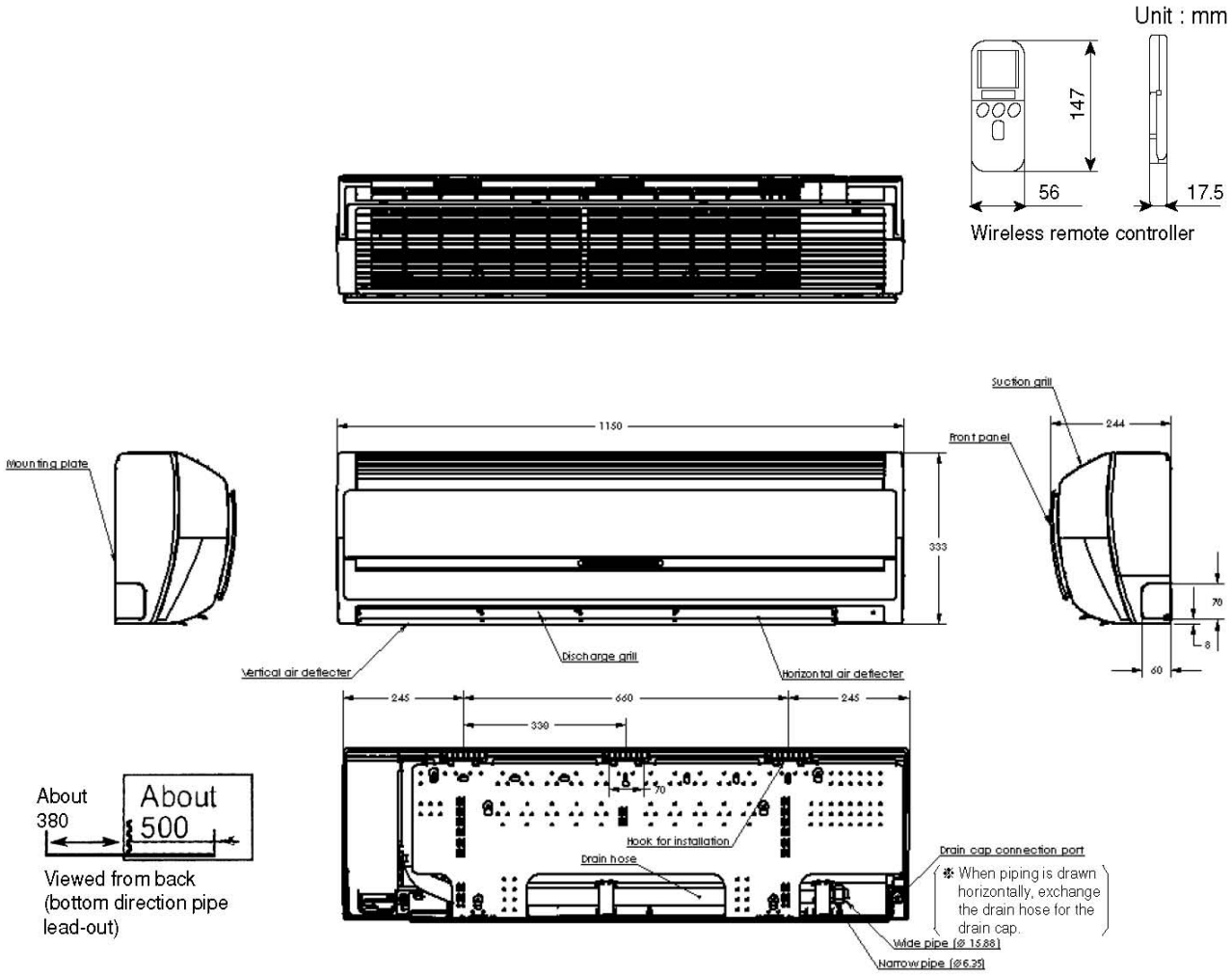

Notes:

1. Service space (free space needed for servicing) is 200mm on the right, 100mm on the left and 50mm on top.
2. The wide and narrow pipes must be thermally insulated.

3.3.8. SUMMIT: RAC-80YH5

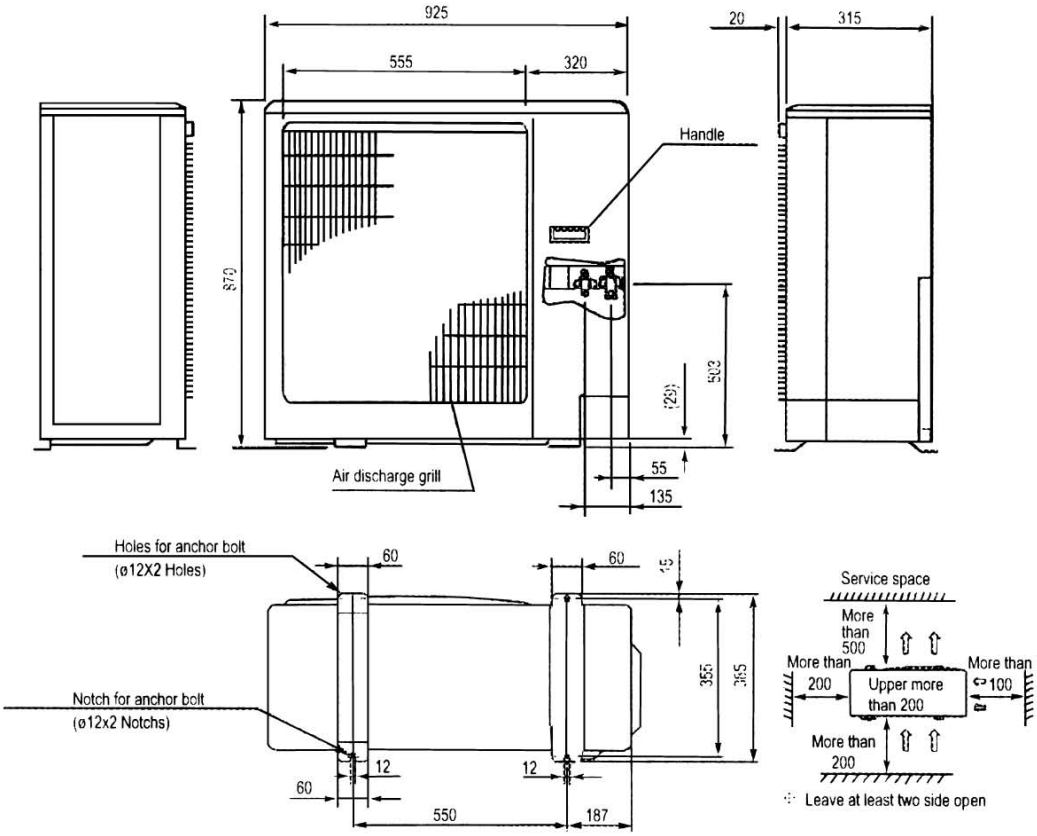

3.3.9. BIGFLOW: RAS-07G4/09G4/14G4/07GH4/09GH4/14GH4

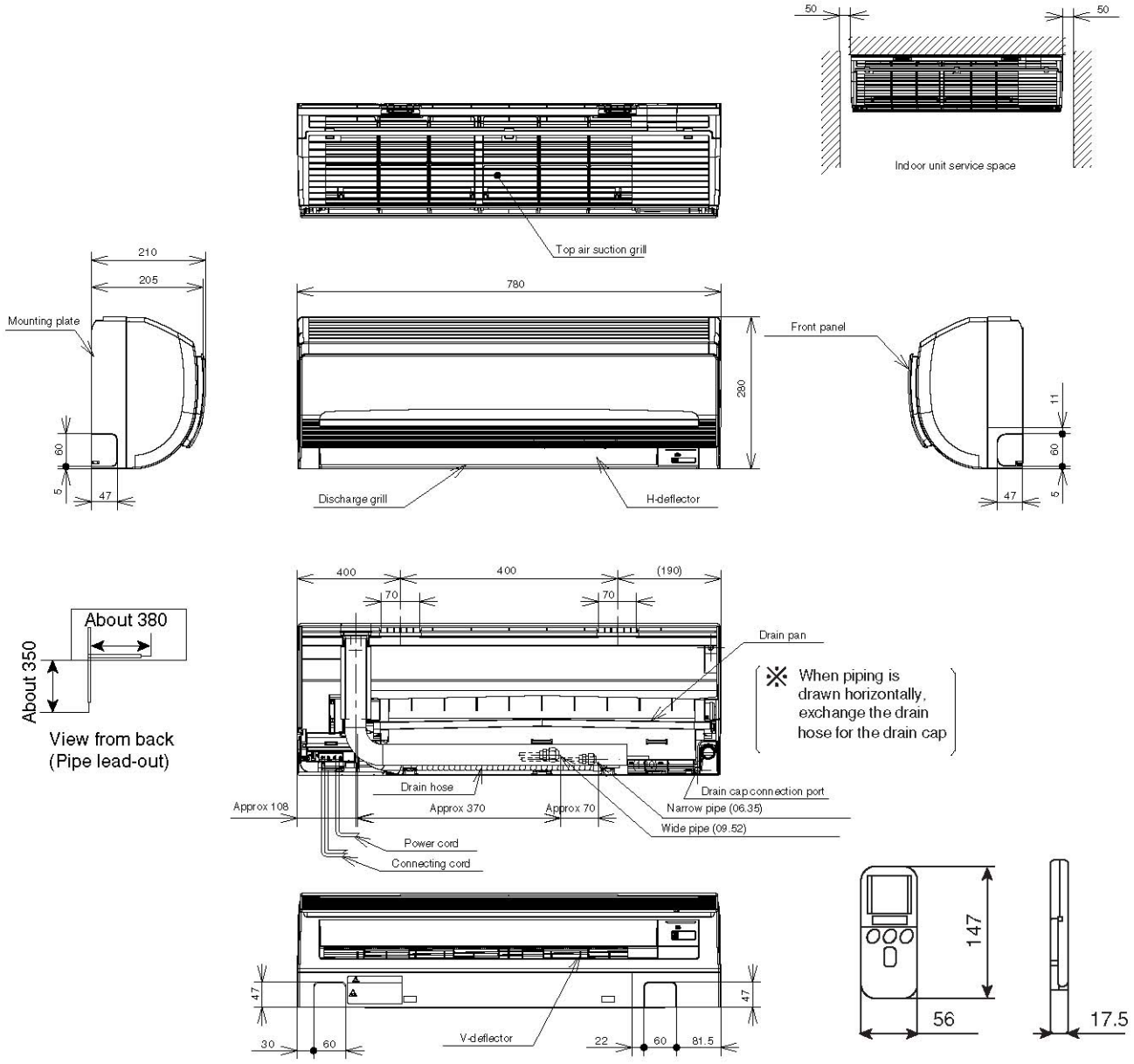

3.3.10. BIGFLOW: RAC-07G4/09G4/07GH4/09GH4

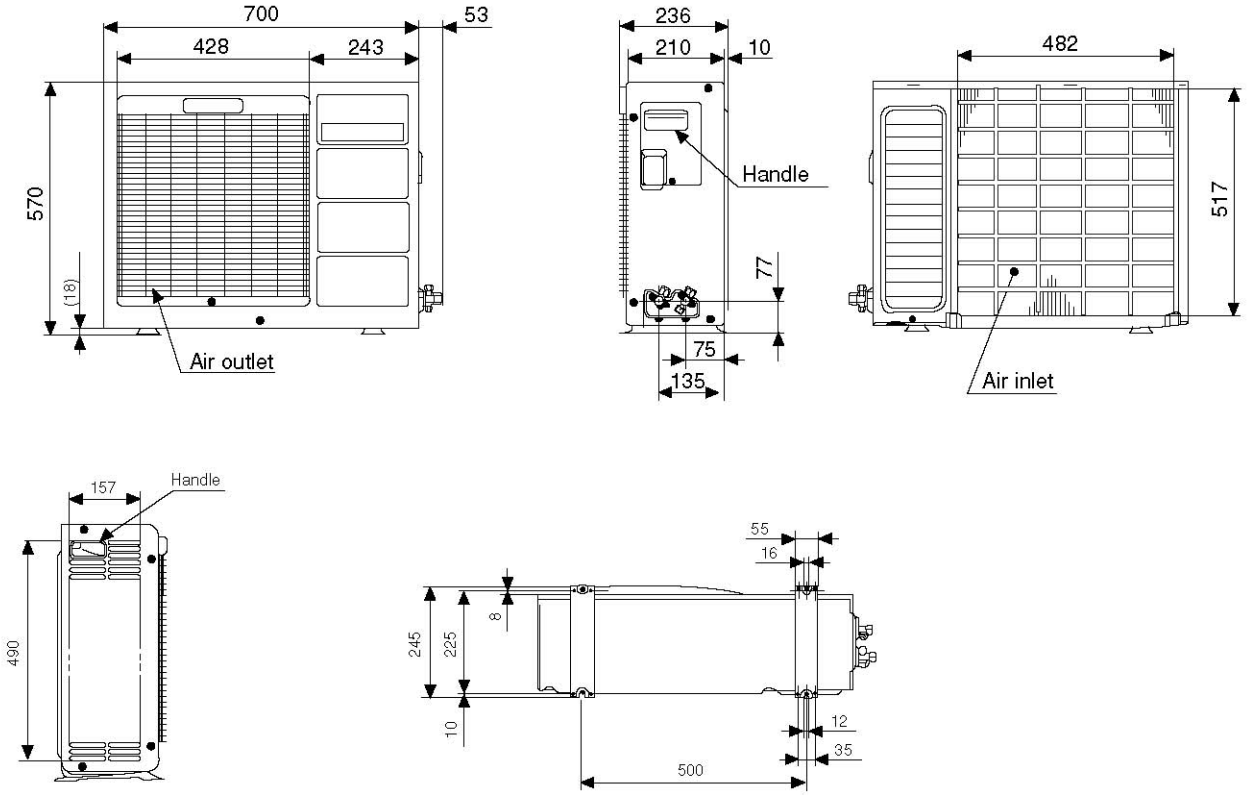

3.3.11. BIGFLOW: RAC-14G4/14GH4

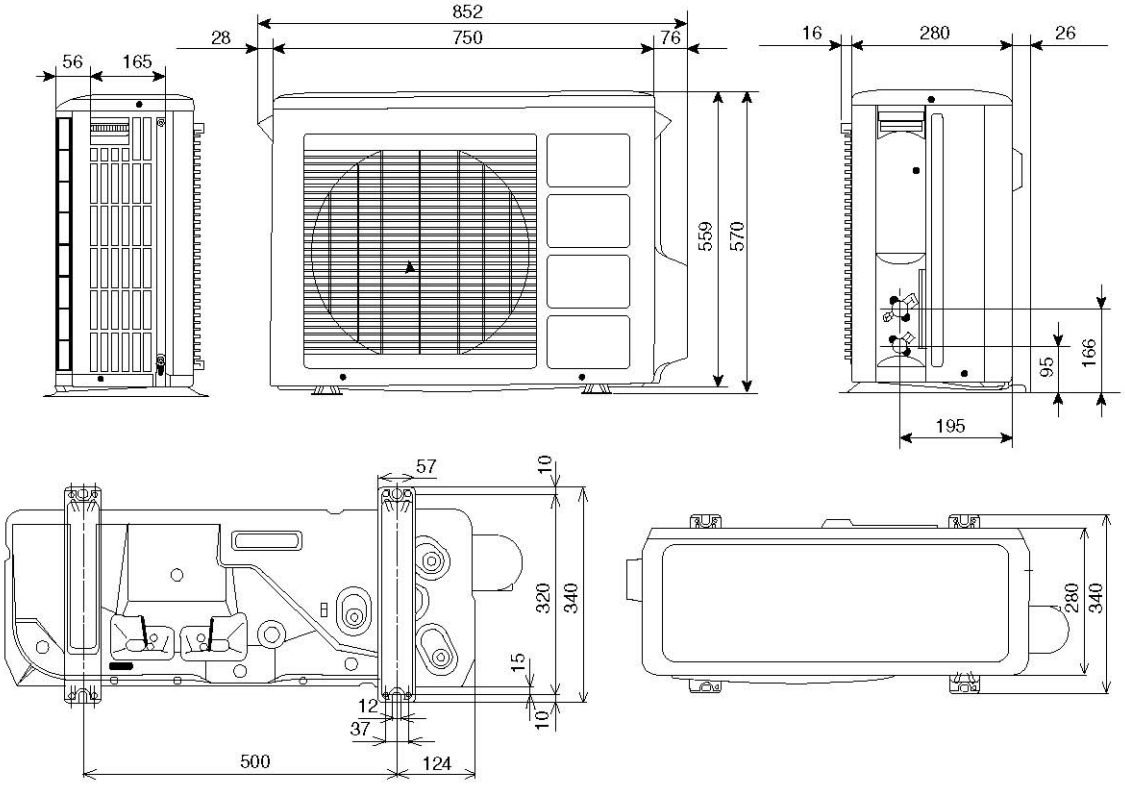

3.3.12. BIGFLOW: RAS-18G4/18GH4

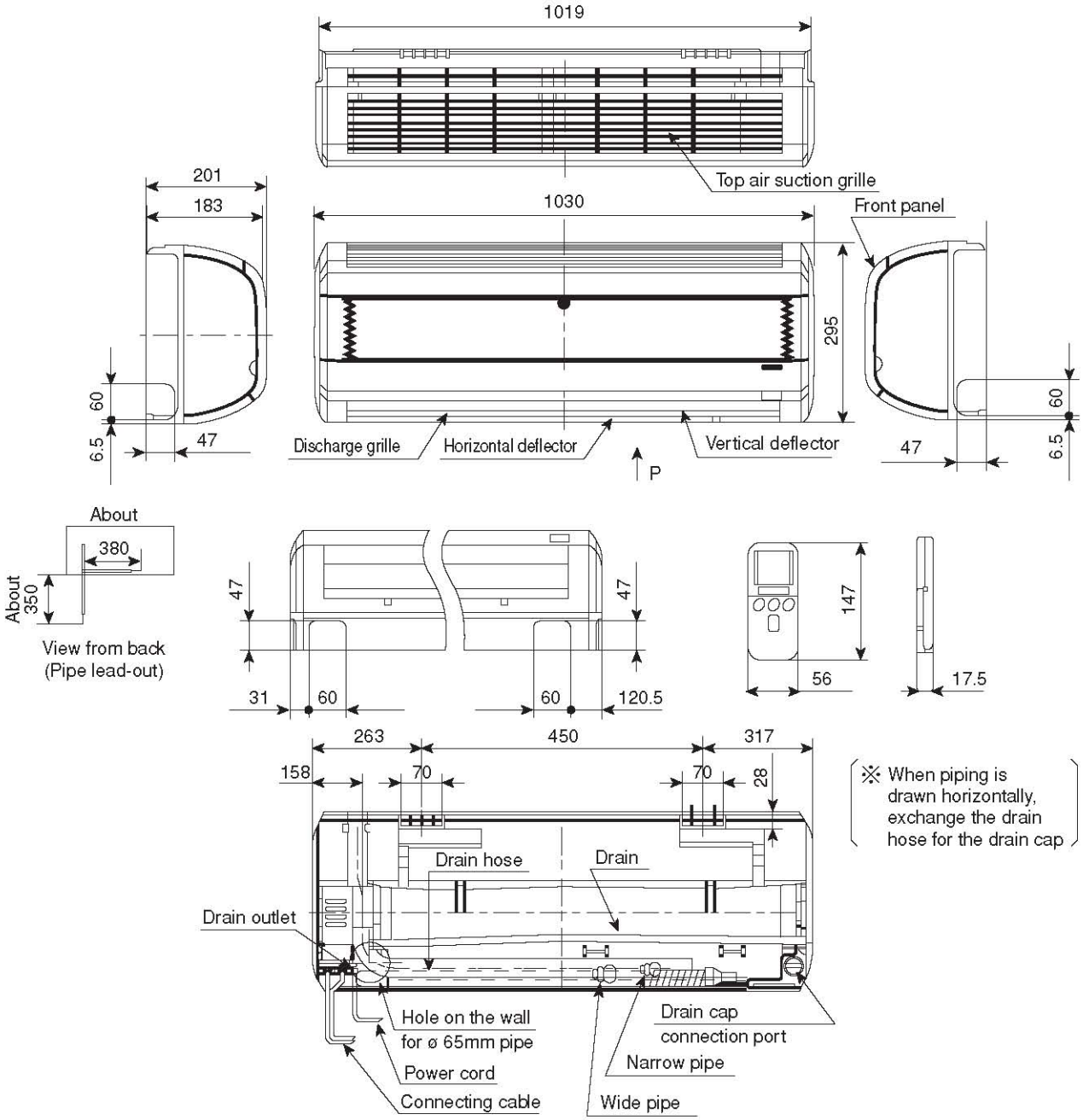

3.3.13. BIGFLOW: RAC-18G4/18GH4

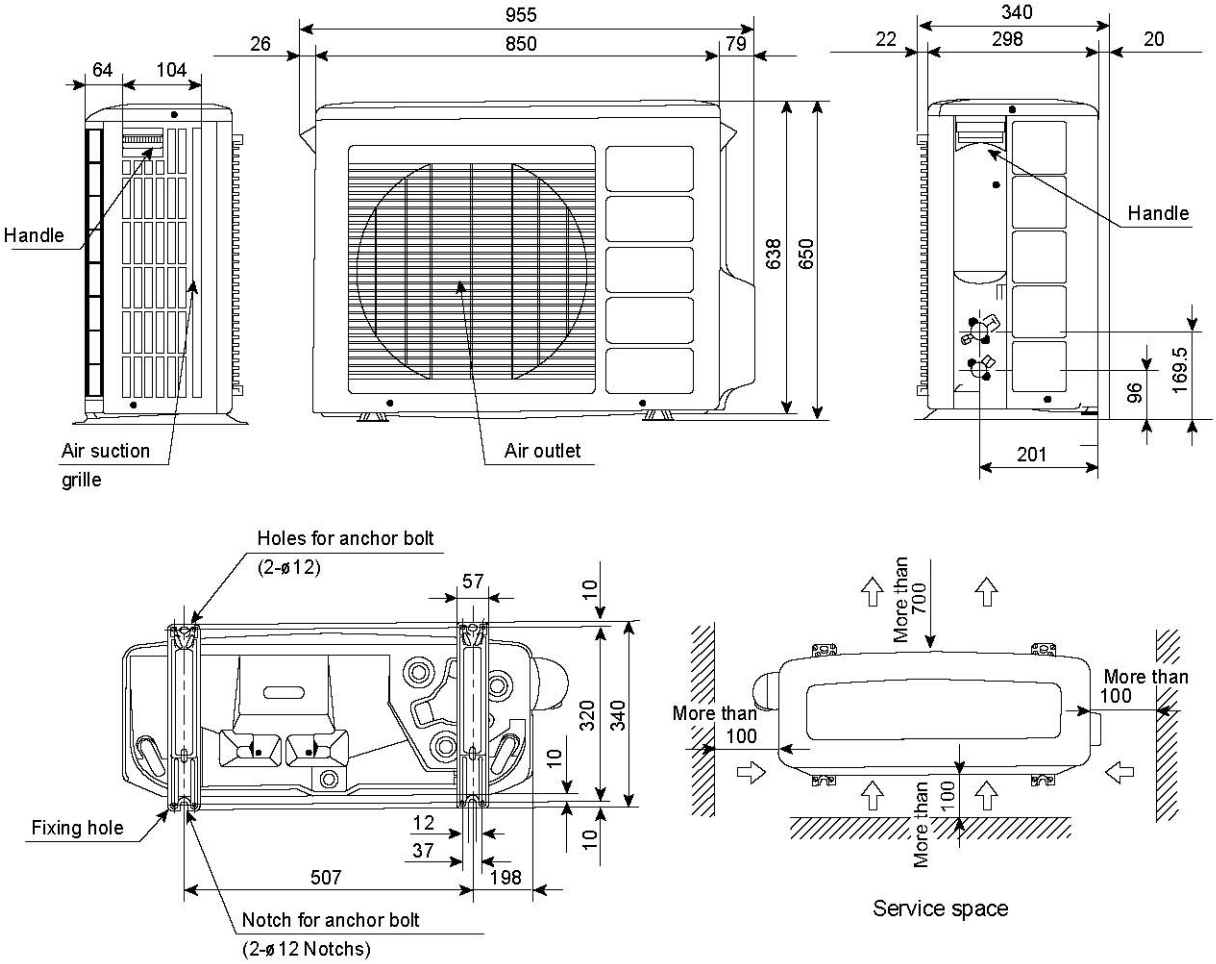

3.3.14. BIGFLOW: RAS-24G4/24GH4

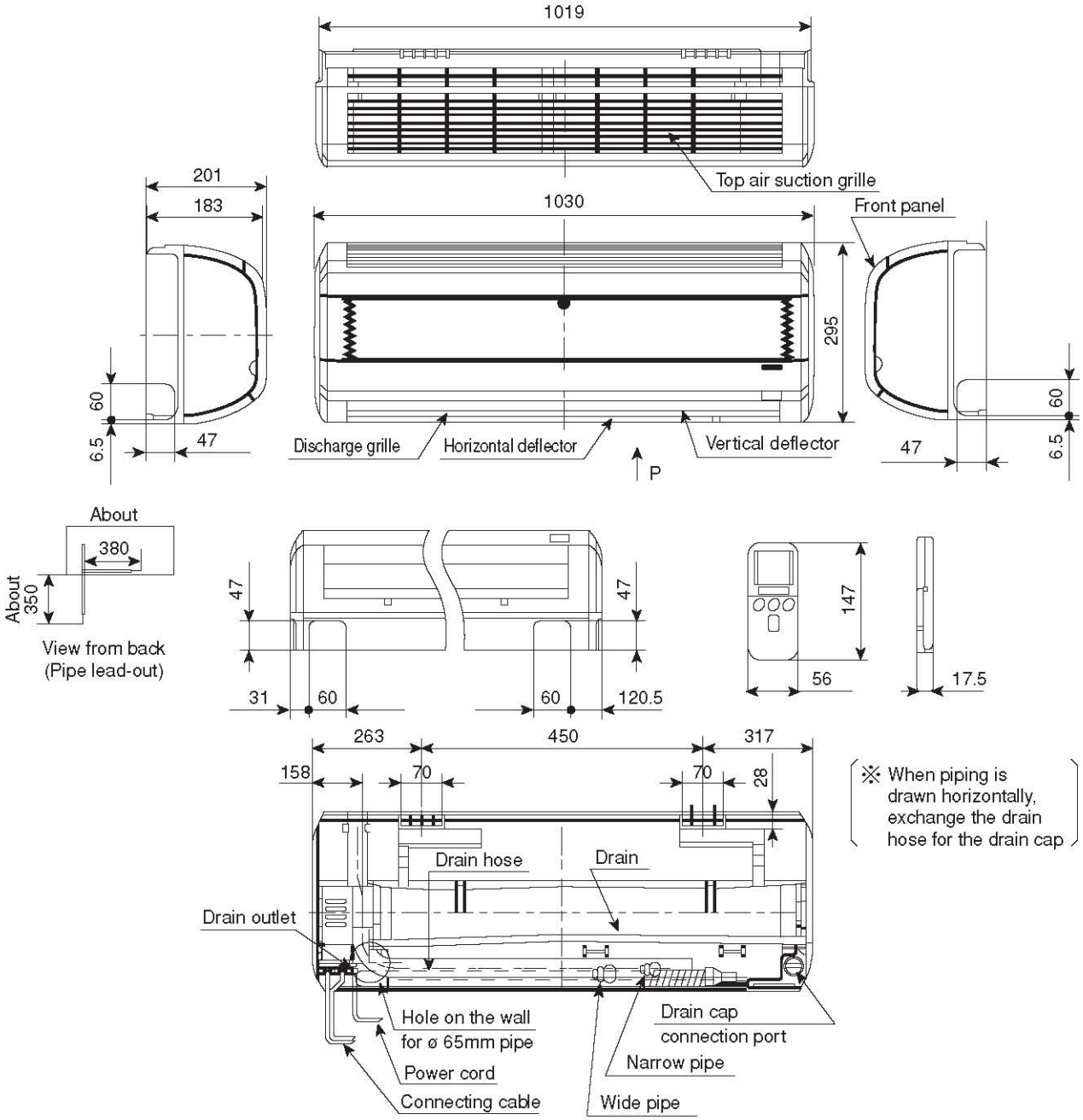

3.3.15. BIGFLOW: RAC-24G4/24GH4

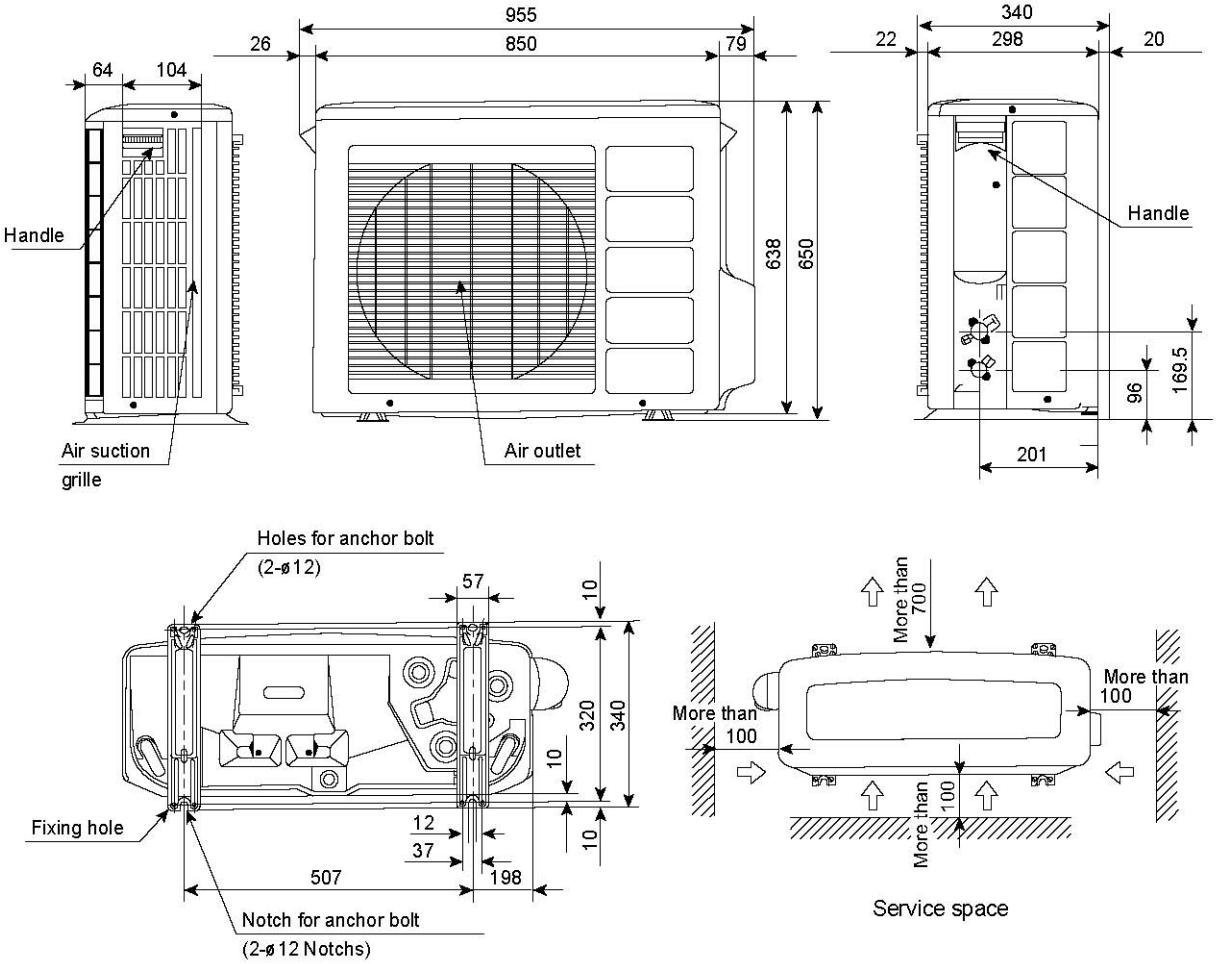

4 CAPACITIES AND SELECTION DATA

CONTENTS

4 CAPACITIES AND SELECTION DATA _____ 4-1

4.1. System Selection Procedure _____ 4-2

4.1.1. Selection Unit Features _____ 4-2
4.1.2. Selection Guide _____ 4-2
4.1.3. Monozone/Multizone combination table _____ 4-3

4.2. Operation Space _____ 4-5

4.2.1. RAI 4-Way Ceiling Cassette Type _____ 5
4.2.2. RAK Wall Type _____ 5
4.2.3. RAF Floor Type _____ 5
4.2.4. Outdoor Units _____ 4-6

4.3. Capacity Characteristic Curves of Outdoor Units _____ 4-7

4.4. Correction Factor According to Piping Length _____ 4-36

4.5. Selection Table _____ 4-41

4.6. Combination Table For Monozone Outdoor _____ 4-56

4.6.1. RAC-25/35/50/60NH5 _____ 4-56

4.7. Combination Table For Multizone Outdoor _____ 4-57

4.7.1. RAM-40QH5 _____ 4-57
4.7.2. RAM-55QH5 _____ 4-58
4.7.3. RAM-65QH5 _____ 4-59
4.7.4. RAM-72QH5 _____ 4-60
4.7.5. RAM-80QH5 _____ 4-61

4.1. SYSTEM SELECTION PROCEDURE

The following system procedure is giving a sample regarding unit selection system, indicating how to use all parameters showed in this chapter.

4.1.1. SELECTION UNIT FEATURES

Considering the building distribution, the possible indoor unit position and the available air flow distribution, select the unit features that are giving the best efficiency and comfort to each room.
Decide the Outdoor Unit position getting easy service maintenance and easy refrigerant pipe installation.

Therefore, the maximum indoor unit capacity combined with outdoor unit should be carefully considered for correct indoor unit distribution at each building

4.1.2. SELECTION GUIDE

The following guide giving the method for indoor and outdoor units selection.

* **Step 1: Determine the system requirements**

Calculate the cooling capacity and heating capacity of each indoor unit according to the following conditions:

Total Load for each room

		Room			
Item		**1**	**2**	**3**	**1+2+3**
Estimated Cooling Load	kW	2.75	4.24	5.35	12.34
Estimated Heating Load	kW	2.90	4.60	6.00	13.50

*Example

Temperature Condition

Cooling	Heating
Outdoor Air Inlet Dry Bulb: 35.0ºC	Outdoor Air Inlet Dry Bulb: 7ºC Wet Bulb: 0ºC
Indoor Air Inlet Dry Bulb: 27,0ºC Wet Bulb: 19.5ºC	Indoor Air Inlet Dry Bulb: 20ºC

*Example

* **Step 2**: **Select Unit Capacity Performance**

The unit kW is selected following the Cooling capacity and Heating capacity showed in the combination table.

* **Step 3**: **Read Selected Capacity Performance**

The unit performance should be calculated considering the following correction factors:

1. **Cooling and Heating piping length**
2. **Outdoor unit performance capacity**
3. **Indoor unit performance capacity for each room cooling load**

Kindly refer to the unit selection combination table for correct capacity performance.

4.1.3. MONOZONE/MULTIZONE COMBINATION TABLE

Type						Dual	Dual	Triple	Quad	Quad
Model Name						RAM40QH5	RAM55QH5	RAM65QH5	RAM72QH5	RAM80QH5
Product Image										
Combination					Total					
ONE UNIT	1.8				1.8					
	2.5				2.5					
	3.5				3.5					
	5.0				5.0					
	6.0				6.0					
TWO UNITS	1.8	1.8			3.6	*	*	*	*	*
	1.8	2.5			4.3	*	*	*	*	*
	1.8	3.5			5.3	*	*	*	*	*
	1.8	5.0			6.8		*	*	*	*
	1.8	6.0			7.8				*	
	2.5	2.5			5.0	*	*	*	*	*
	2.5	3.5			6.0	*	*	*	*	*
	2.5	5.0			7.5		*	*	*	*
	2.5	6.0			8.5				*	
	3.5	3.5			7.0		*	*	*	*
	3.5	5.0			8.5			*	*	*
	3.5	6.0			9.5				*	
	5.0	5.0			10.0				*	*
	5.0	6.0			11.0				*	
THREE UNITS	1.8	1.8	1.8		5.4			*	*	*
	1.8	1.8	2.5		6.1			*	*	*
	1.8	1.8	3.5		7.1			*	*	*
	1.8	1.8	5.0		8.6			*	*	*
	1.8	1.8	6.0		9.6				*	
	1.8	2.5	2.5		6.8			*	*	*
	1.8	2.5	3.5		7.8			*	*	*
	1.8	2.5	5.0		9.3				*	*
	1.8	2.5	6.0		10.3				*	
	1.8	3.5	3.5		8.8			*	*	*
	1.8	3.5	5.0		10.3				*	*
	1.8	5.0	5.0		11.8					*
	2.5	2.5	2.5		7.5			*	*	*
	2.5	2.5	3.5		8.5			*	*	*
	2.5	2.5	5.0		10.0				*	*
	2.5	2.5	6.0		11.0				*	
	2.5	3.5	3.5		9.5				*	*
	2.5	3.5	5.0		11.0				*	*
	3.5	3.5	3.5		10.5				*	*
	3.5	3.5	5.0		12.0					*

Type						Dual	Dual	Triple	Quad	Quad
Model Name						RAM40QH5	RAM55QH5	RAM65QH5	RAM72QH5	RAM80QH5
Product Image										
Combination					Total					
FOUR UNITS	1.8	1.8	1.8	1.8	7.2				*	*
	1.8	1.8	1.8	2.5	7.9				*	*
	1.8	1.8	2.5	2.5	8.6				*	*
	1.8	1.8	1.8	3.5	8.9				*	*
	1.8	1.8	2.5	3.5	9.6				*	*
	1.8	1.8	1.8	5.0	10.4				*	*
	1.8	1.8	2.5	5.0	11.1					*
	1.8	1.8	3.5	3.5	10.6				*	*
	1.8	2.5	2.5	2.5	9.3				*	*
	1.8	2.5	2.5	5.0	11.8					*
	1.8	2.5	2.5	3.5	10.3				*	*
	1.8	2.5	3.5	3.5	11.3					*
	2.5	2.5	2.5	2.5	10.0				*	*
	2.5	2.5	2.5	3.5	11.0				*	*
	2.5	2.5	3.5	3.5	12.0					*
MAX TOTAL COMBINATION CAPACITY						6.0	7.5	8.8	11.0	12.0

*Two indoor should be connected at least

4.2. OPERATION SPACE

4.2.1. 4-WAY CEILING CASSETTE TYPE

Models: RAI-25/35/50 NH5

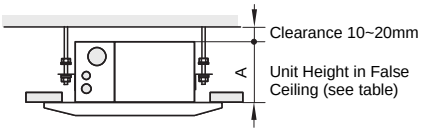

Indoor Unit	Unit height A (mm)
RAI-25NH5	285
RAI-35NH5	
RAI-50NH5	

Service Space

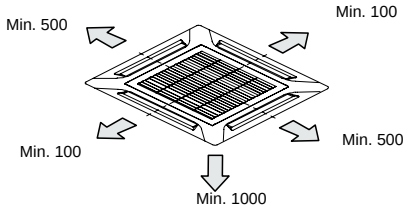

Distance from Wall Side

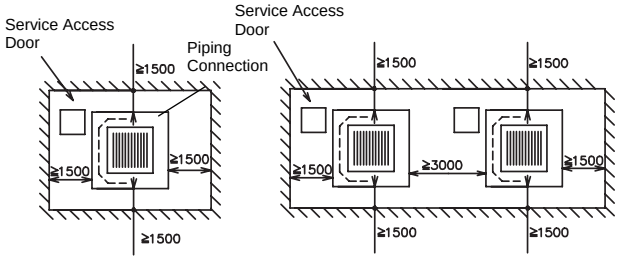

Space around Indoor Unit (mm)

4.2.2. WALL TYPE

Models: RAK-18/25/35/50/65NH5
Models: RAS-07/09/14/18/24G4
Models RAS-07/09/14/18/24GH4
Models RAS-18/25/35/50/60/70/80YH5

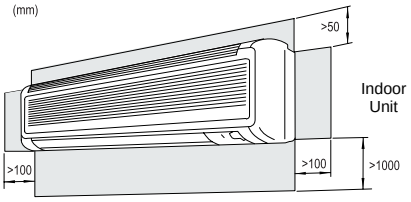

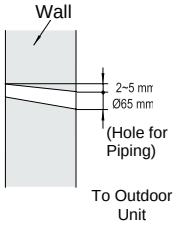

Operation and Installation Space (Hole for Piping on the Wall)

4.2.3. FLOOR TYPE

Models: RAF-25/35/50NH5

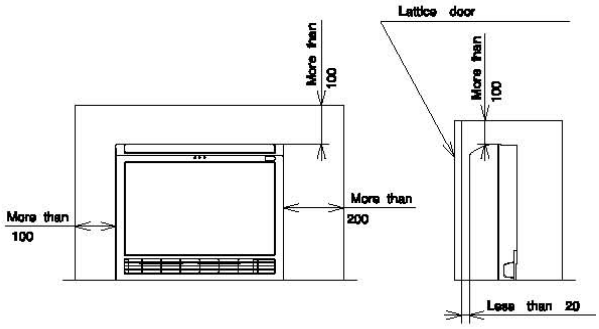

4.2.4. OUTDOOR UNITS

Models: RAM-55/65QH5

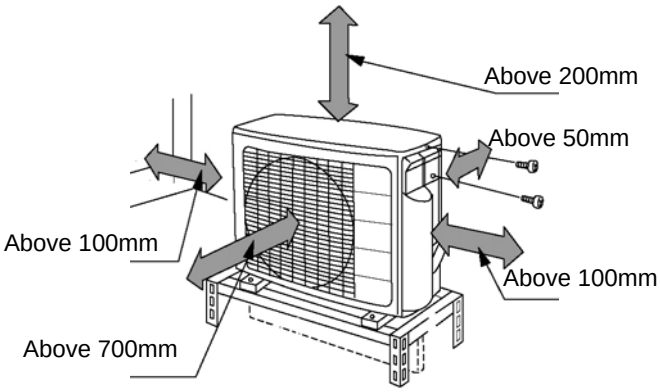

Models: RAC-07/09G4
Models: RAC-07/09GH4

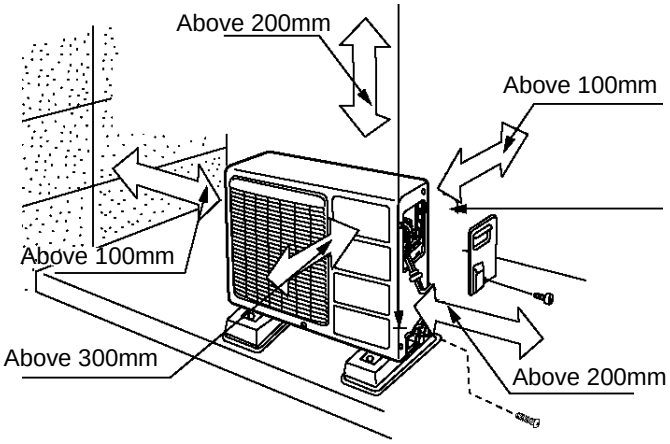

Models: RAM-72QH5

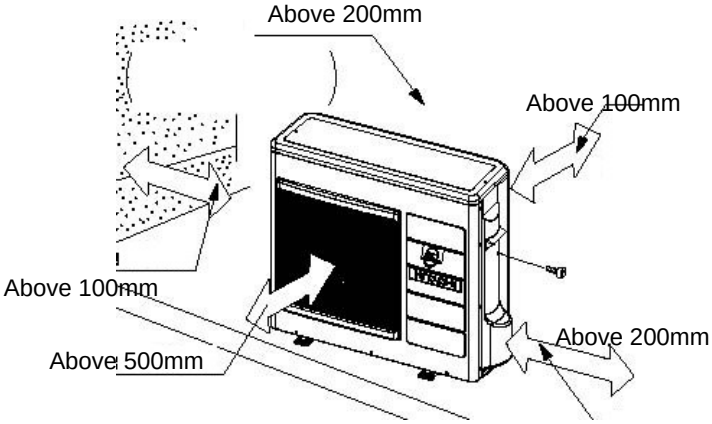

Models: RAC-14/18/24G4
Models: RAC-14/18/24GH4
Models: RAC-50YH5
Models: RAC-60YH5

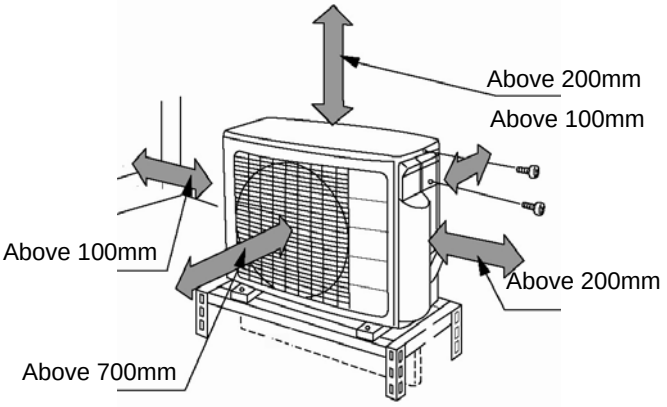

Models: RAM-80QH5

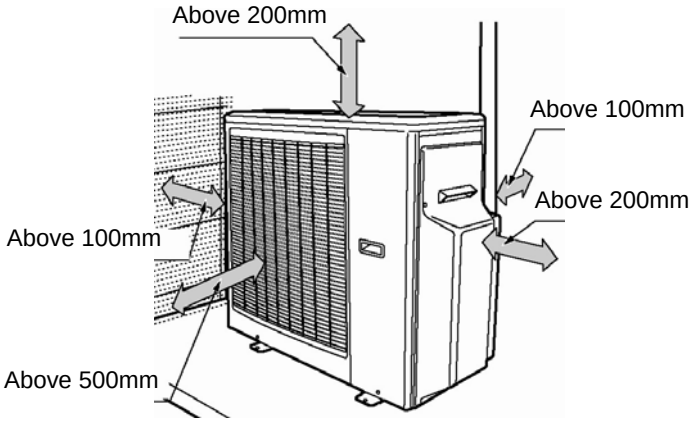

Models: RAC-18/25/35YH5

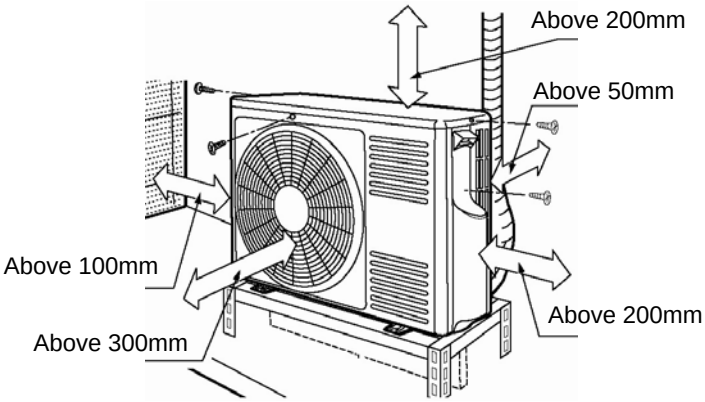

4.3. CAPACITY CHARACTERISTIC CURVES OF OUTDOOR UNITS

The following charts show the characteristics of outdoor unit capacity, which corresponds with the operating ambient temperature of outdoor unit. These characteristic curves are only applicable to mono-multi outdoors.
See the examples of the actual combinations.

Cooling Capacity

Cooling Characteristic Curve of RAK/RAC-25NH5

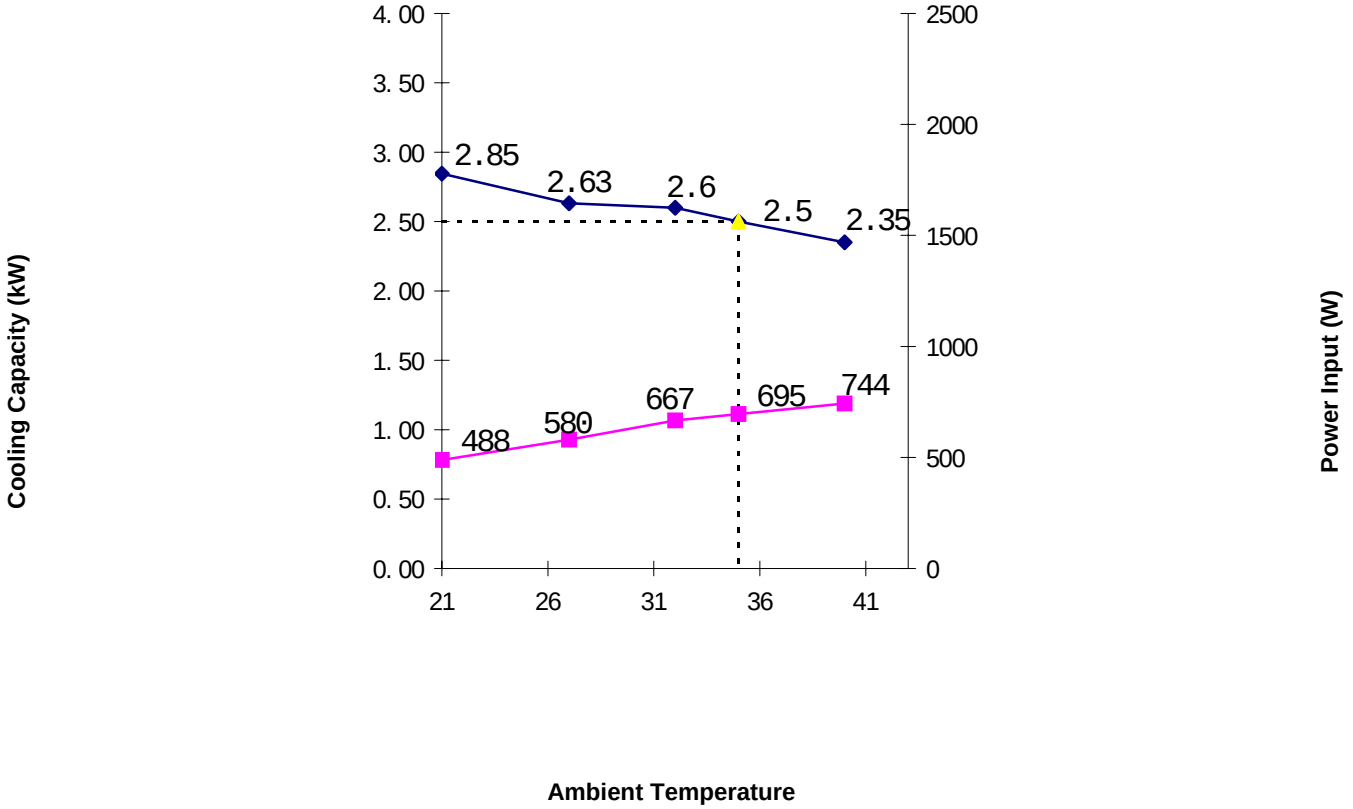

Heating Capacity

Heating Characteristic Curve of RAK/RAC-25NH5

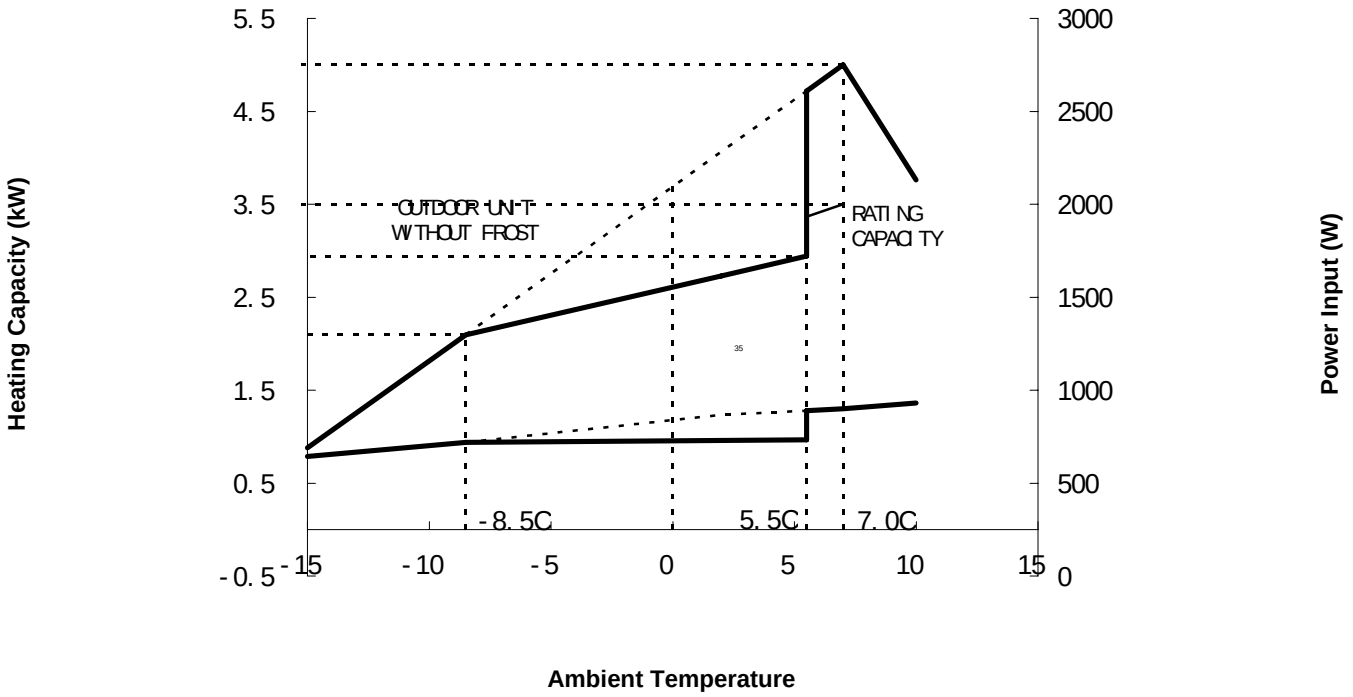

Cooling Capacity

Cooling Characteristic Curve of RAK/RAC-35NH5

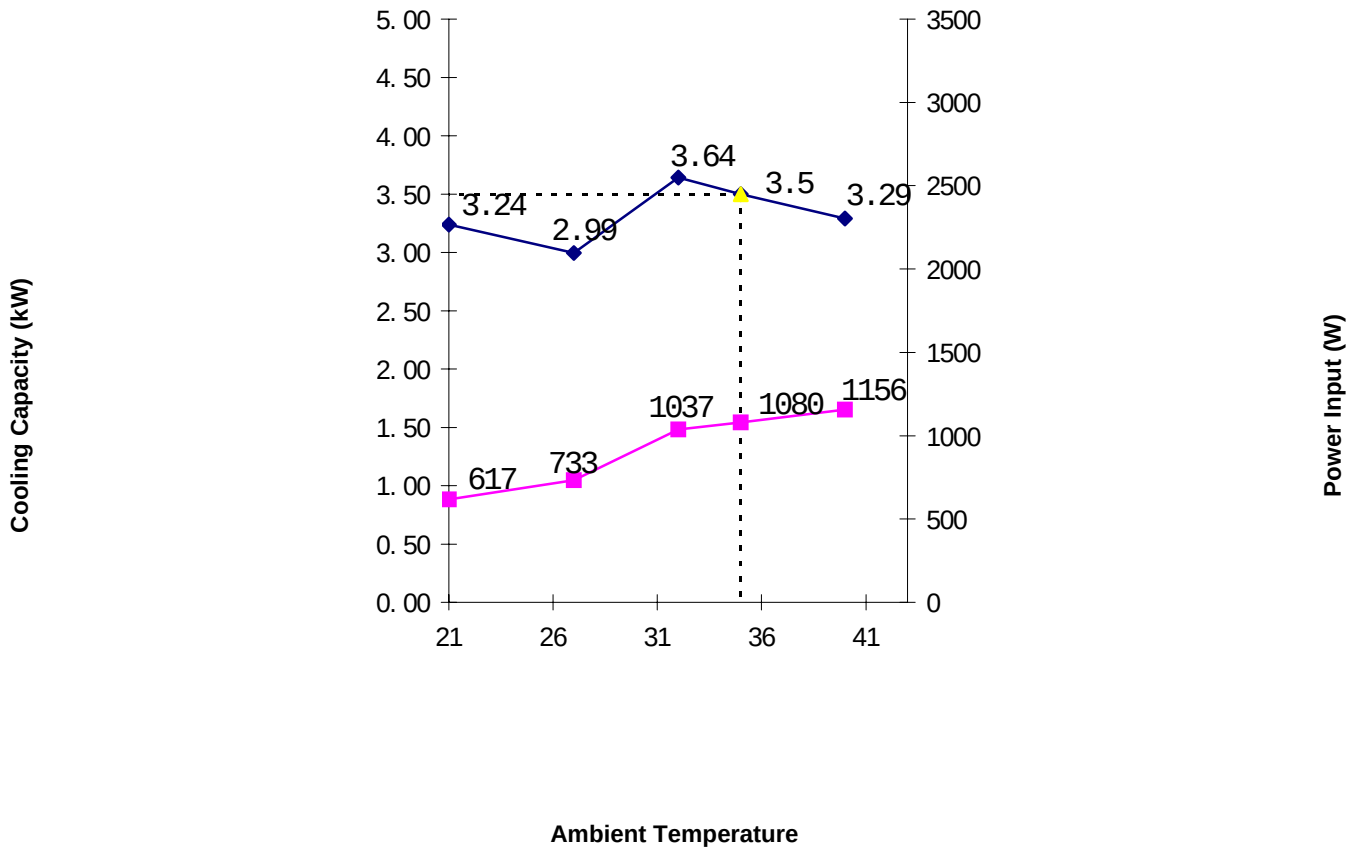

Heating Capacity

Heating Characteristic Curve of RAK/RAC-35NH5

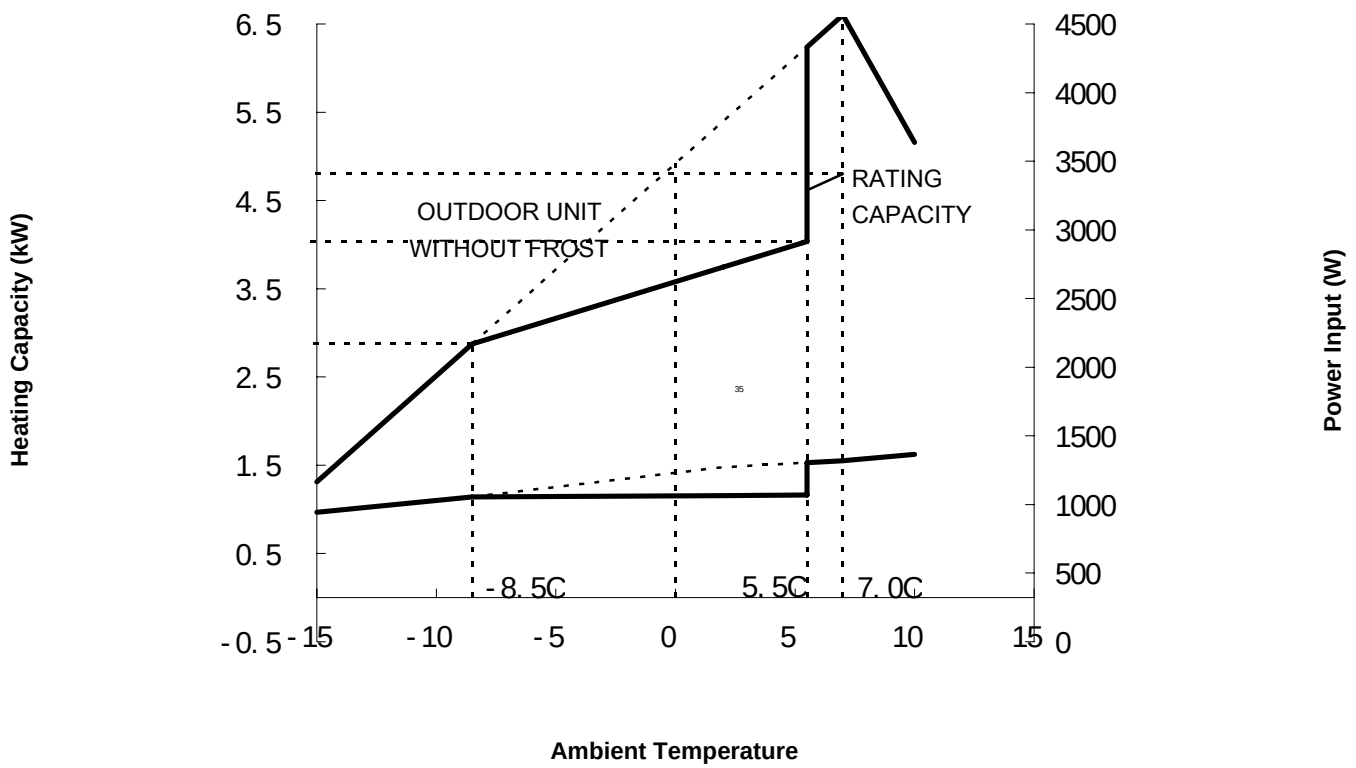

Cooling Capacity

Cooling Characteristic Curve of RAK/RAC-50NH5

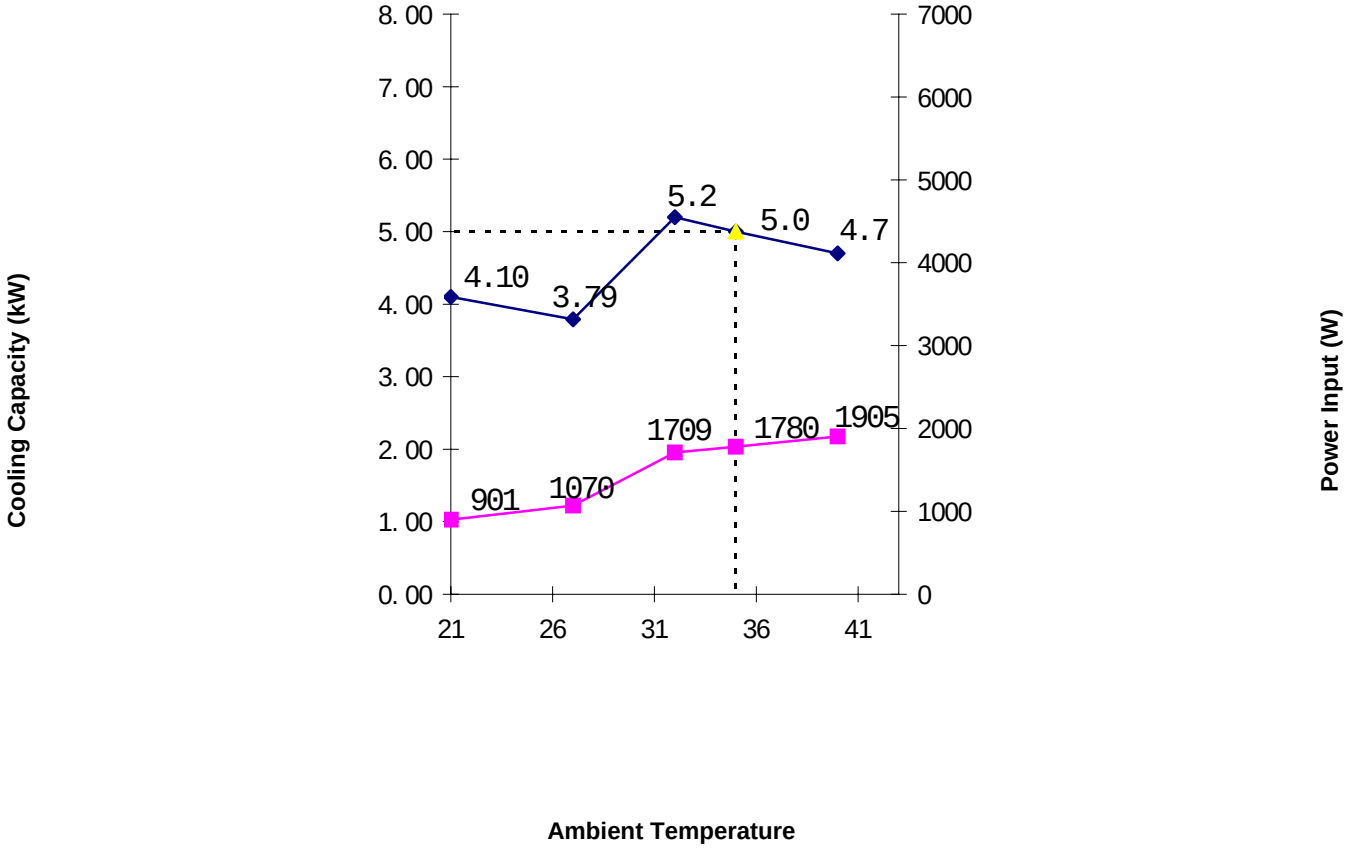

Heating Capacity

Heating Characteristic Curve of RAK/RAC-50NH5

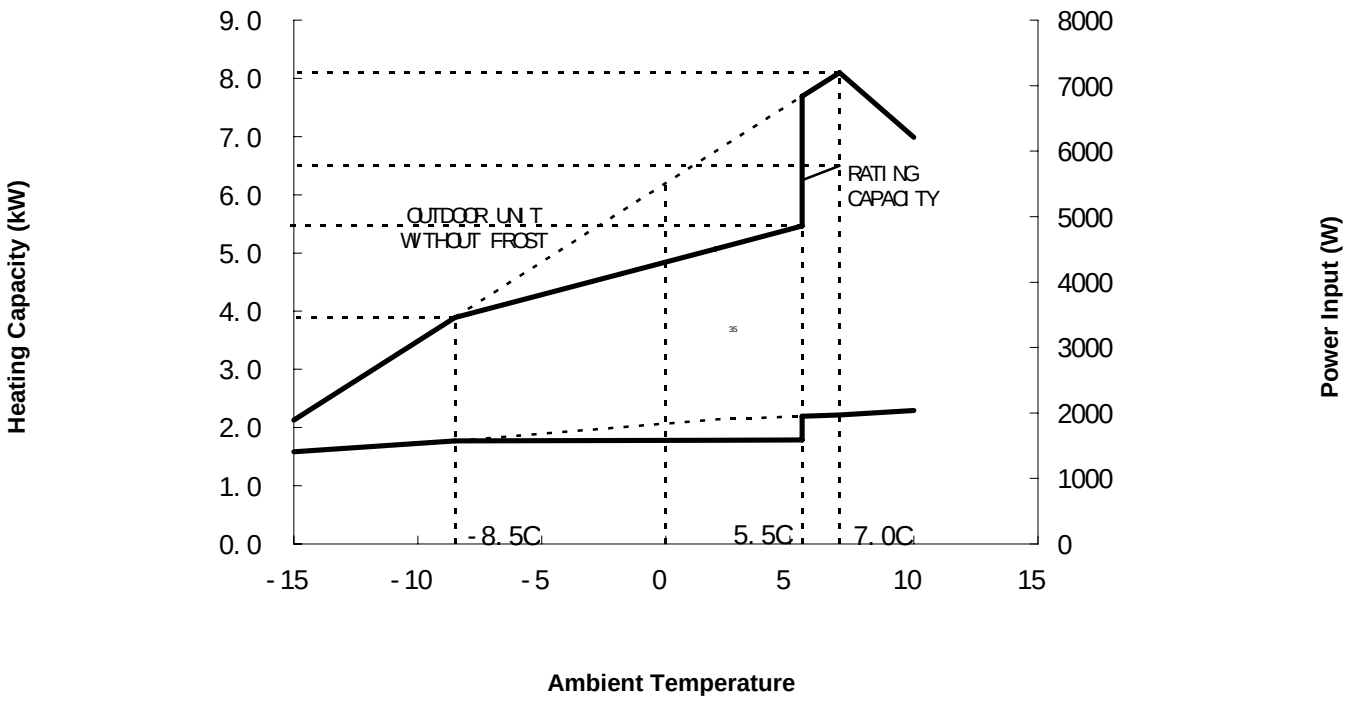

Cooling Capacity

Cooling Characteristic Curve of RAK/RAC-65NH5

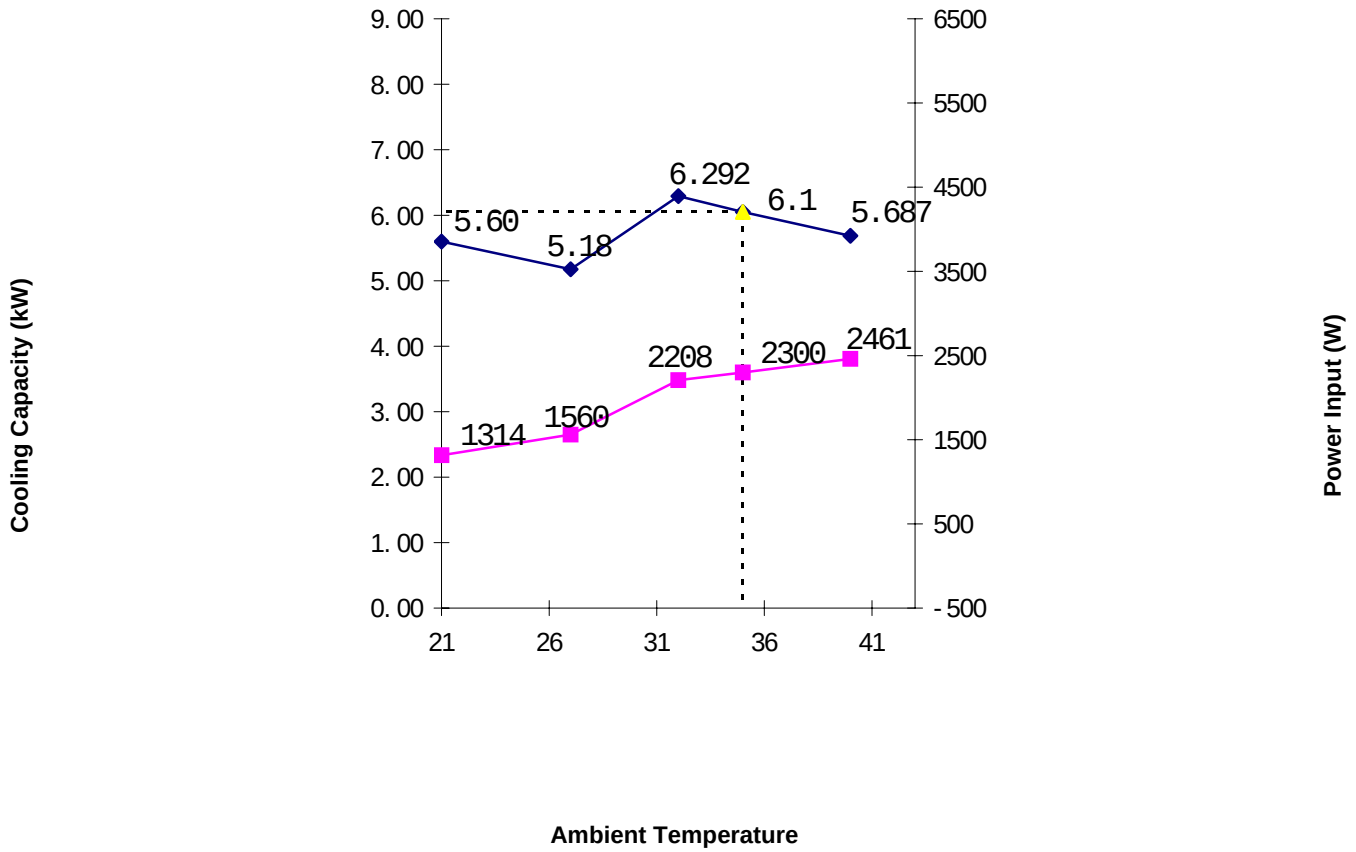

Heating Capacity

Heating Characteristic Curve of RAK/RAC-65NH5

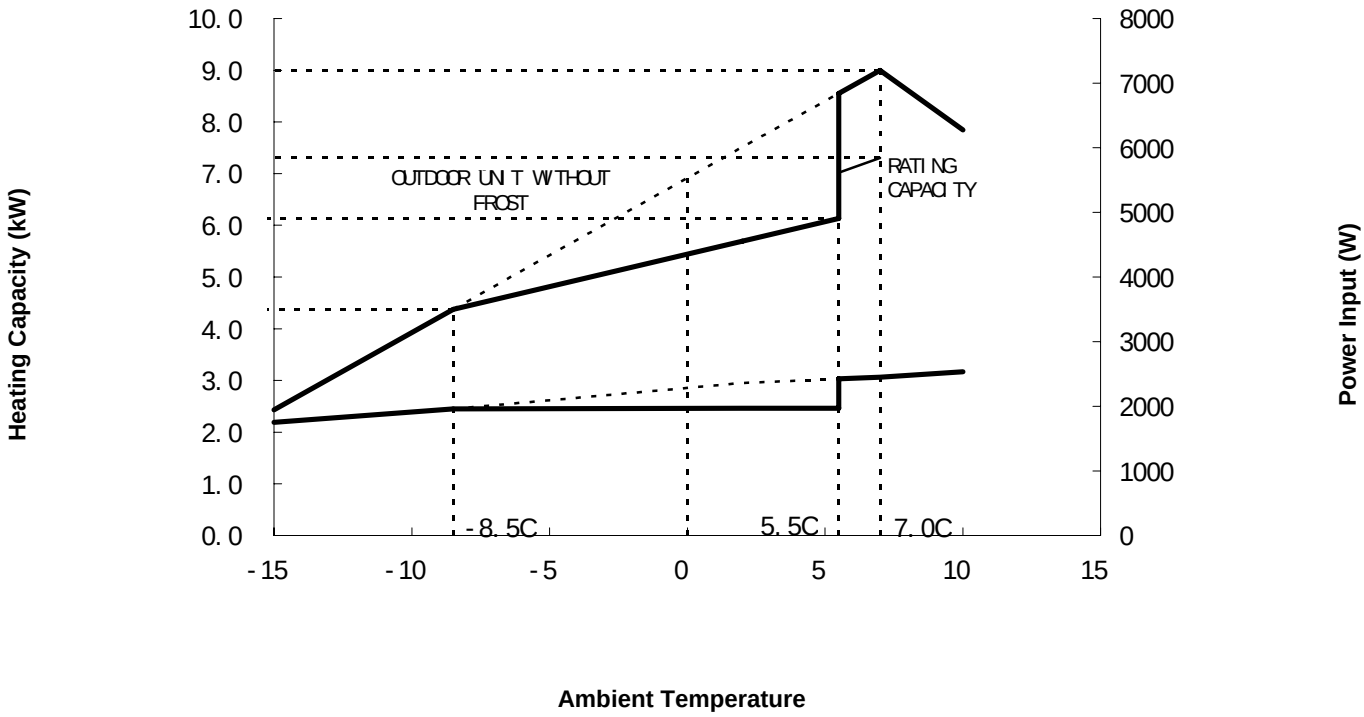

Cooling Capacity

Cooling Characteristic Curve of RAI/RAC-25NH5

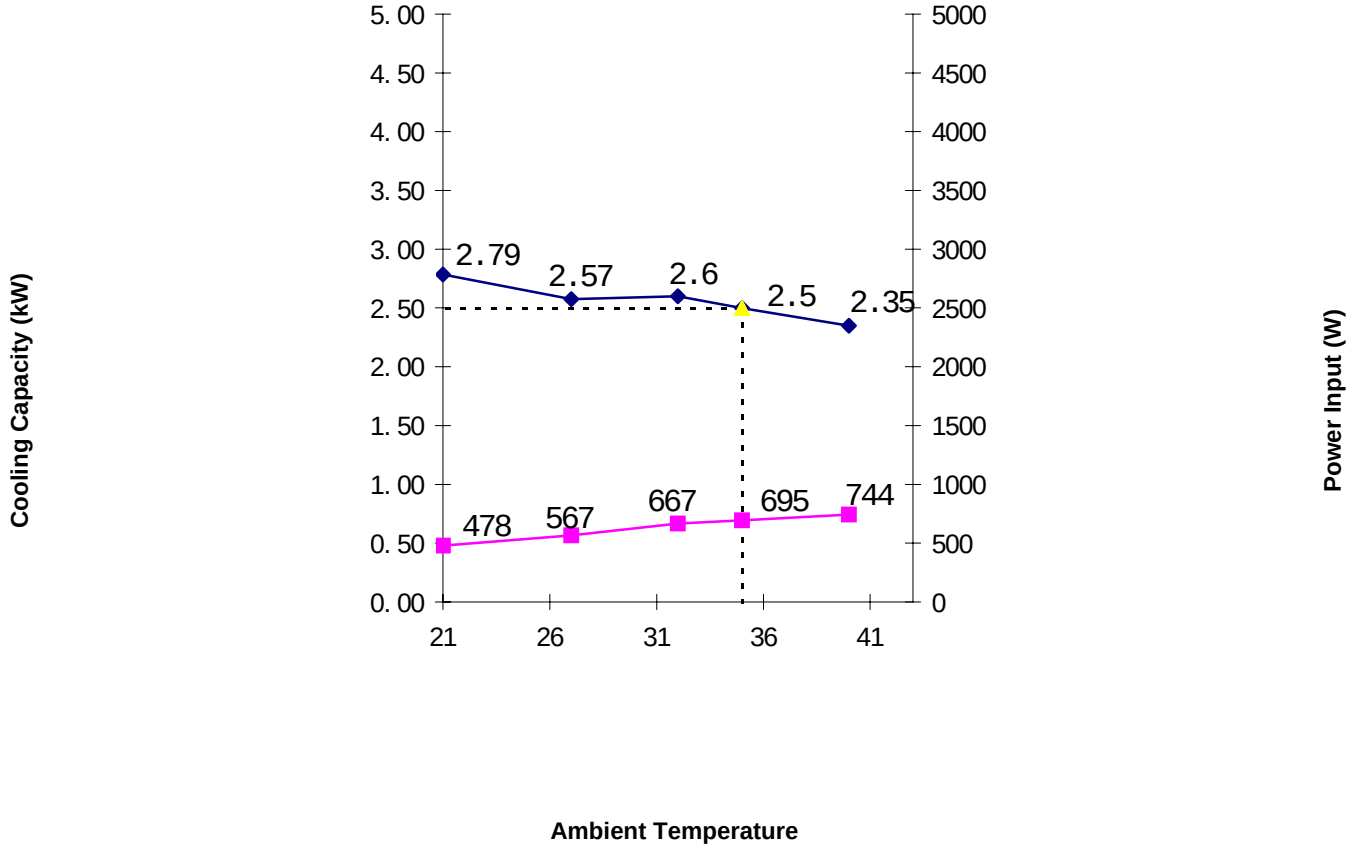

Heating Capacity

Heating Characteristic Curve of RAI/RAC-25NH5

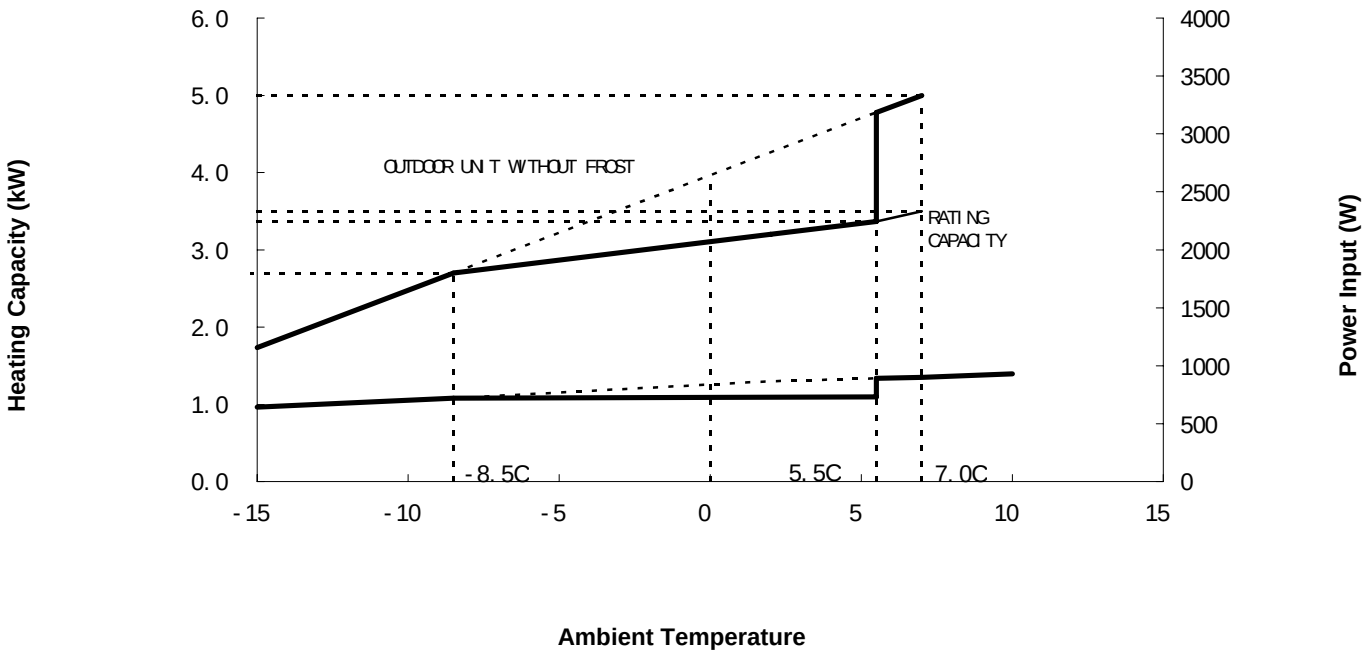

Cooling Capacity

Cooling Characteristic Curve of RAI/RAC-35NH5

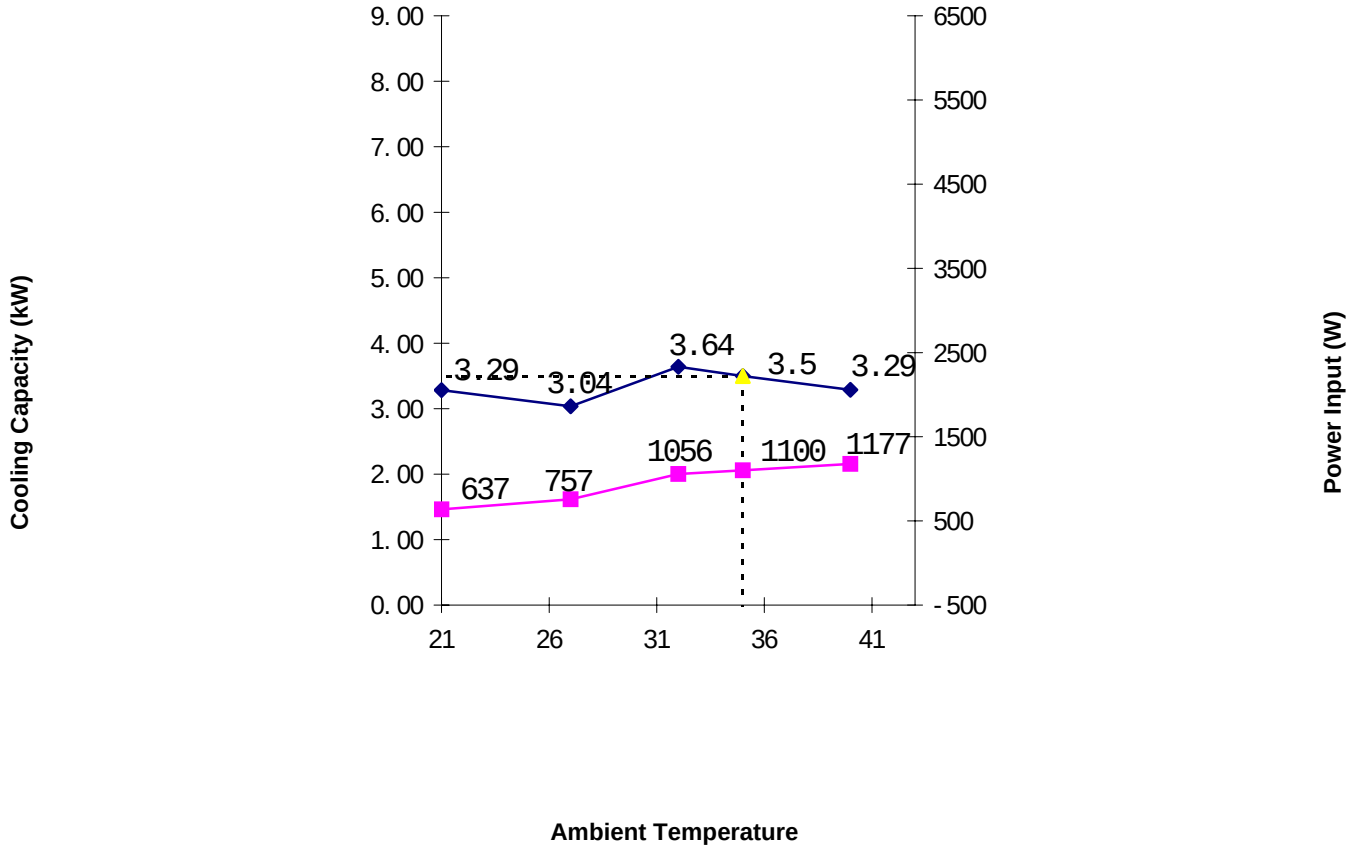

Heating Capacity

Heating Characteristic Curve of RAI/RAC-35NH5

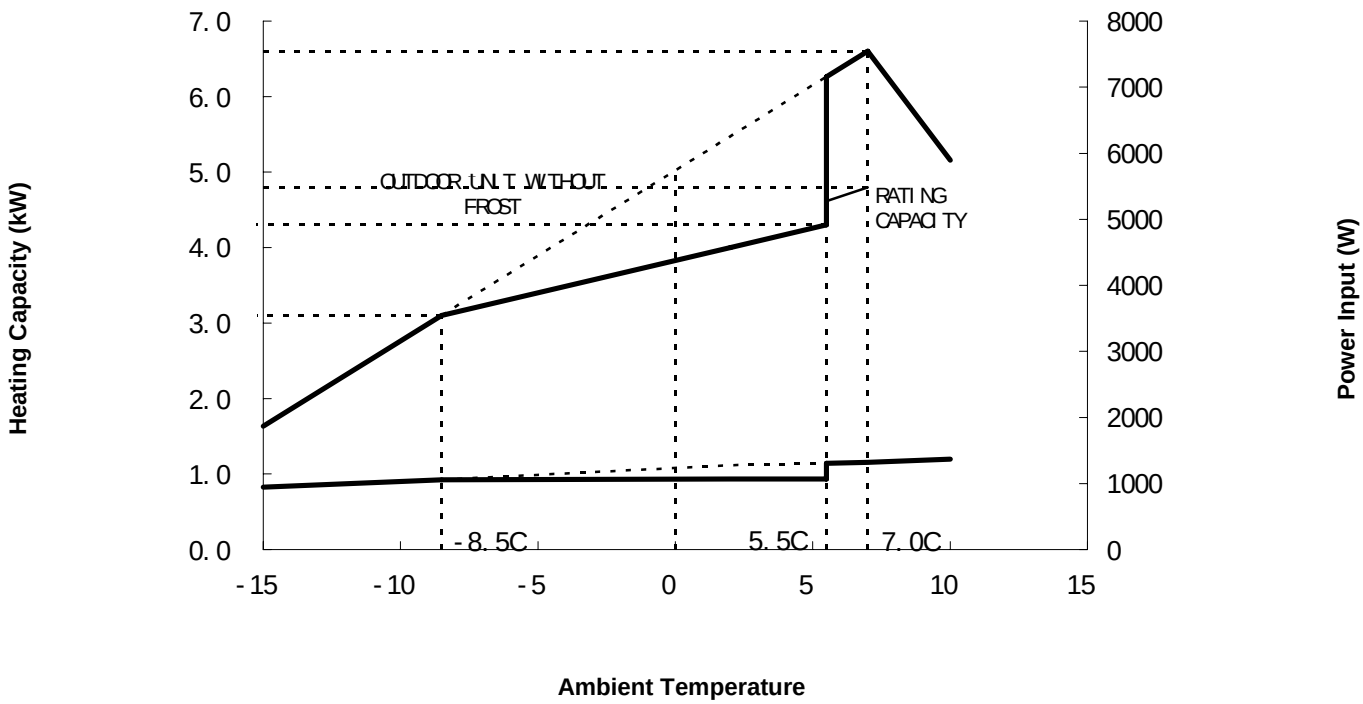

Cooling Capacity

Cooling Characteristic Curve of RAI/RAC-50NH5

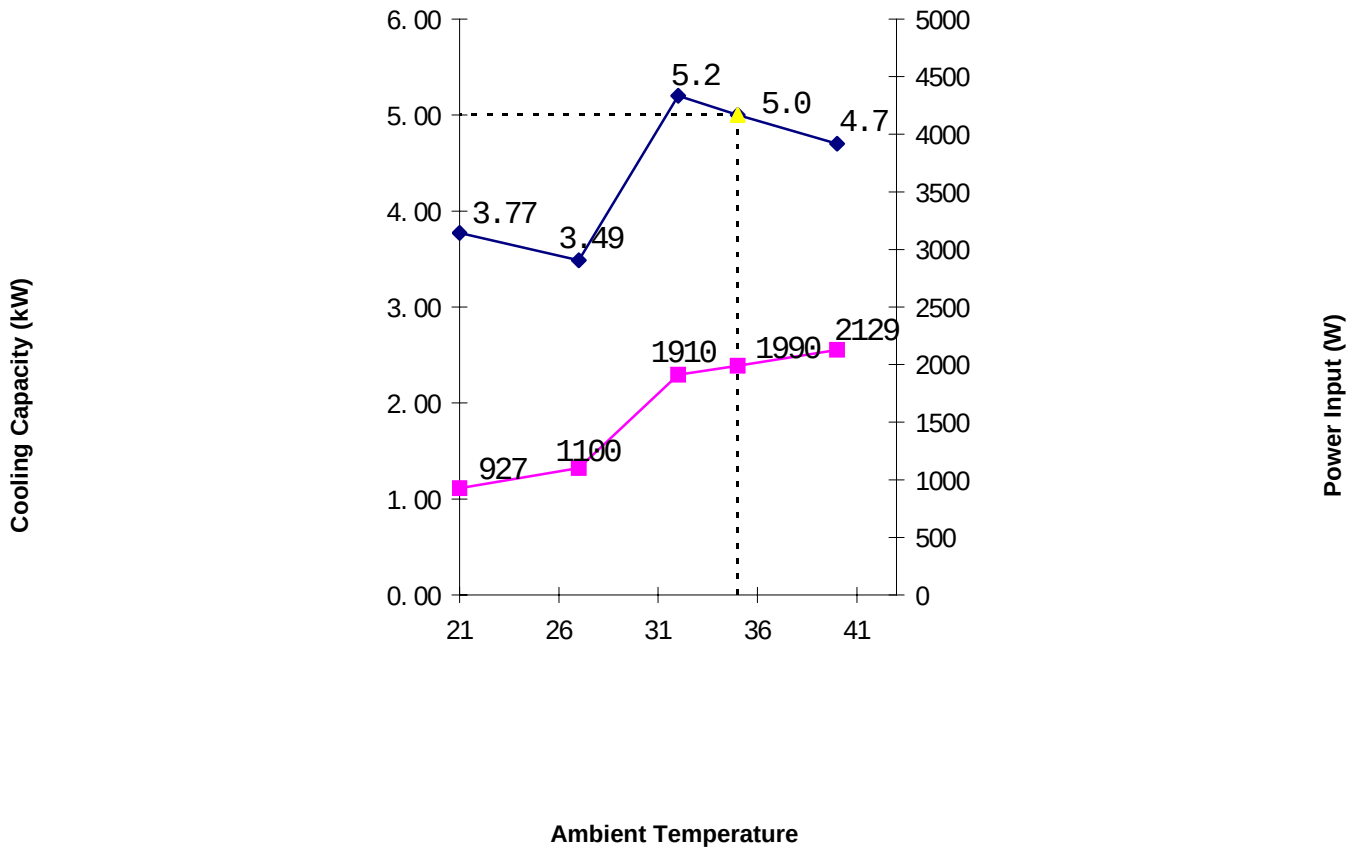

Heating Capacity

Heating Characteristic Curve of RAI/RAC-50NH5

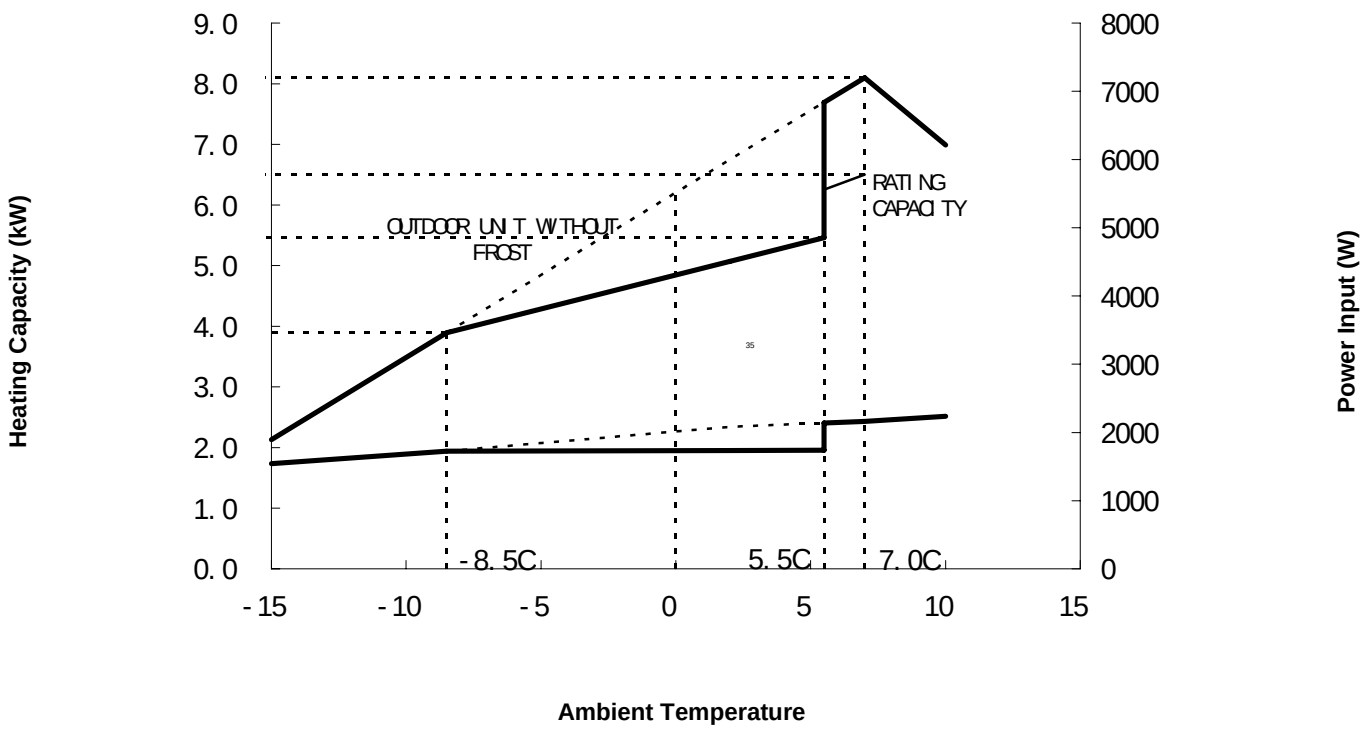

Cooling Capacity

Cooling Characteristic Curve of RAD/RAC-25NH5

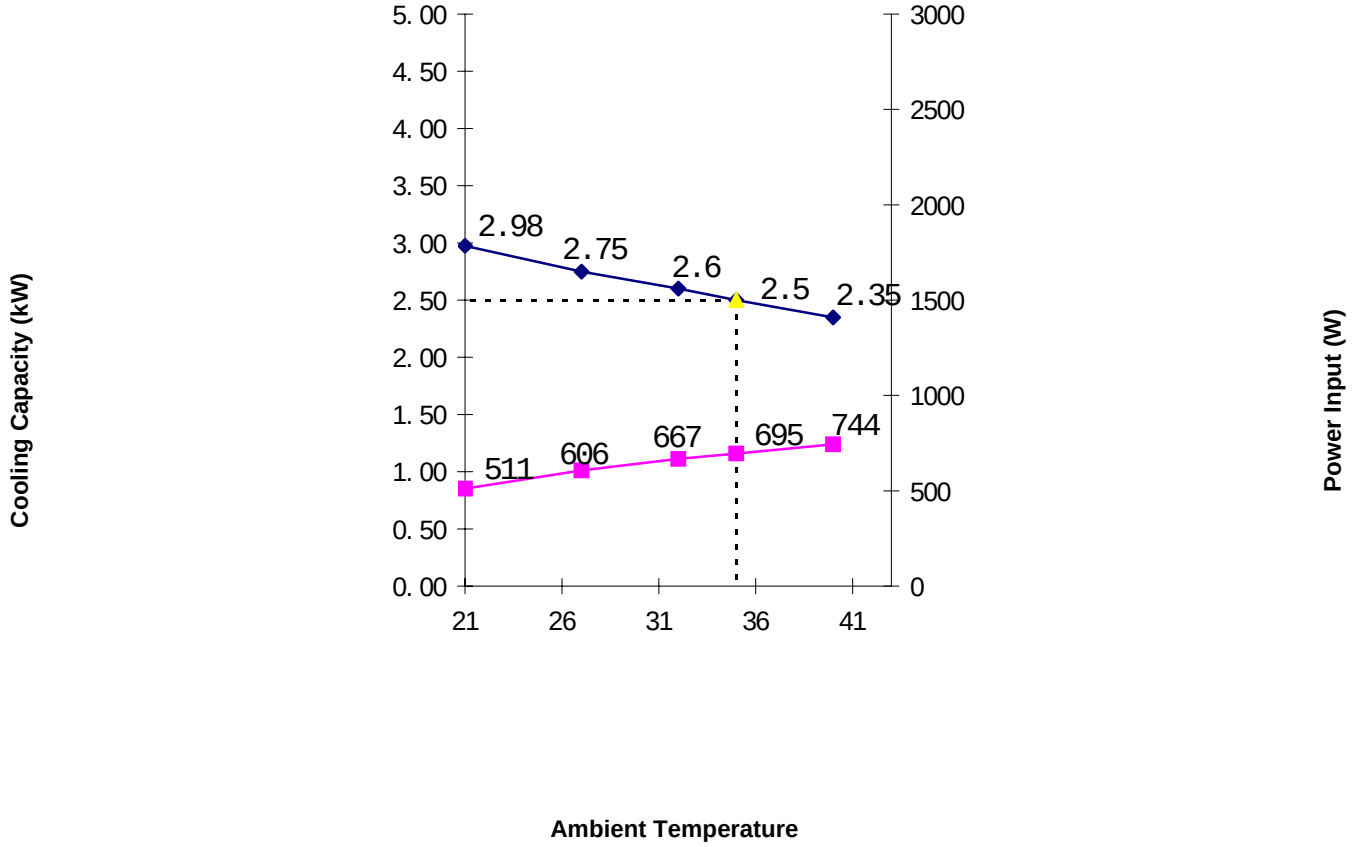

Heating Capacity

Heating Characteristic Curve of RAD/RAC-25NH5

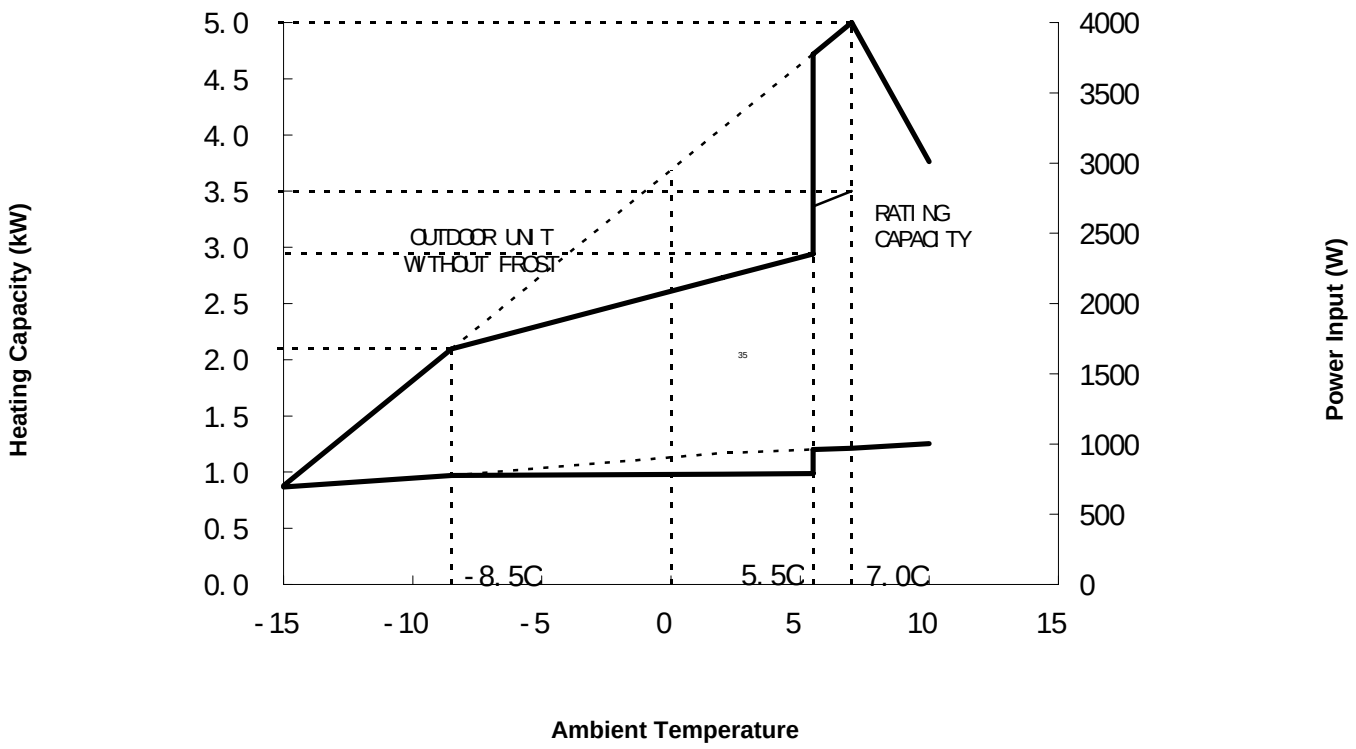

Cooling Capacity

Cooling Characteristic Curve of RAD/RAC-35NH5

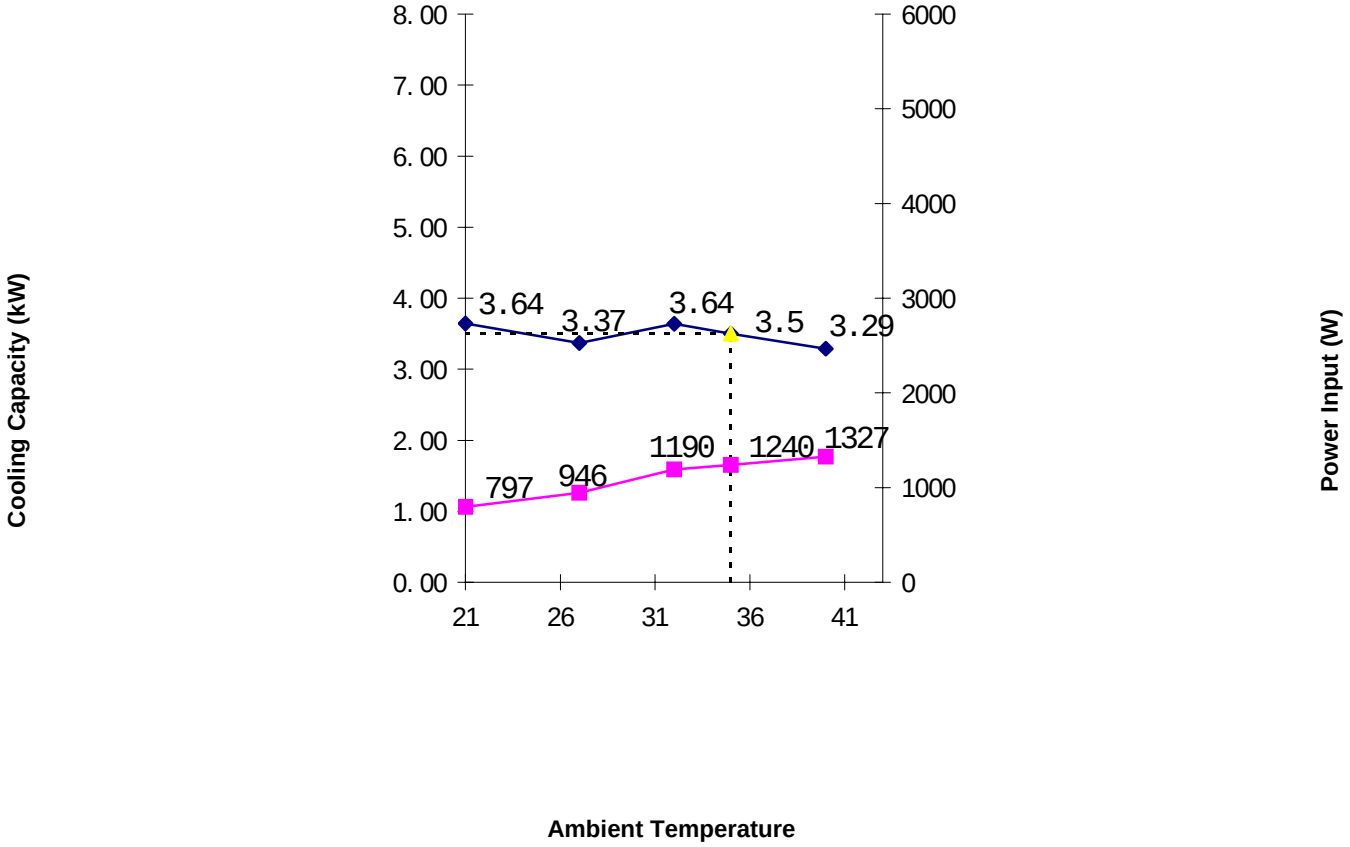

Heating Capacity

Heating Characteristic Curve of RAD/RAC-35NH5

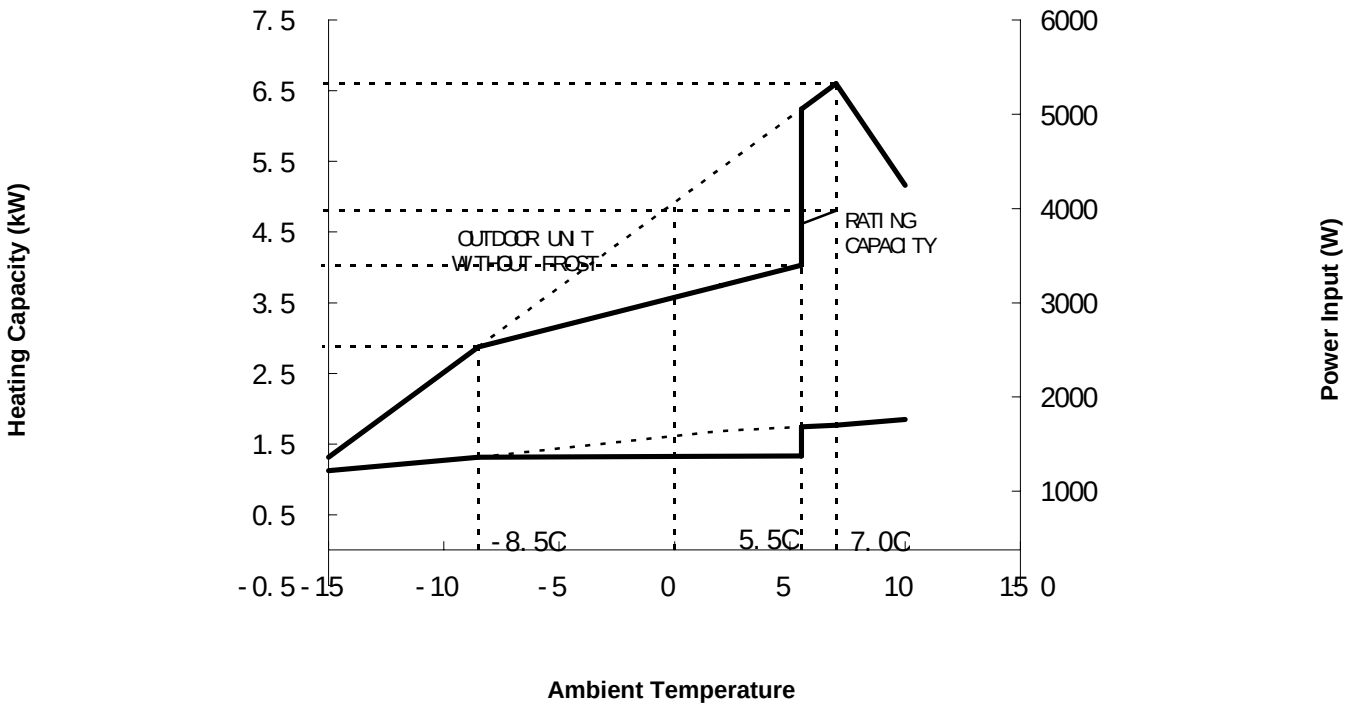

Cooling Capacity

Cooling Characteristic Curve of RAF/RAC-25NH5

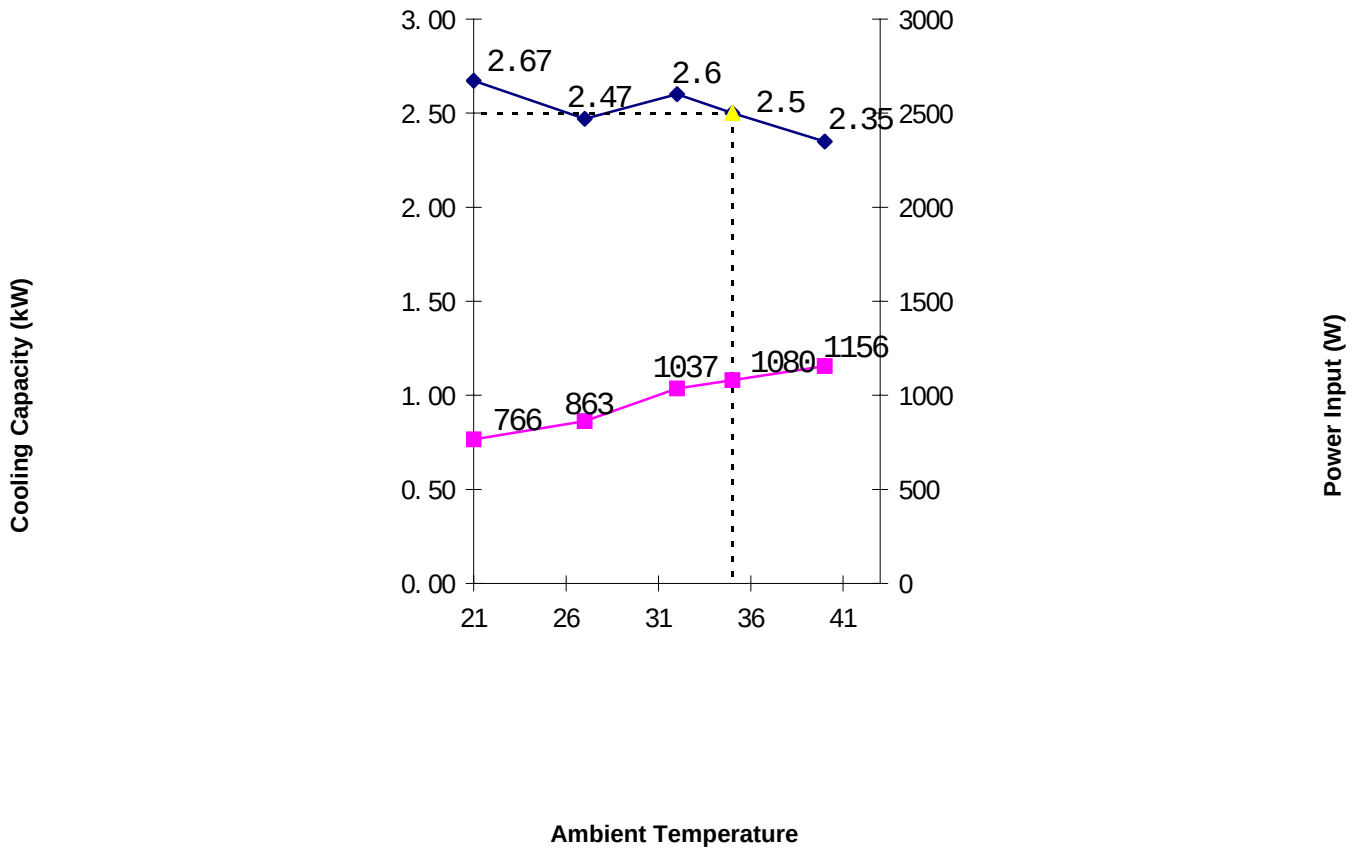

Heating Capacity

Heating Characteristic Curve of RAF/RAC-25NH5

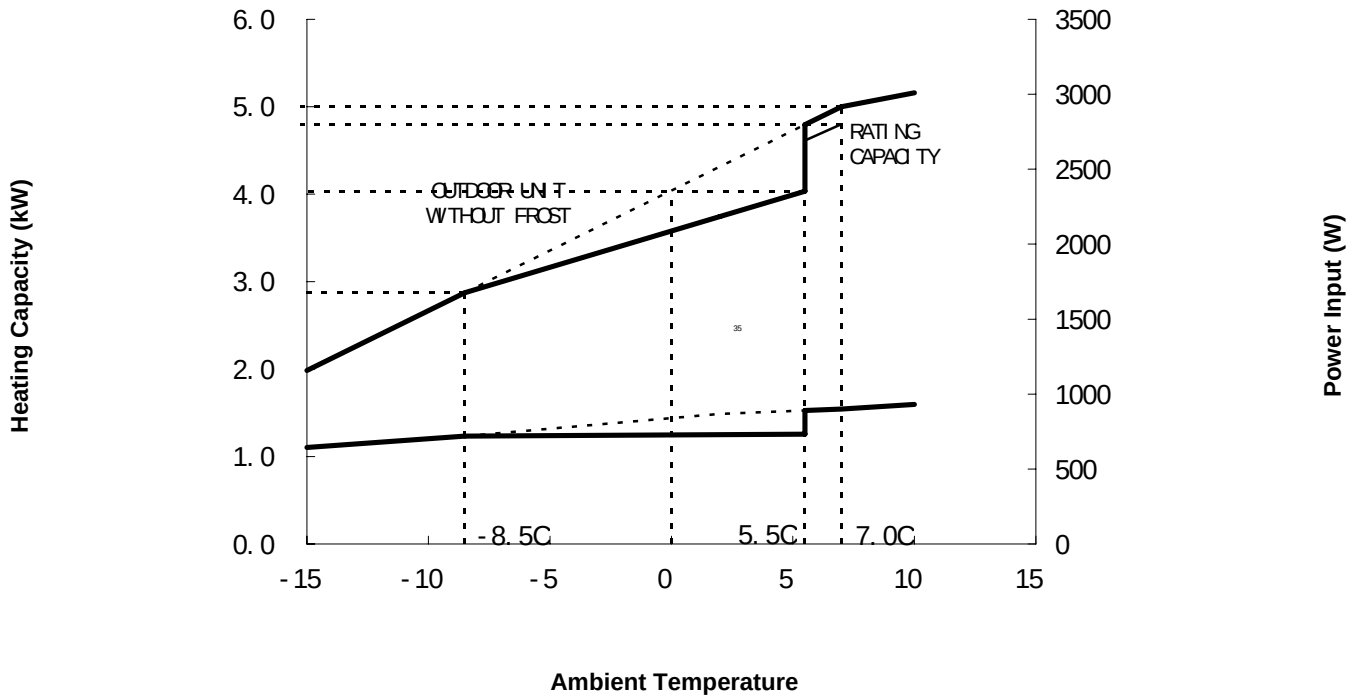

Cooling Capacity

Cooling Characteristic Curve of RAF/RAC-35NH5

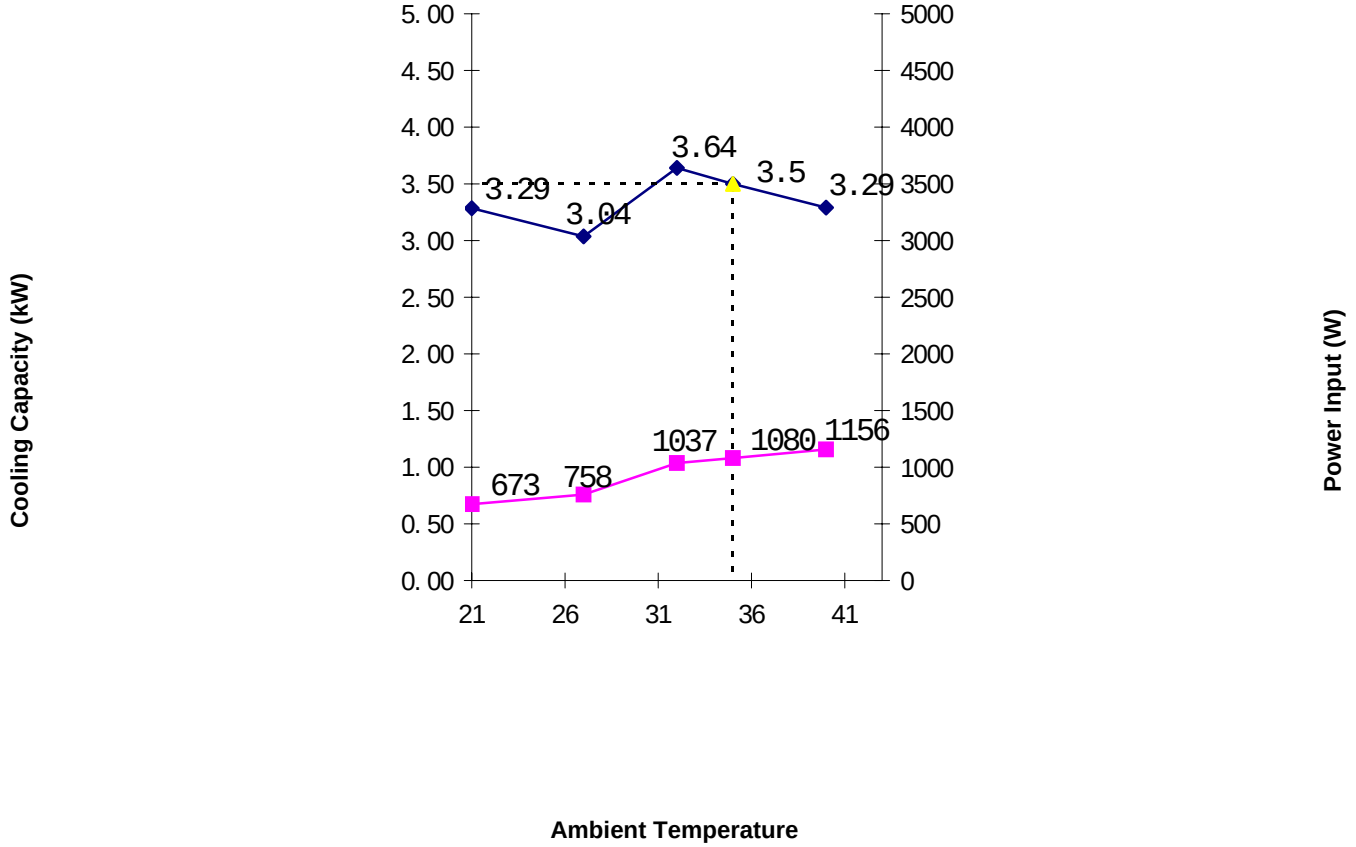

Heating Capacity

Heating Characteristic Curve of RAF/RAC-35NH5

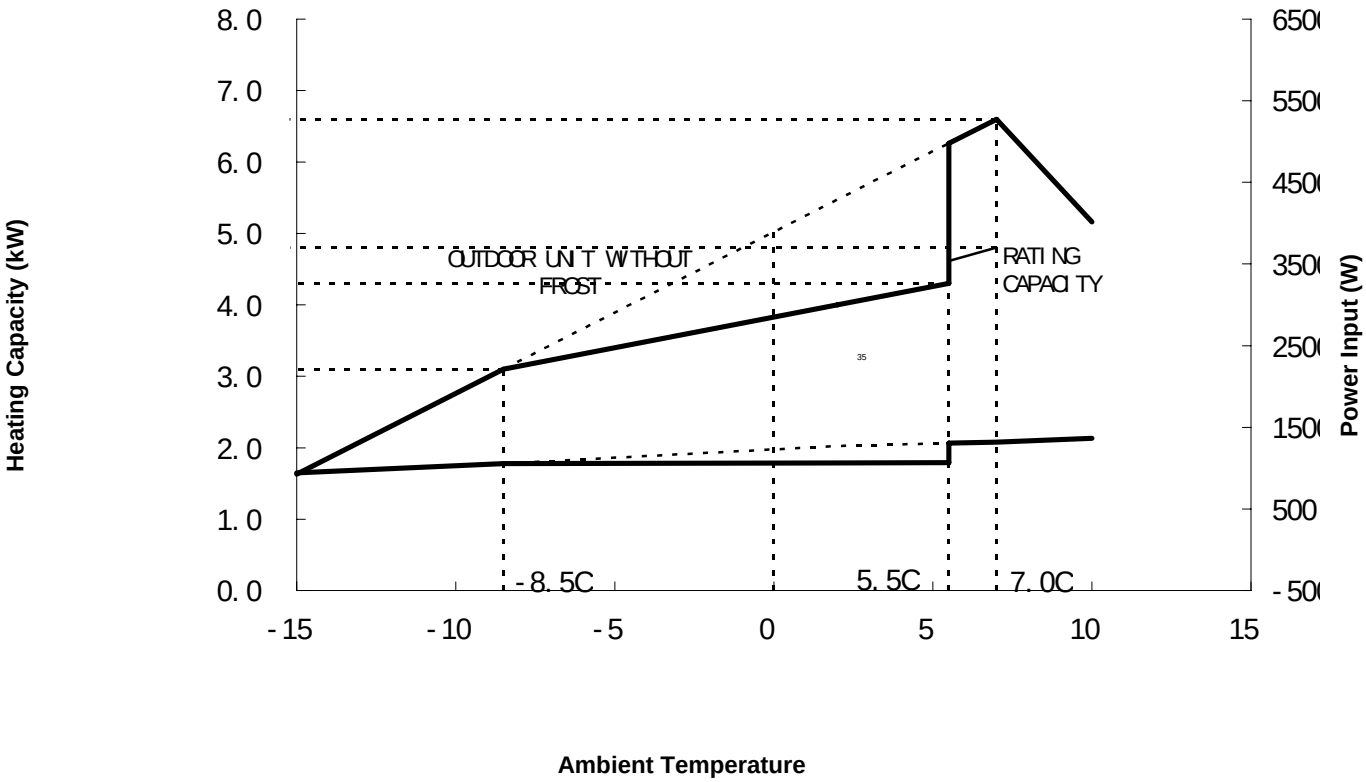

Cooling Capacity

Cooling Characteristic Curve of RAF/RAC-50NH5

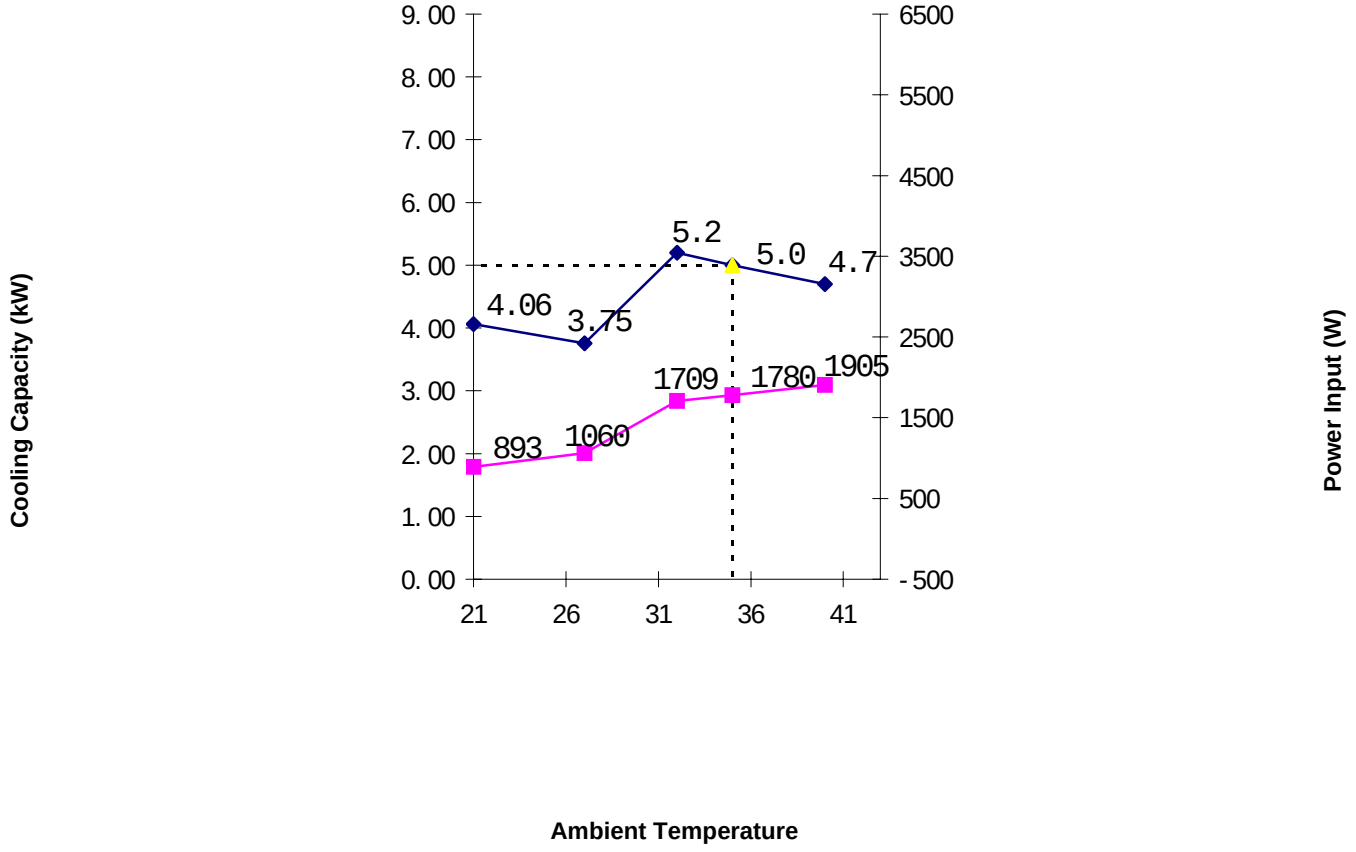

Heating Capacity

Heating Characteristic Curve of RAF/RAC-50NH5

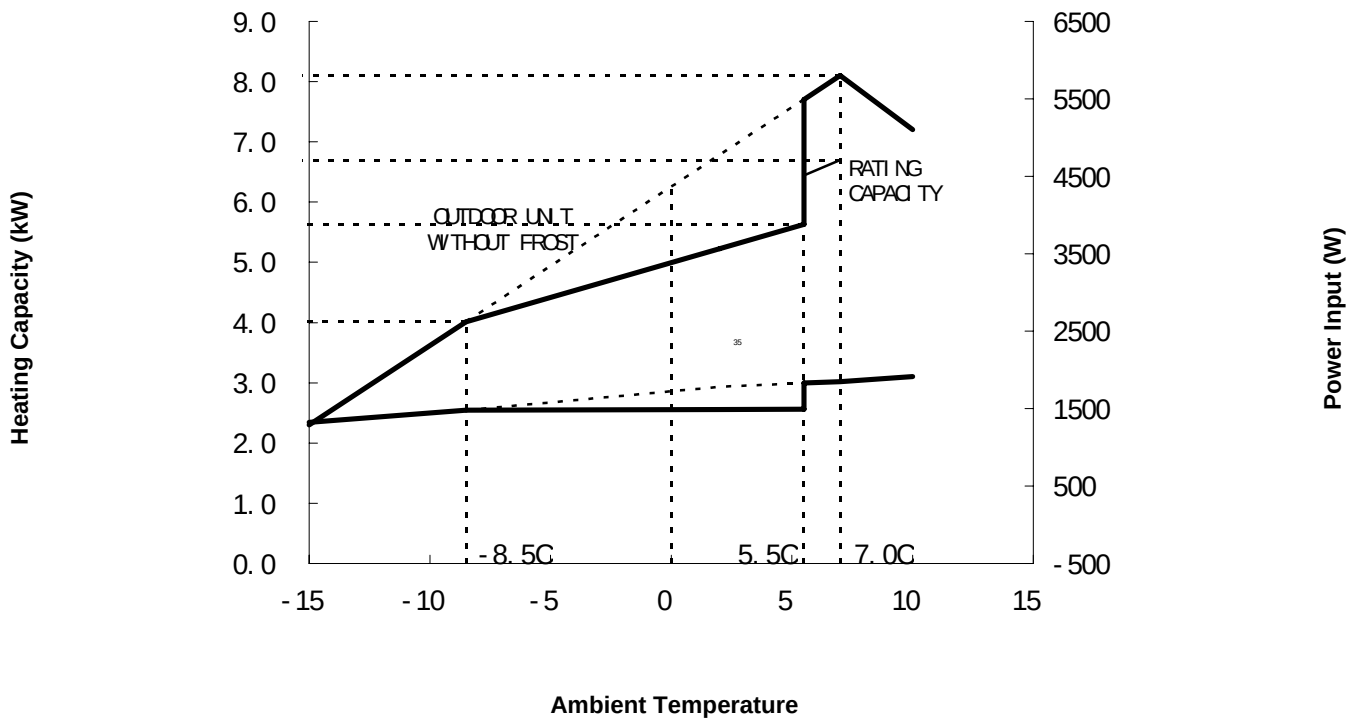

Cooling Capacity

Cooling Characteristic Curve of RAM-40QH5

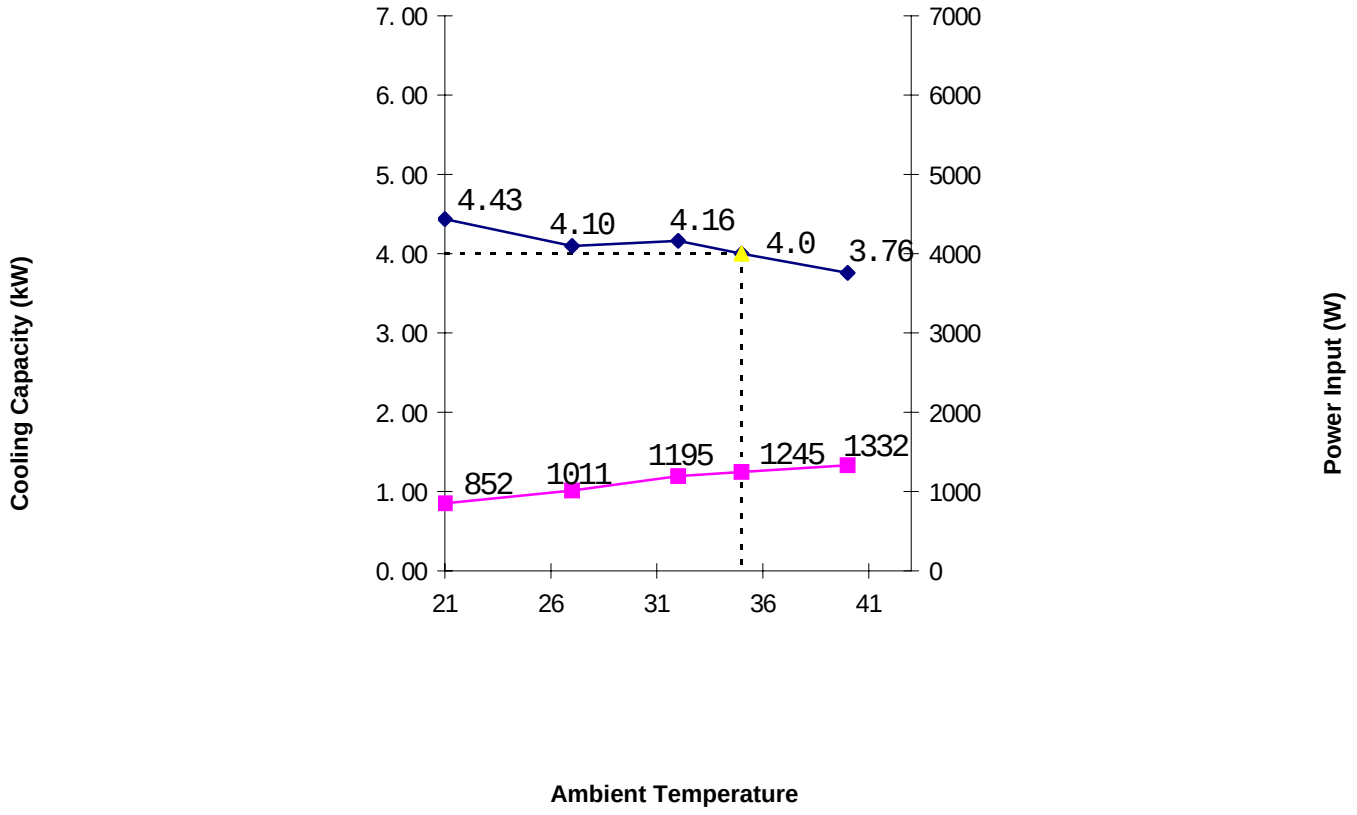

Heating Capacity

Heating Characteristic Curve of RAM-40QH5

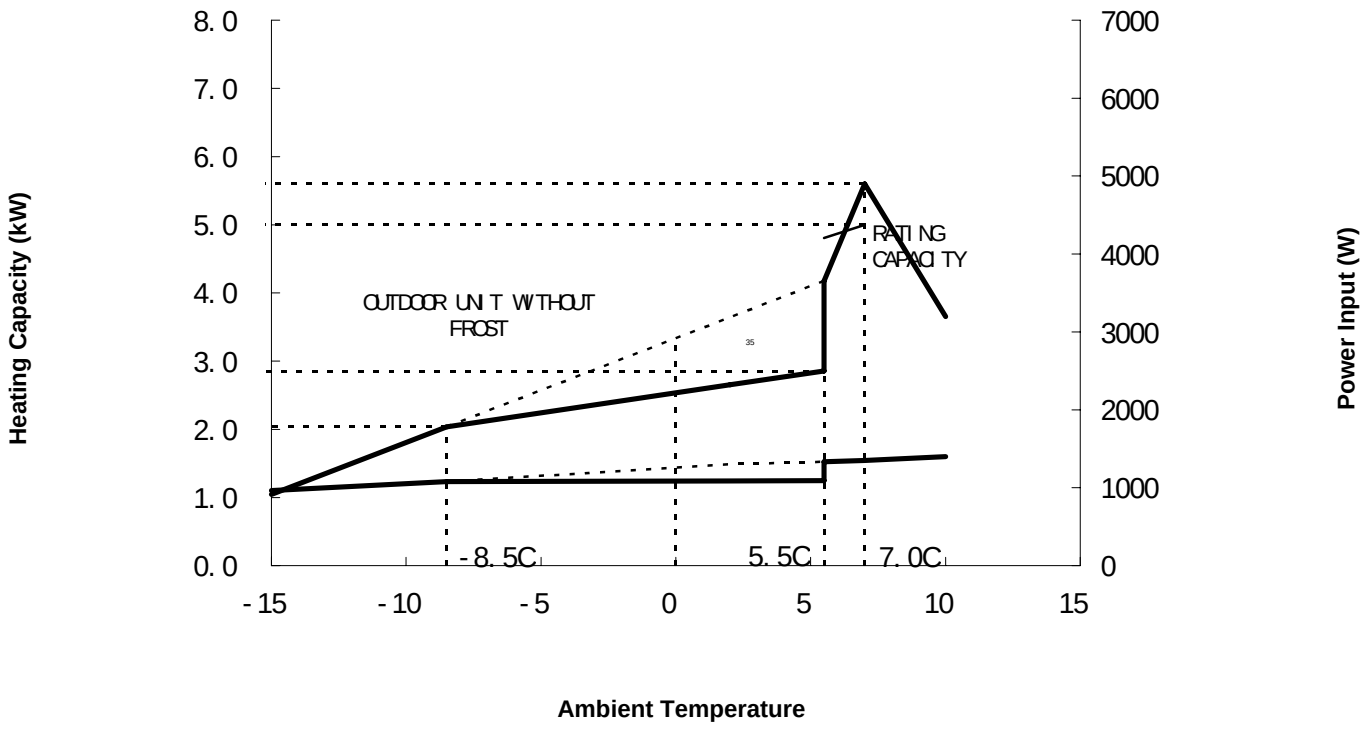

Cooling Capacity

Cooling Characteristic Curve of RAM-55QH5

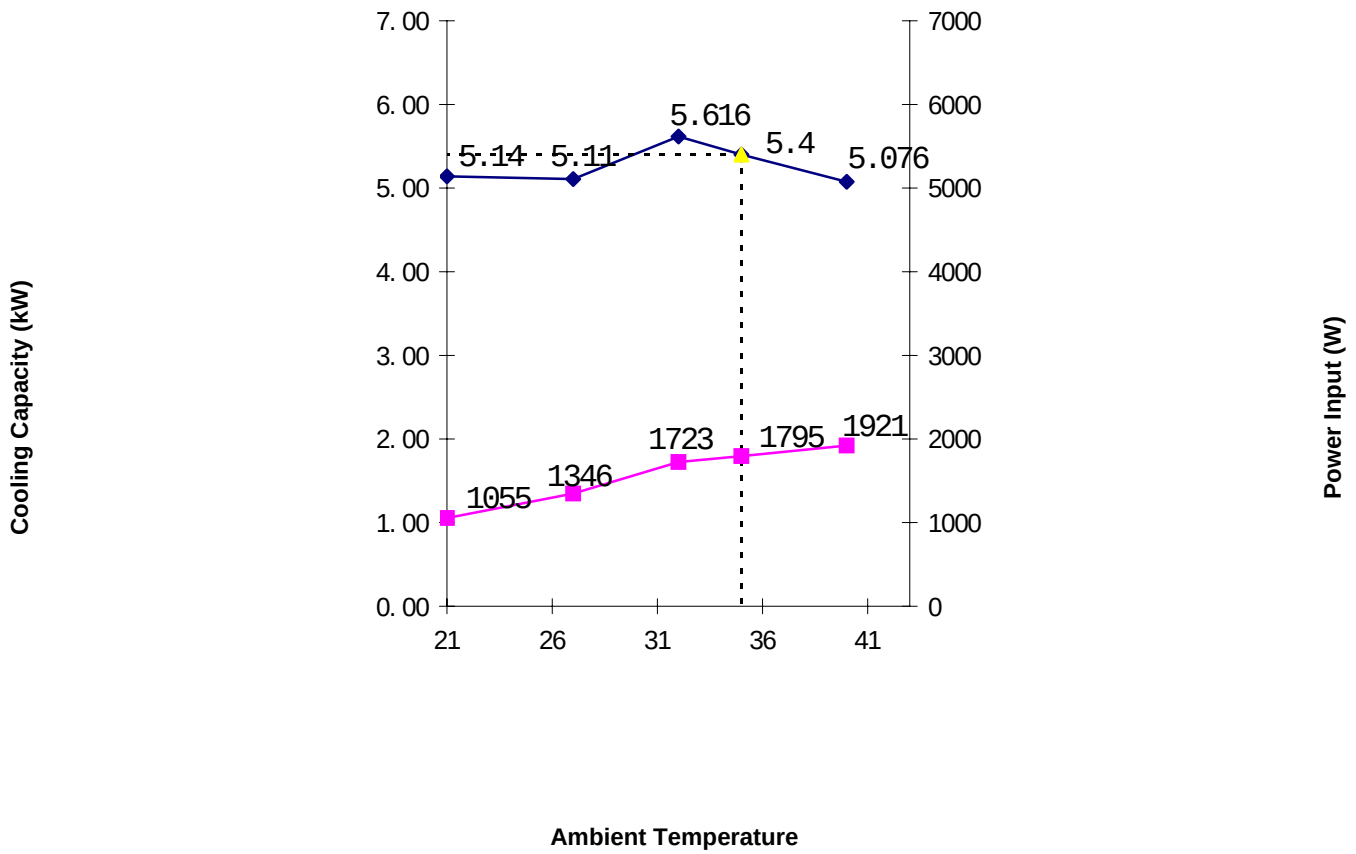

Heating Capacity

Heating Characteristic Curve of RAM-55QH5

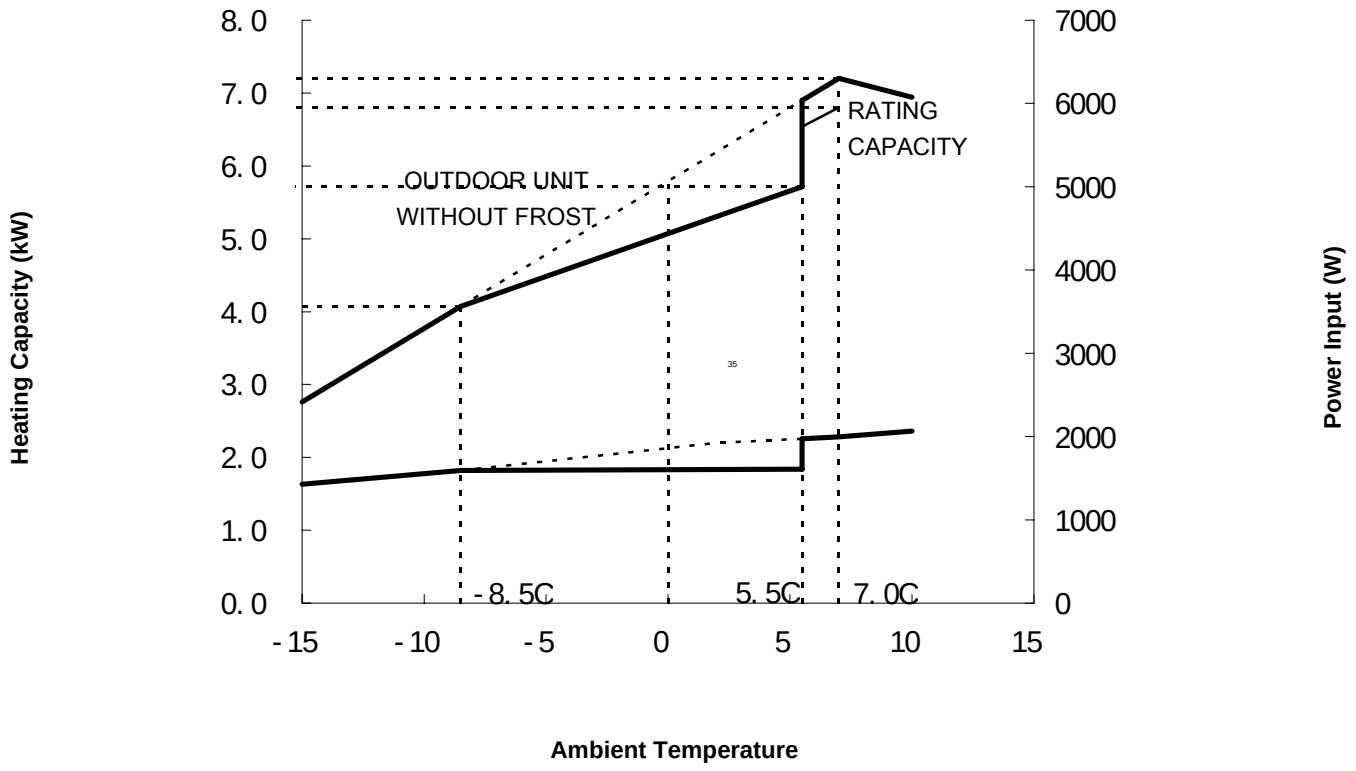

Cooling Capacity

Cooling Characteristic Curve of RAM-65QH5

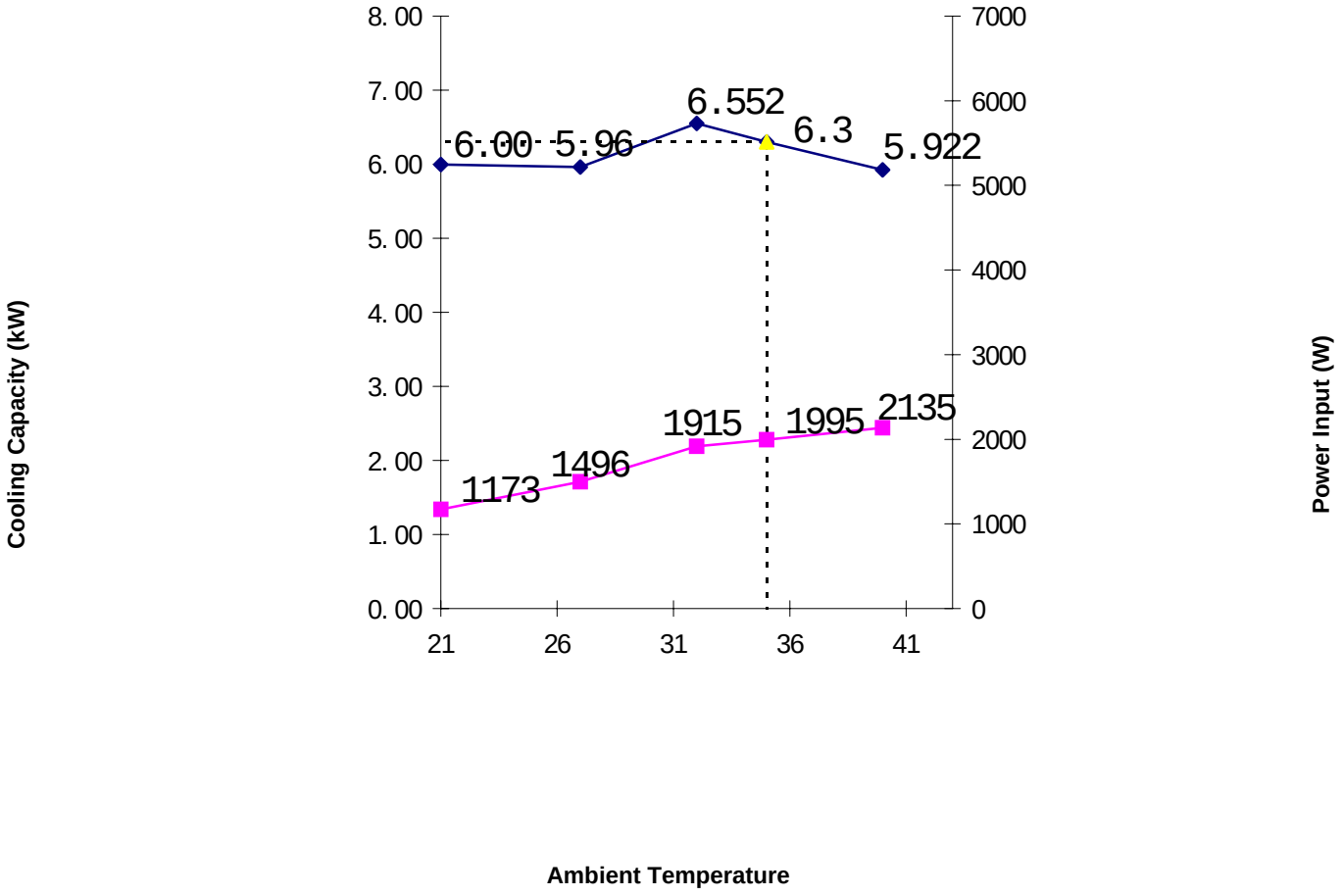

Heating Capacity

Heating Characteristic Curve of RAM-65QH5

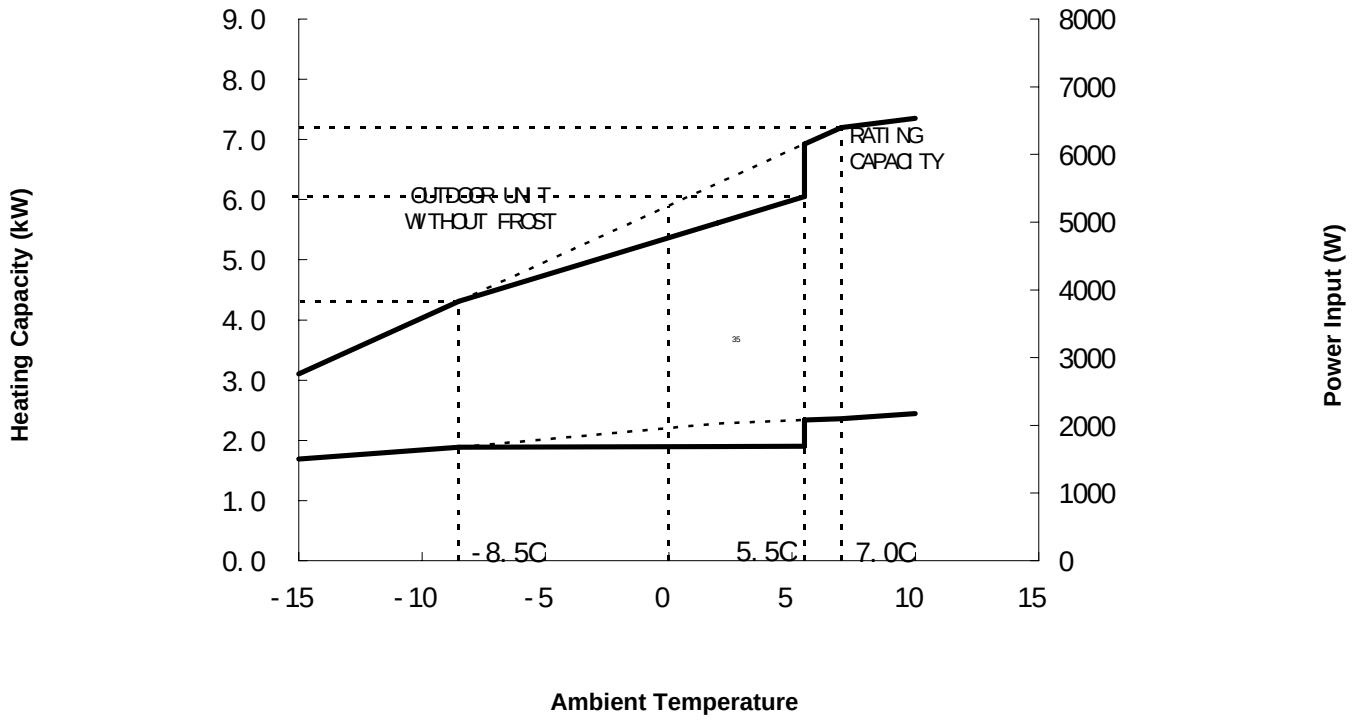

Cooling Capacity

Cooling Characteristic Curve of RAM-72QH5

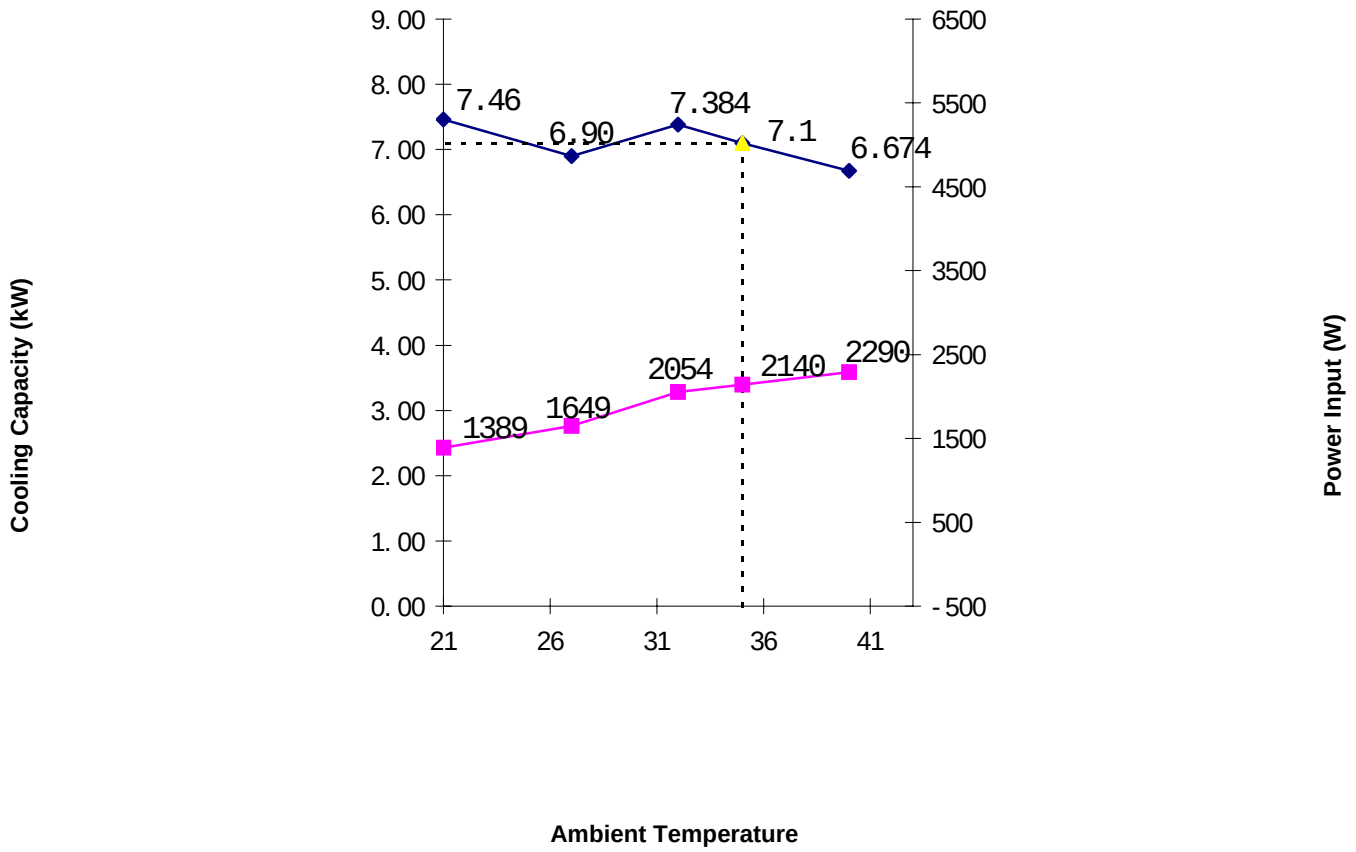

Heating Capacity

Heating Characteristic Curve of RAM-72QH5

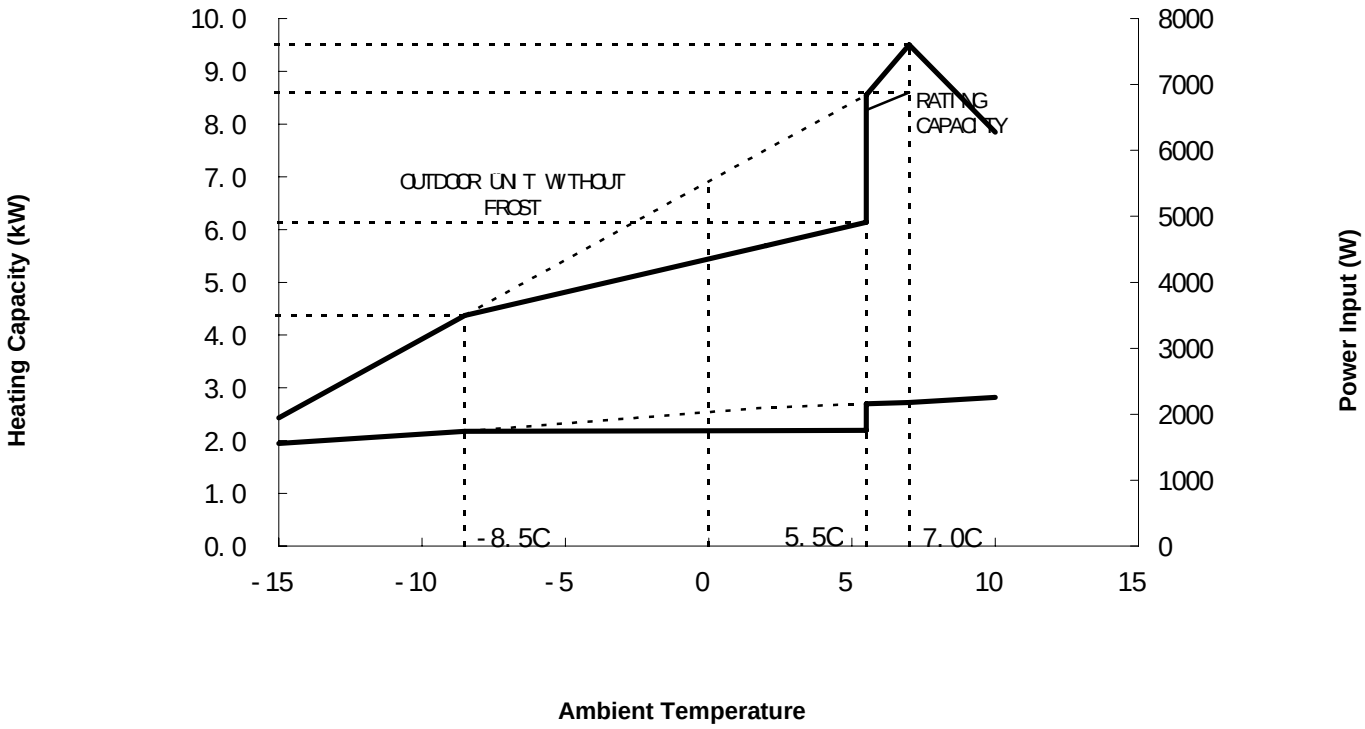

Cooling Capacity

Cooling Characteristic Curve of RAM-80QH5

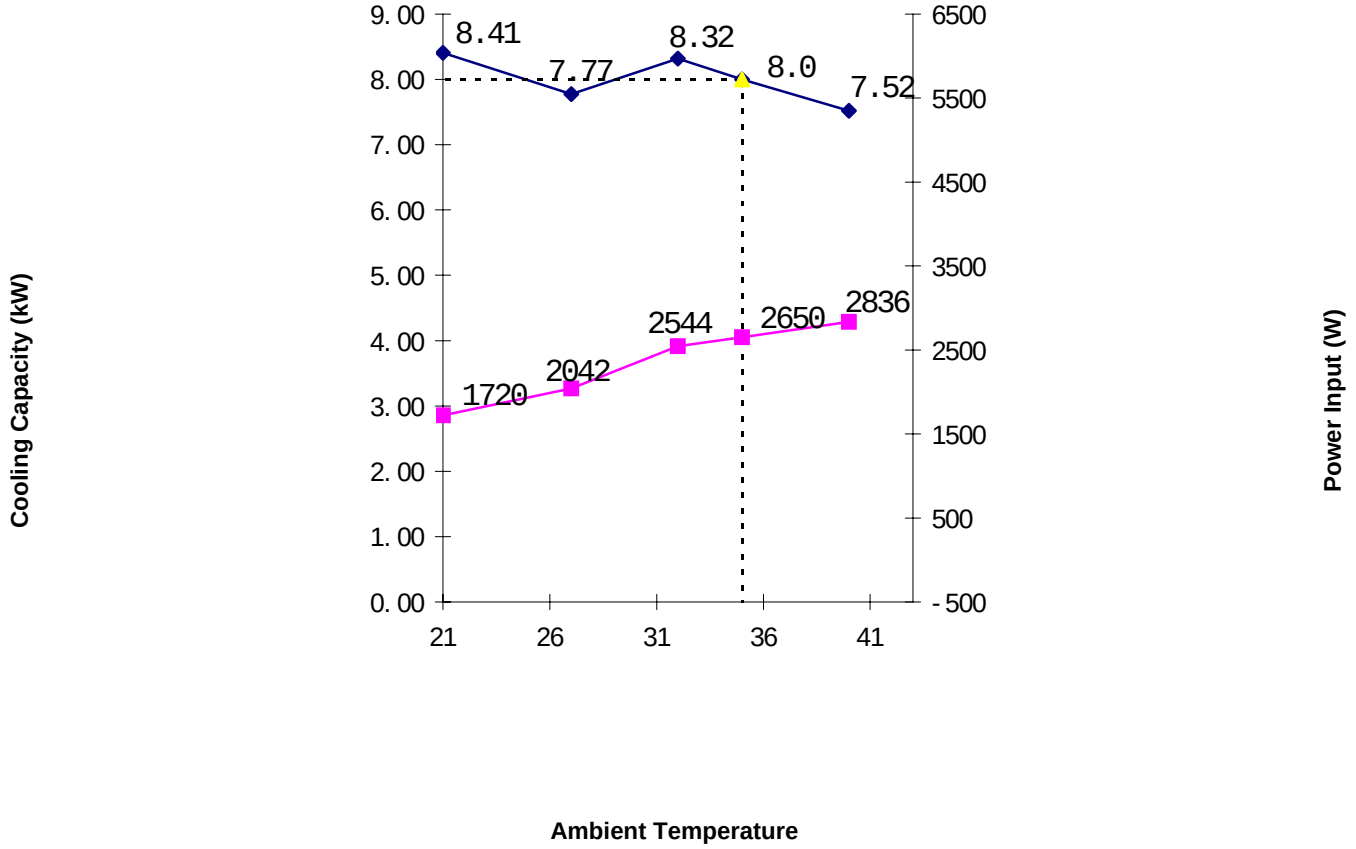

Heating Capacity

Heating Characteristic Curve of RAM-80QH5

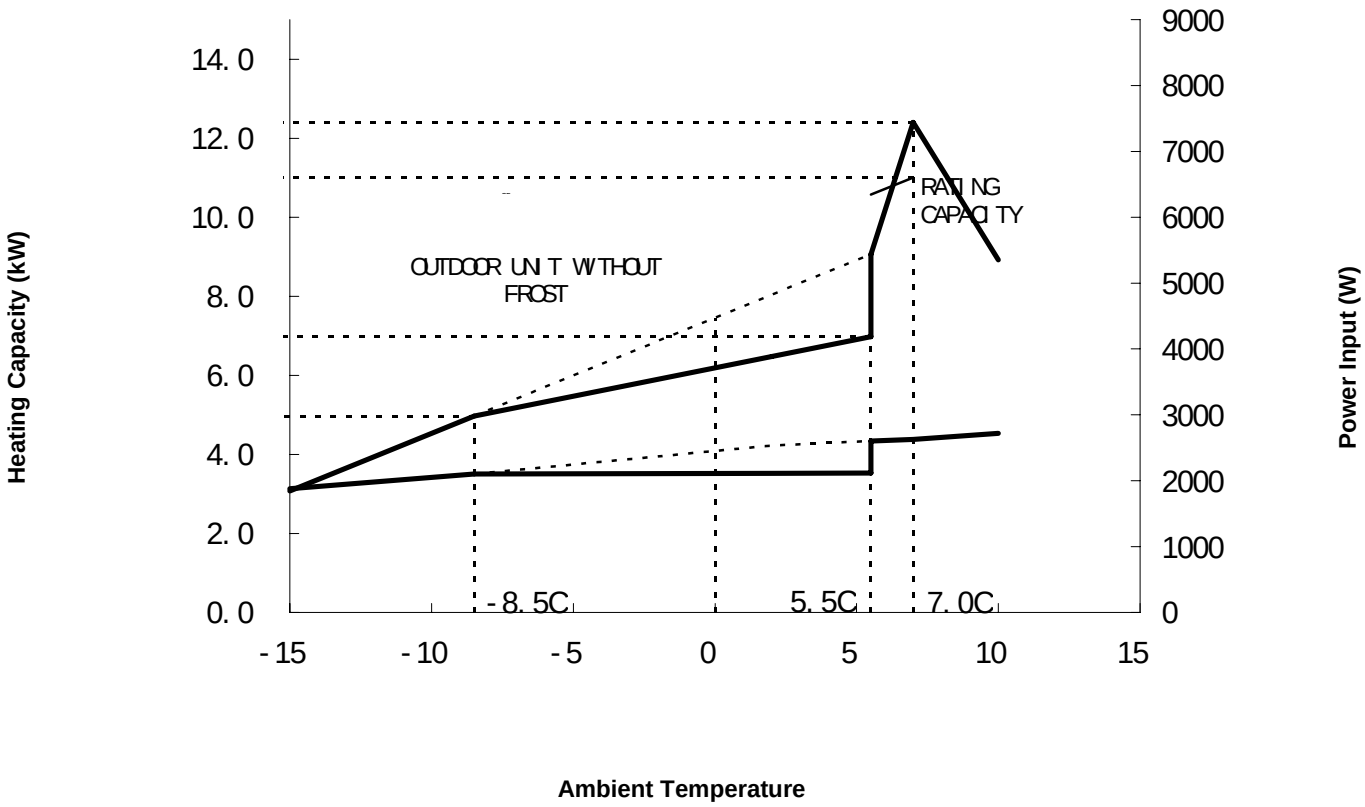

Cooling Capacity

Cooling Characteristic Curve of RAS/RAC-18YH5

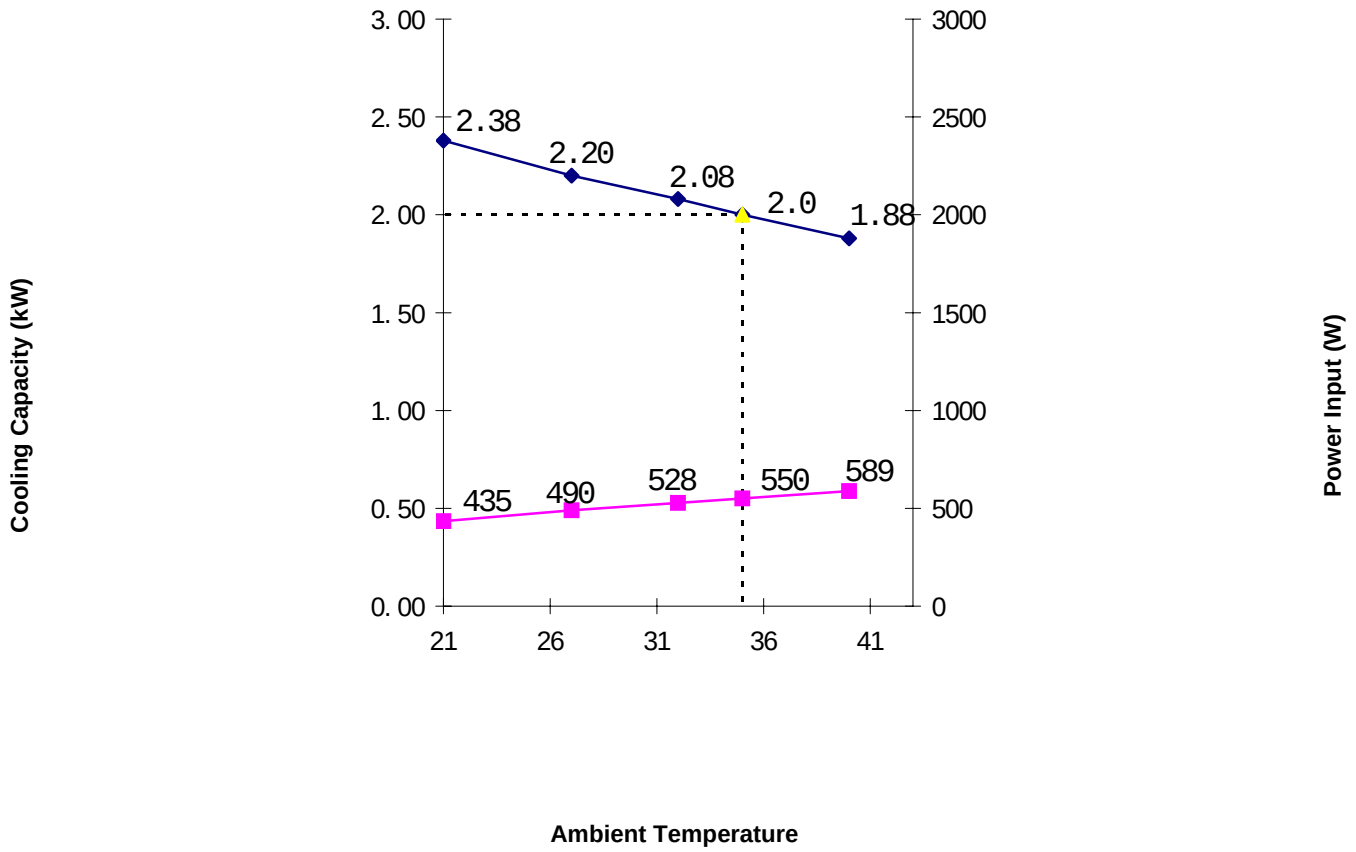

Heating Capacity

Heating Characteristic Curve of RAS/RAC-18YH5

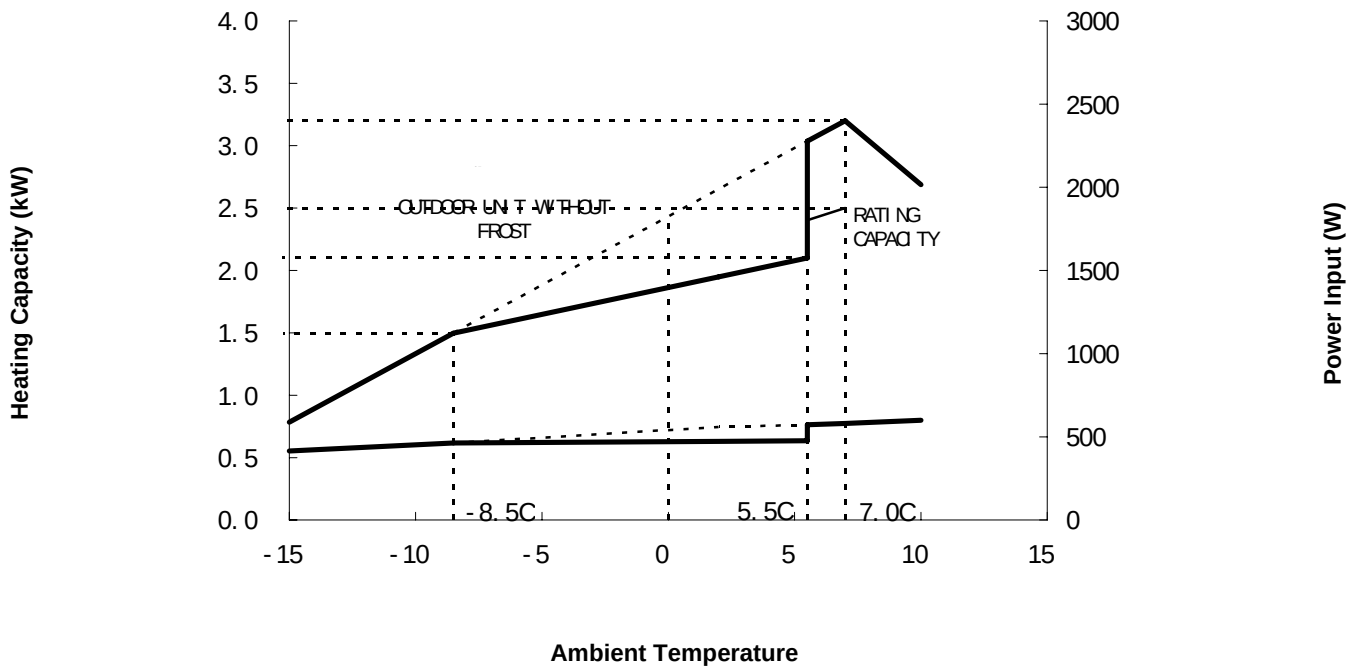

Cooling Capacity

Cooling Characteristic Curve of RAS/RAC-25YH5

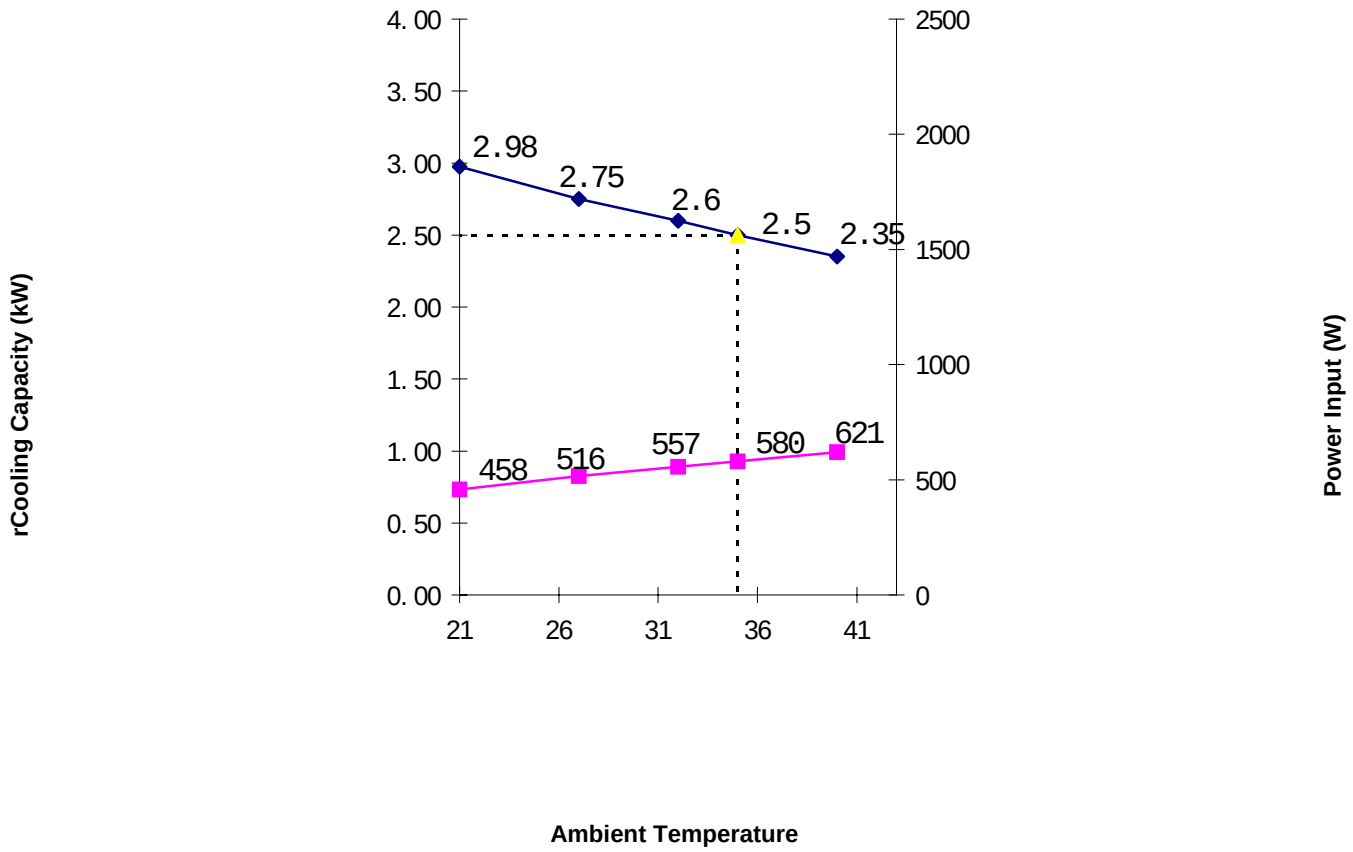

Heating Capacity

Heating Characteristic Curve of RAS/RAC-25YH5

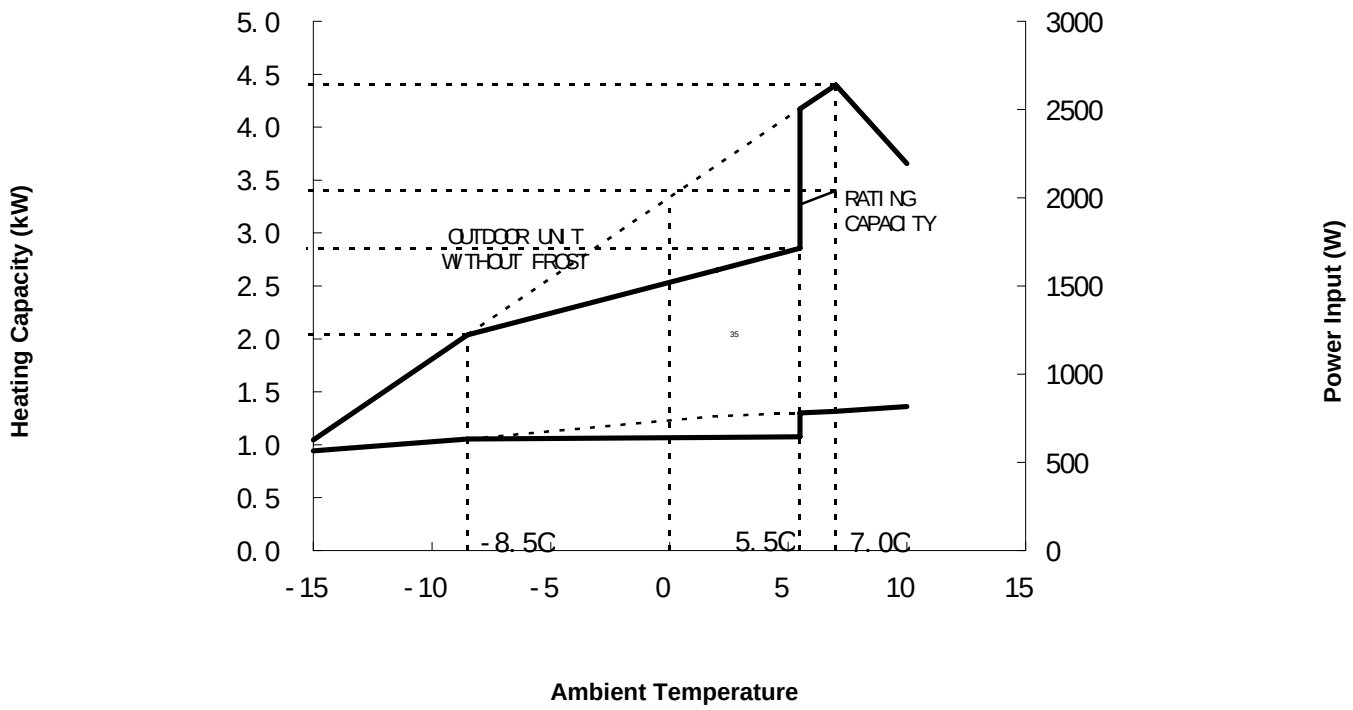

Cooling Capacity

Cooling Characteristic Curve of RAS/RAC-35YH5

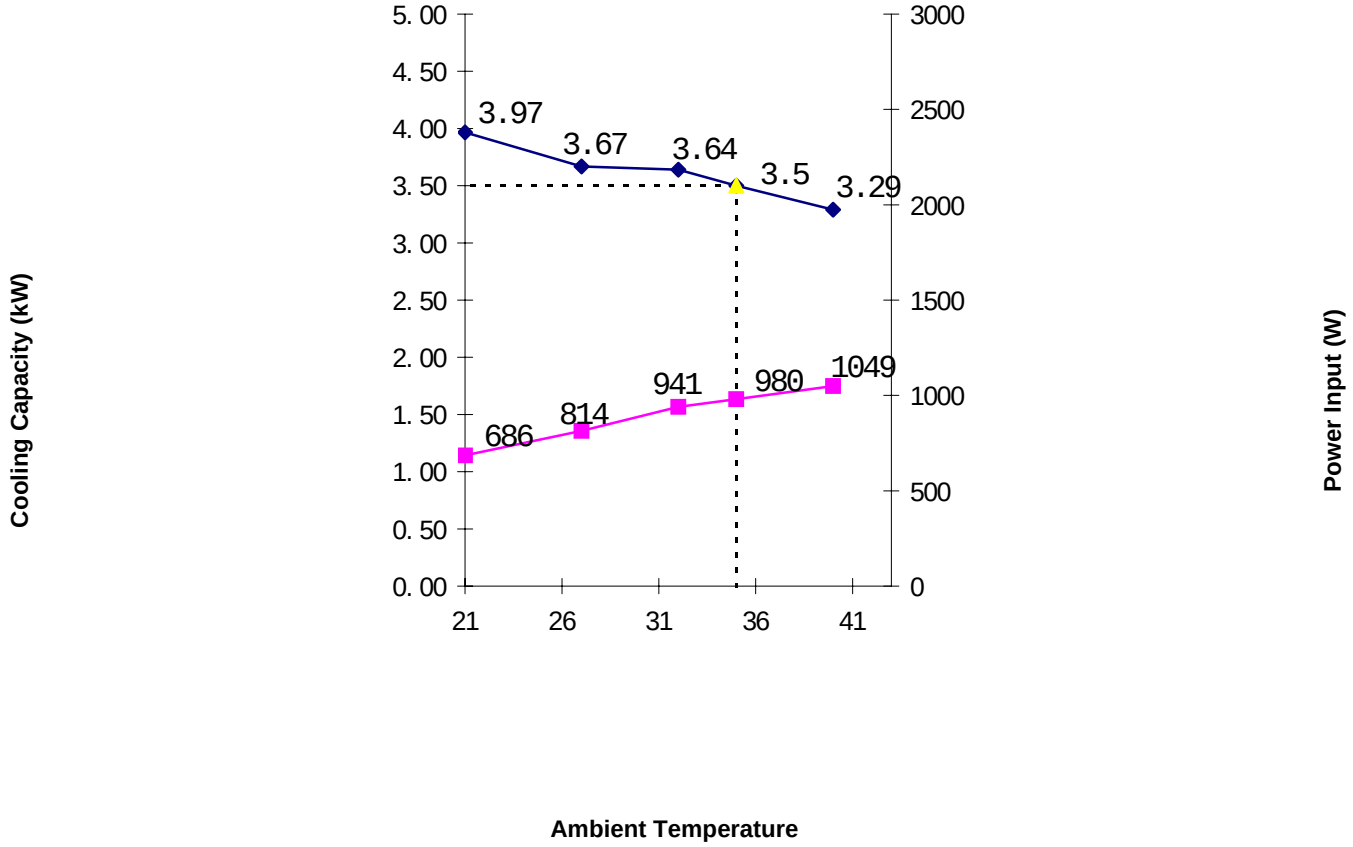

Heating Capacity

Heating Characteristic Curve of RAS/RAC-35YH5

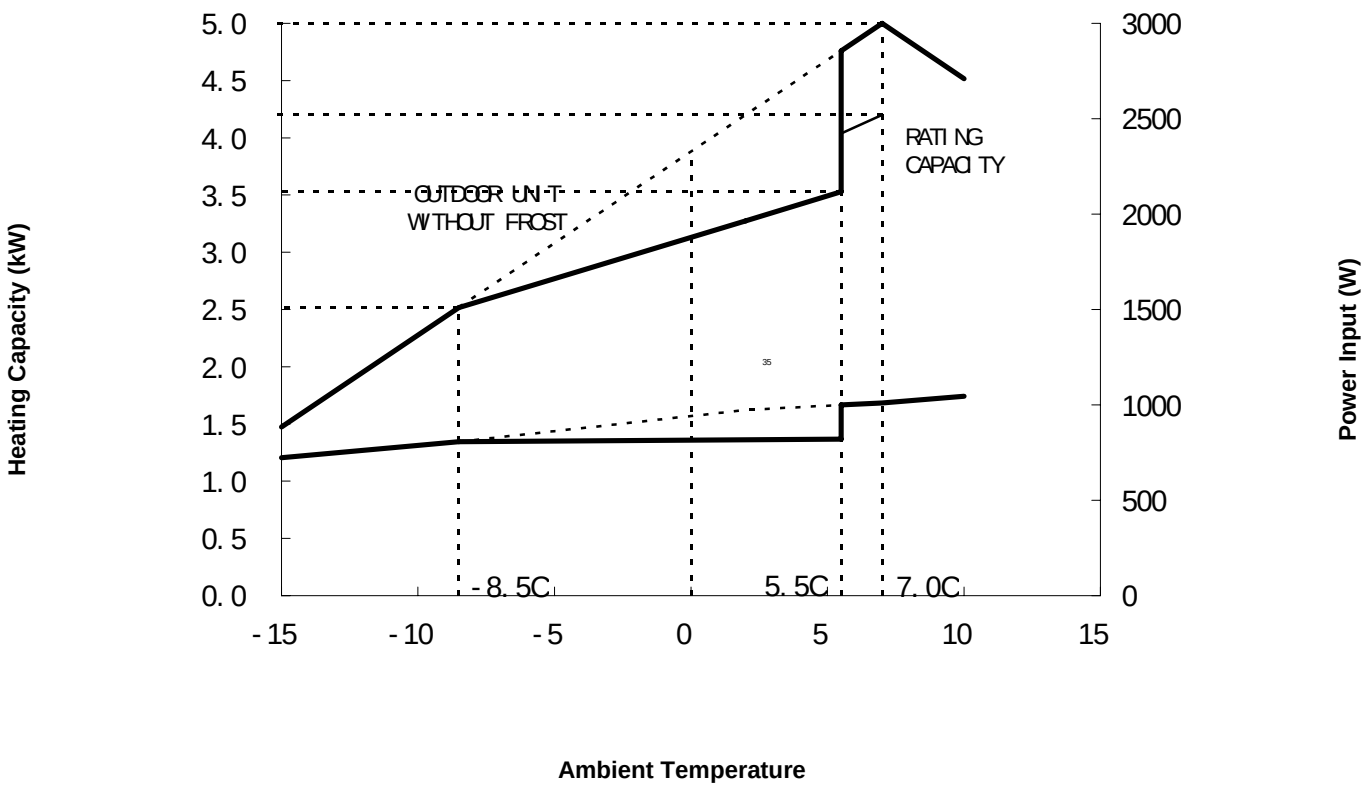

Cooling Capacity

Cooling Characteristic Curve of RAS/RAC-50YH5

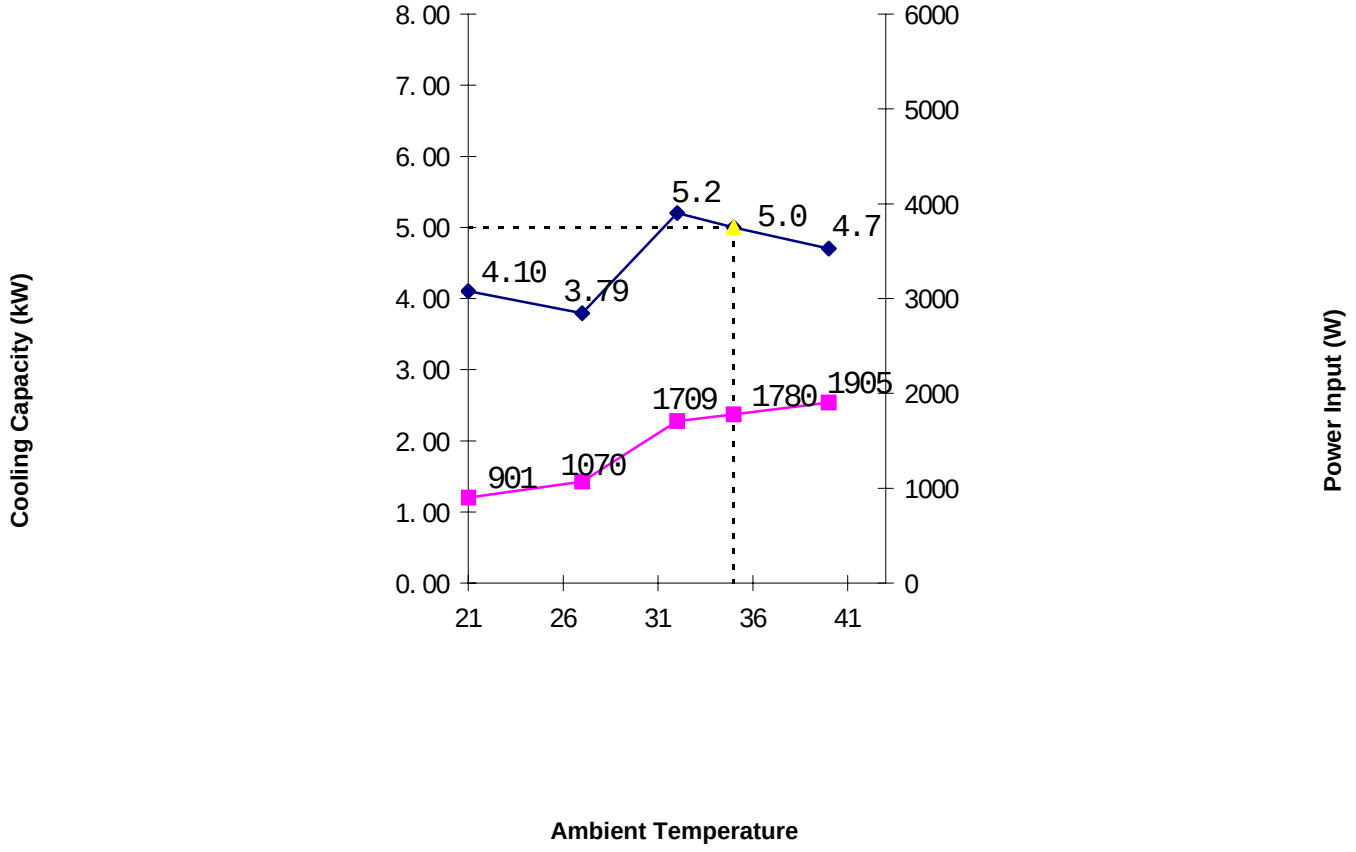

Heating Capacity

Heating Characteristic Curve of RAS/RAC-50YH5

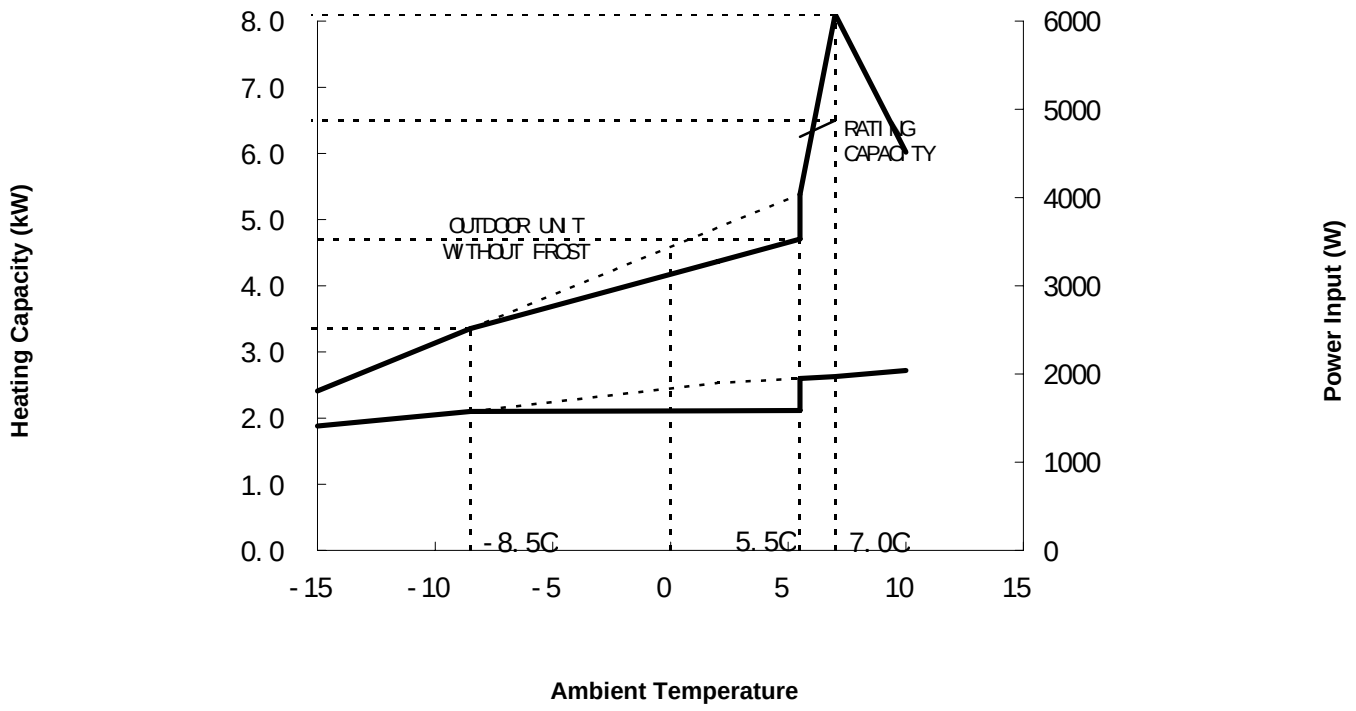

Cooling Capacity

Cooling Characteristic Curve of RAS/RAC-60YH5

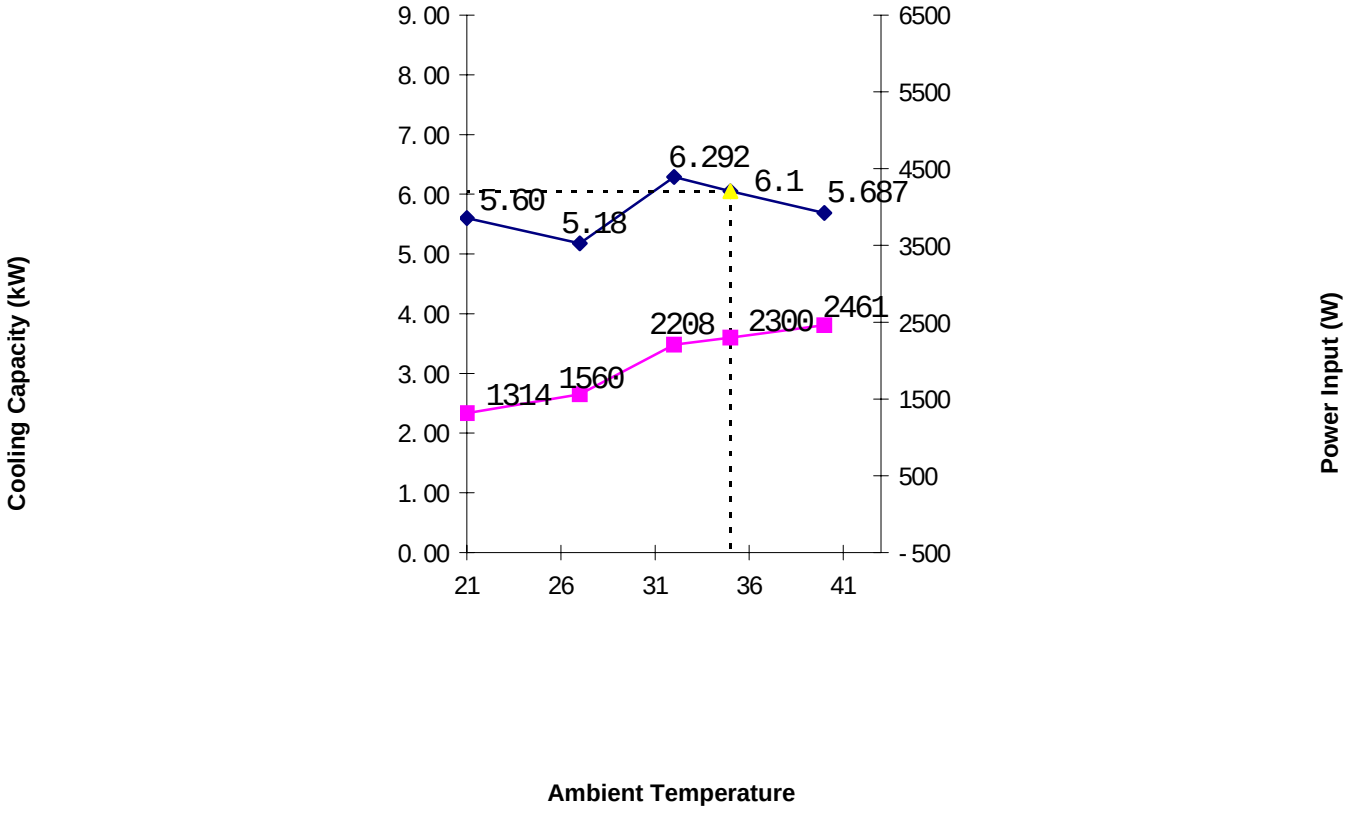

Heating Capacity

Heating Characteristic Curve of RAS/RAC-60YH5

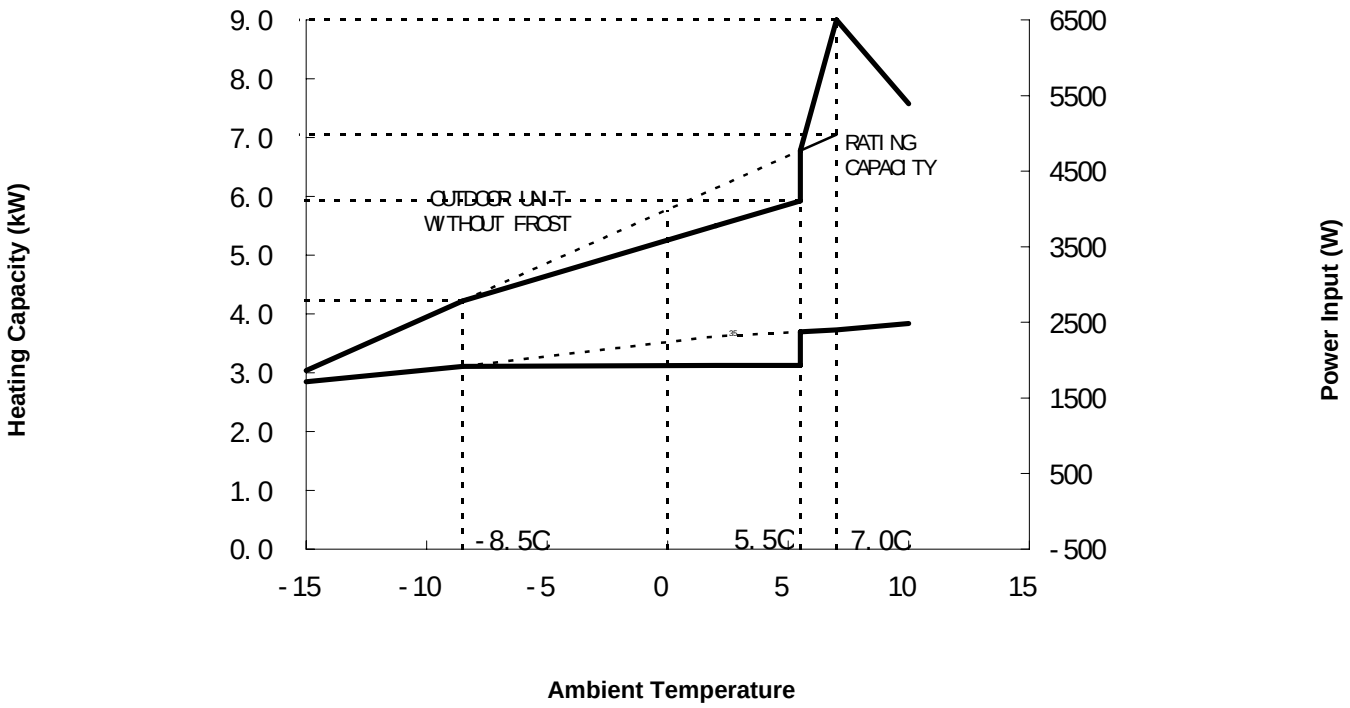

Cooling Capacity

Cooling Characteristic Curve of RAC-70YH5

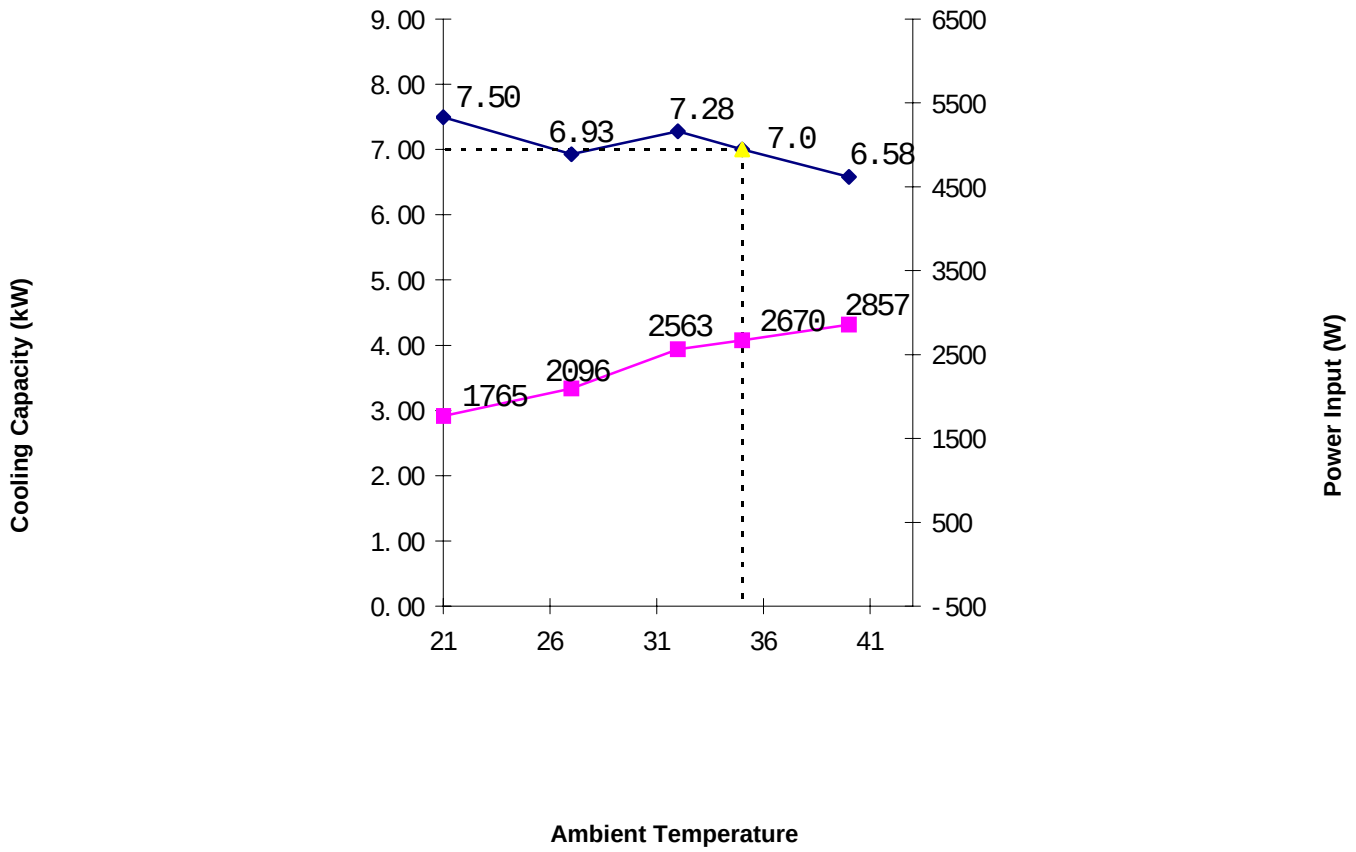

Heating Capacity

Heating Characteristic Curve of RAC-70YH5

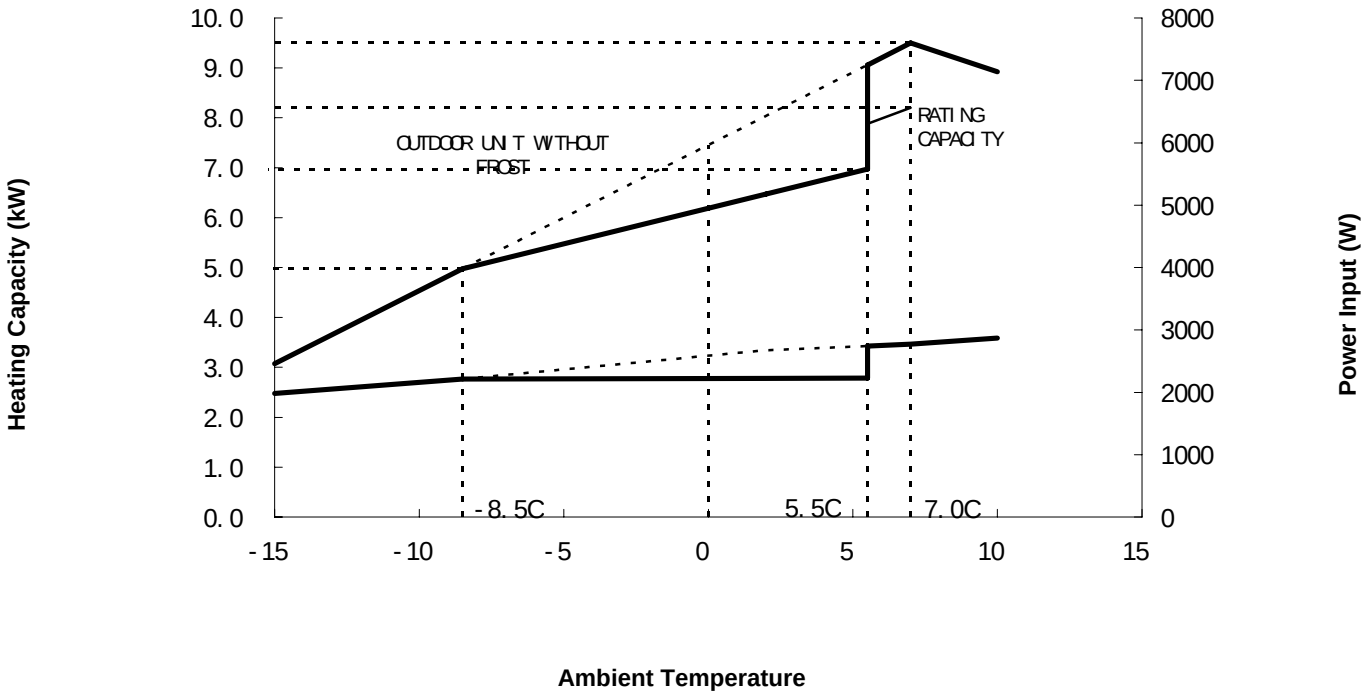

Cooling Capacity

Cooling Characteristic Curve of RAS/RAC-80YH5

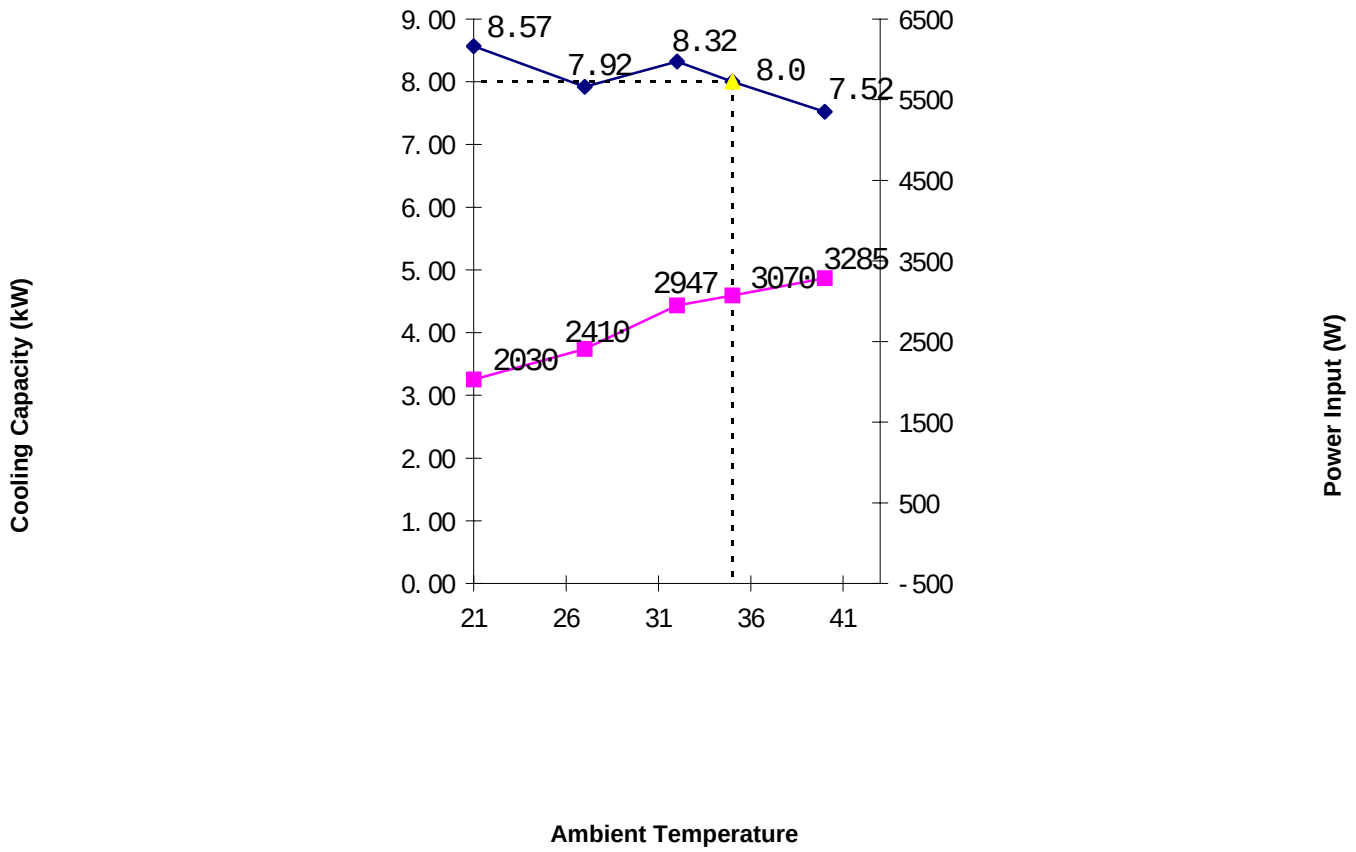

Heating Capacity

Heating Characteristic Curve of RAS/RAC-80YH5

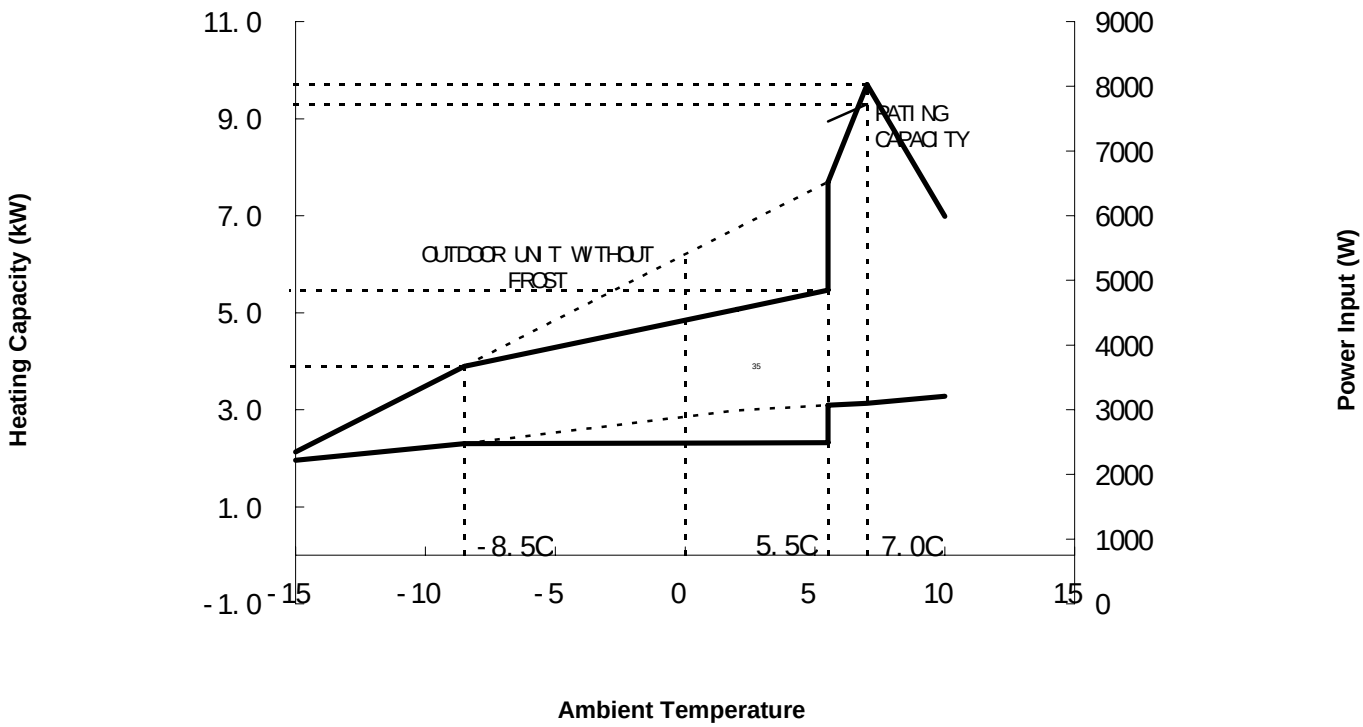

Cooling Capacity

Cooling Characteristic Curve of RAC-07G4, RAC-07GH4

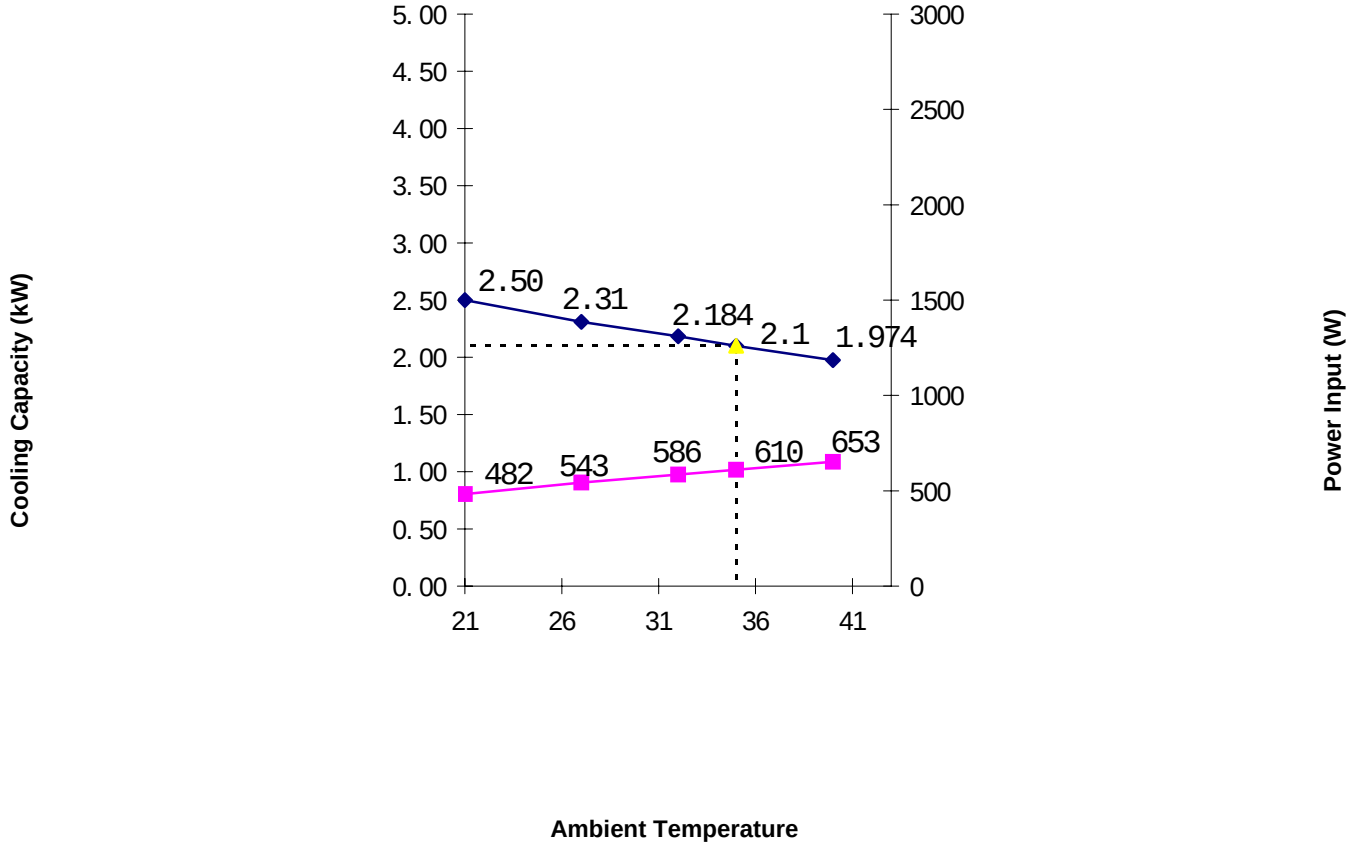

Heating Capacity

Heating Characteristic Curve of RAC-07GH4

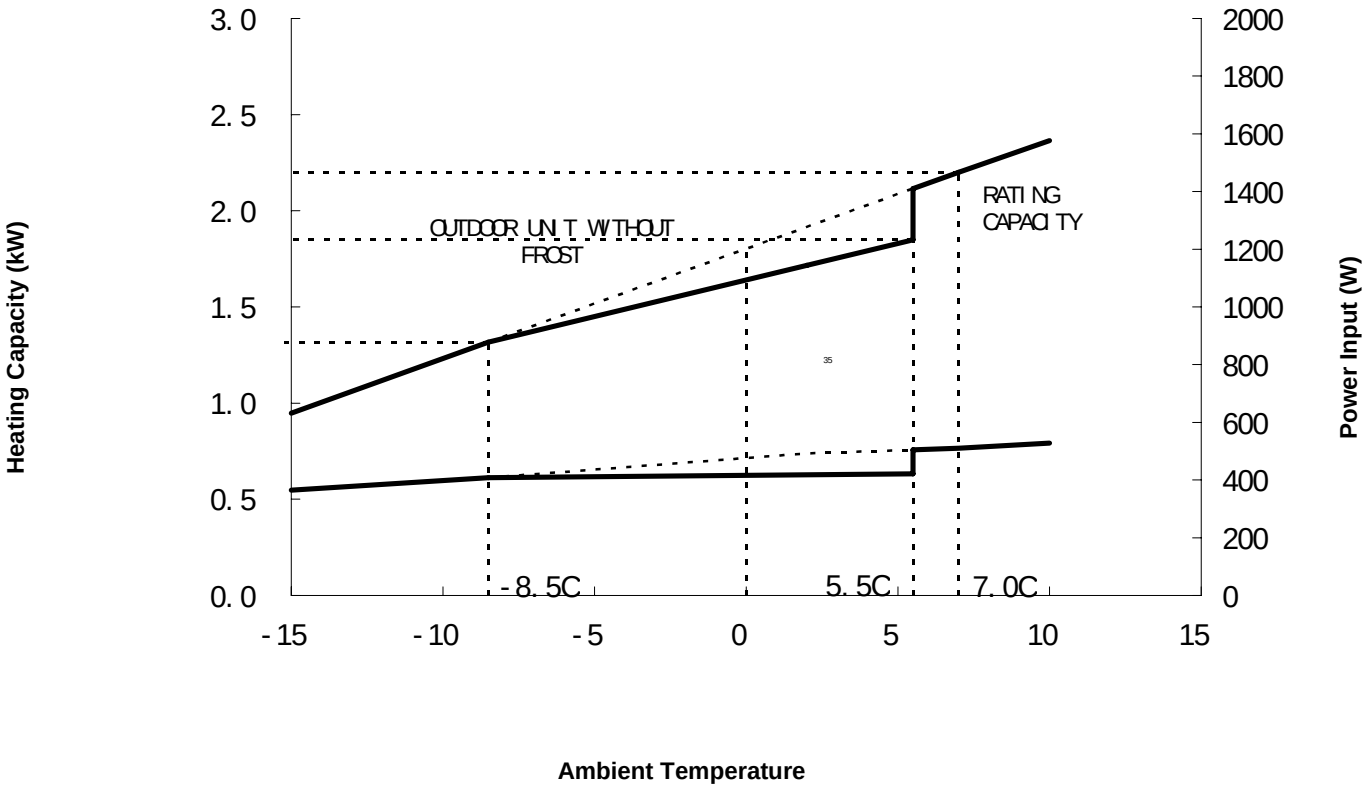

Cooling Capacity

Cooling Characteristic Curve of RAC-09G4, RAC-09GH4

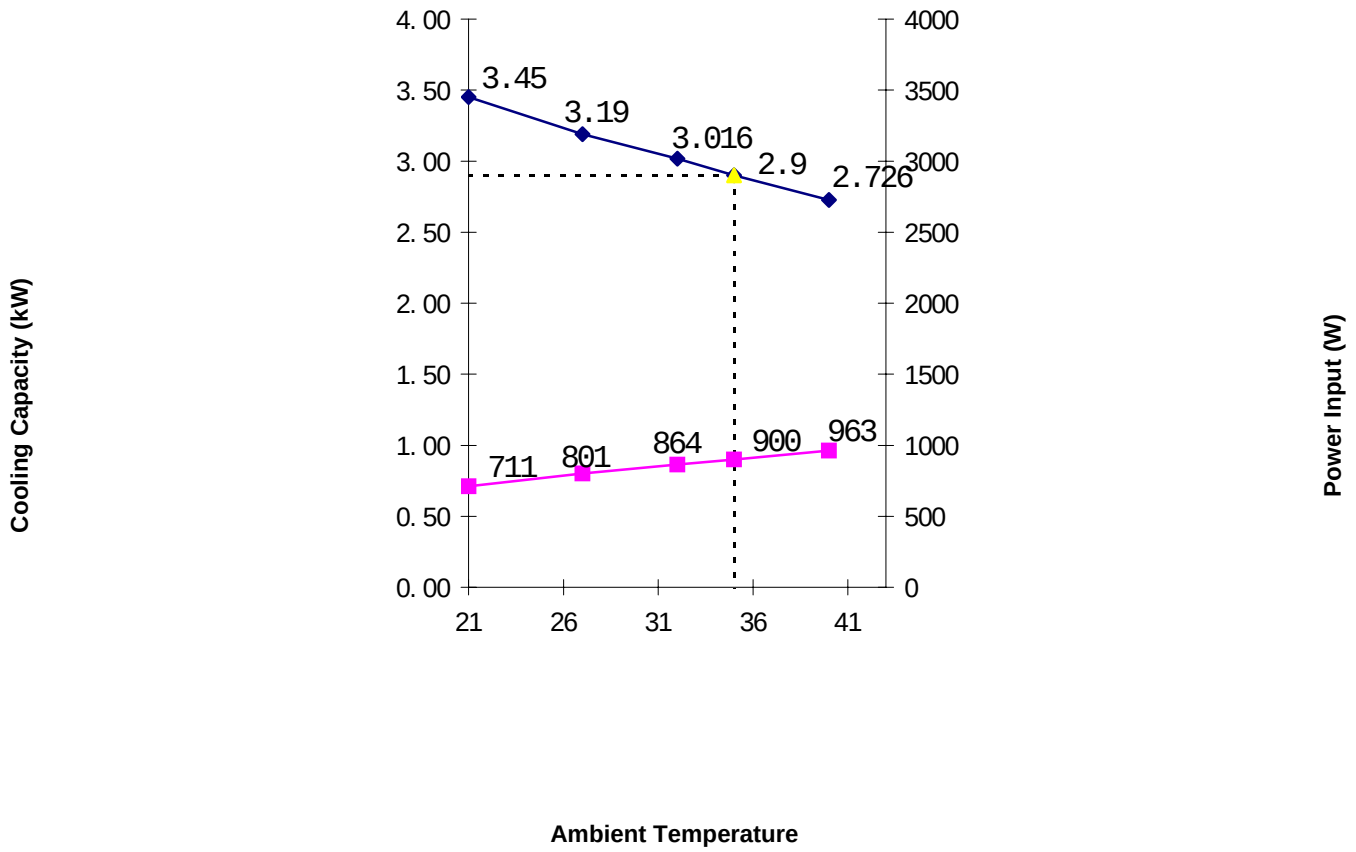

Heating Capacity

Heating Characteristic Curve of RAC-09GH4

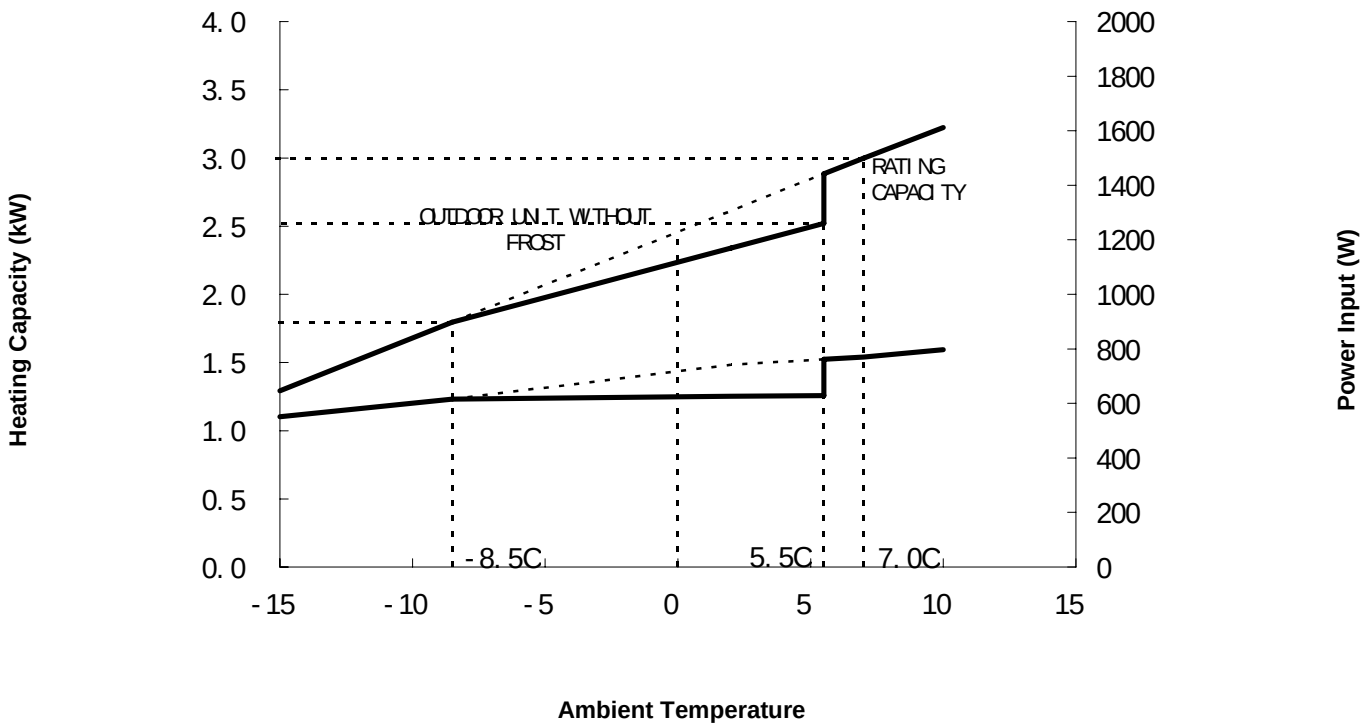

Cooling Capacity

Cooling Characteristic Curve of RAC-14G4/RAC-14GH4

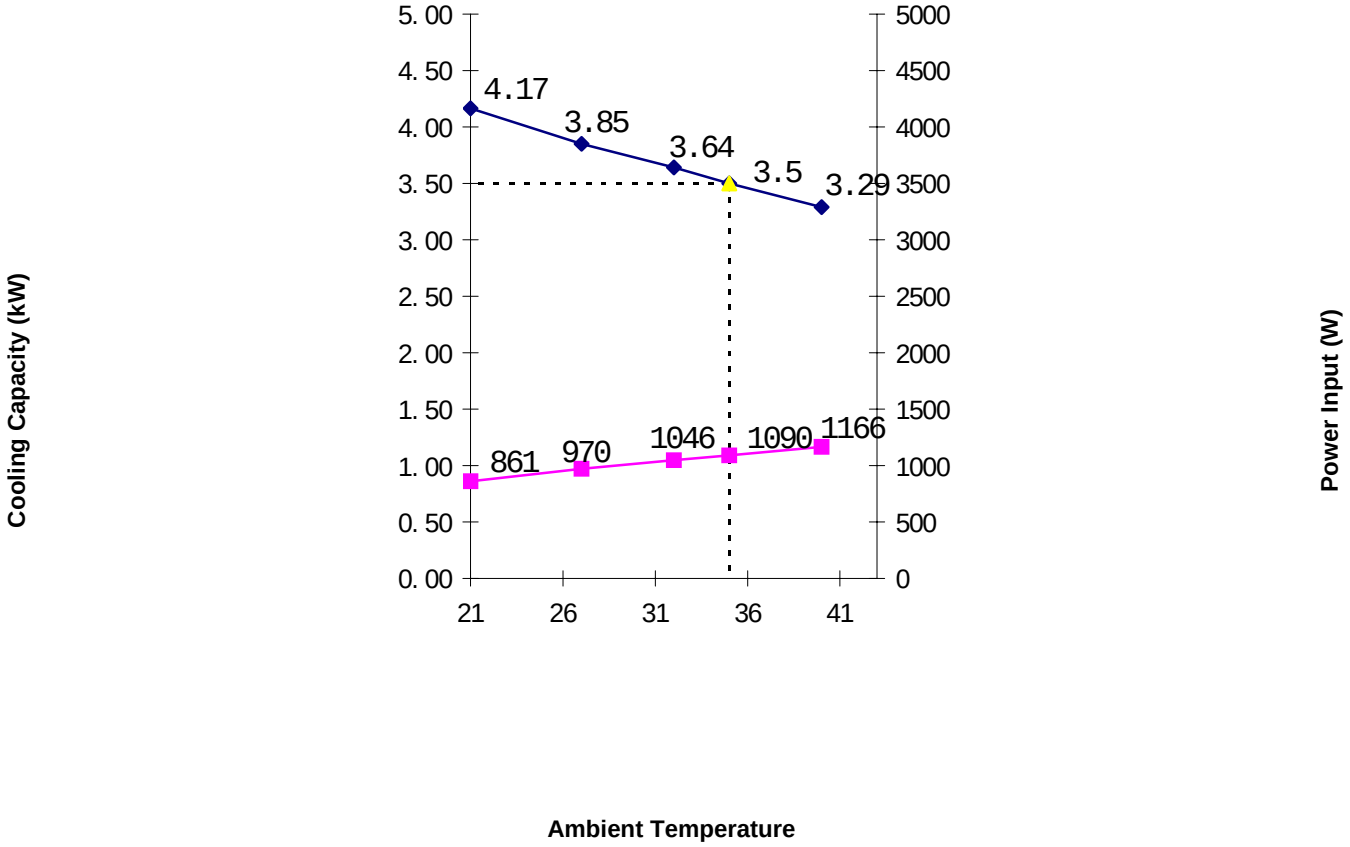

Heating Capacity

Heating Characteristic Curve of RAC-14GH4

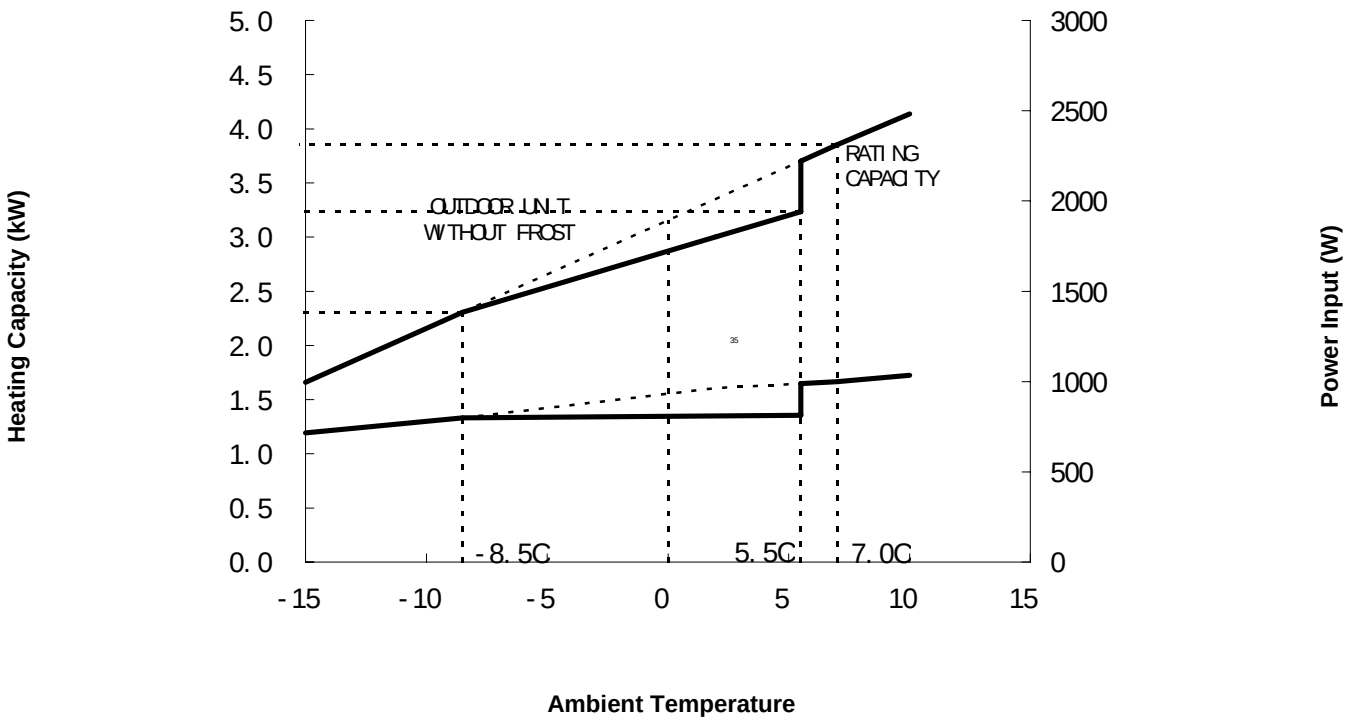

Cooling Capacity

Cooling Characteristic Curve of RAC-184/RAC-18GH4

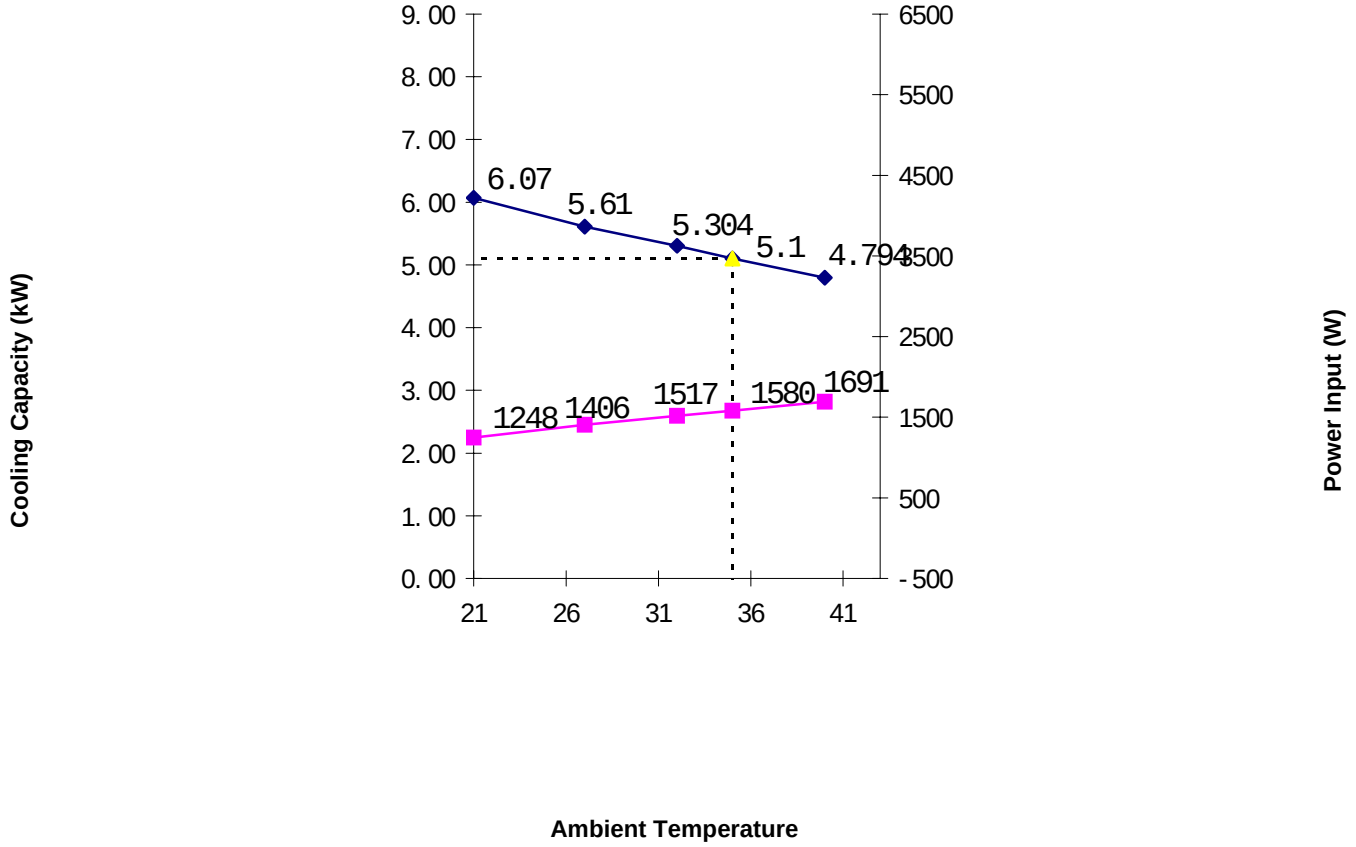

Heating Capacity

Heating Characteristic Curve of RAC-18GH4

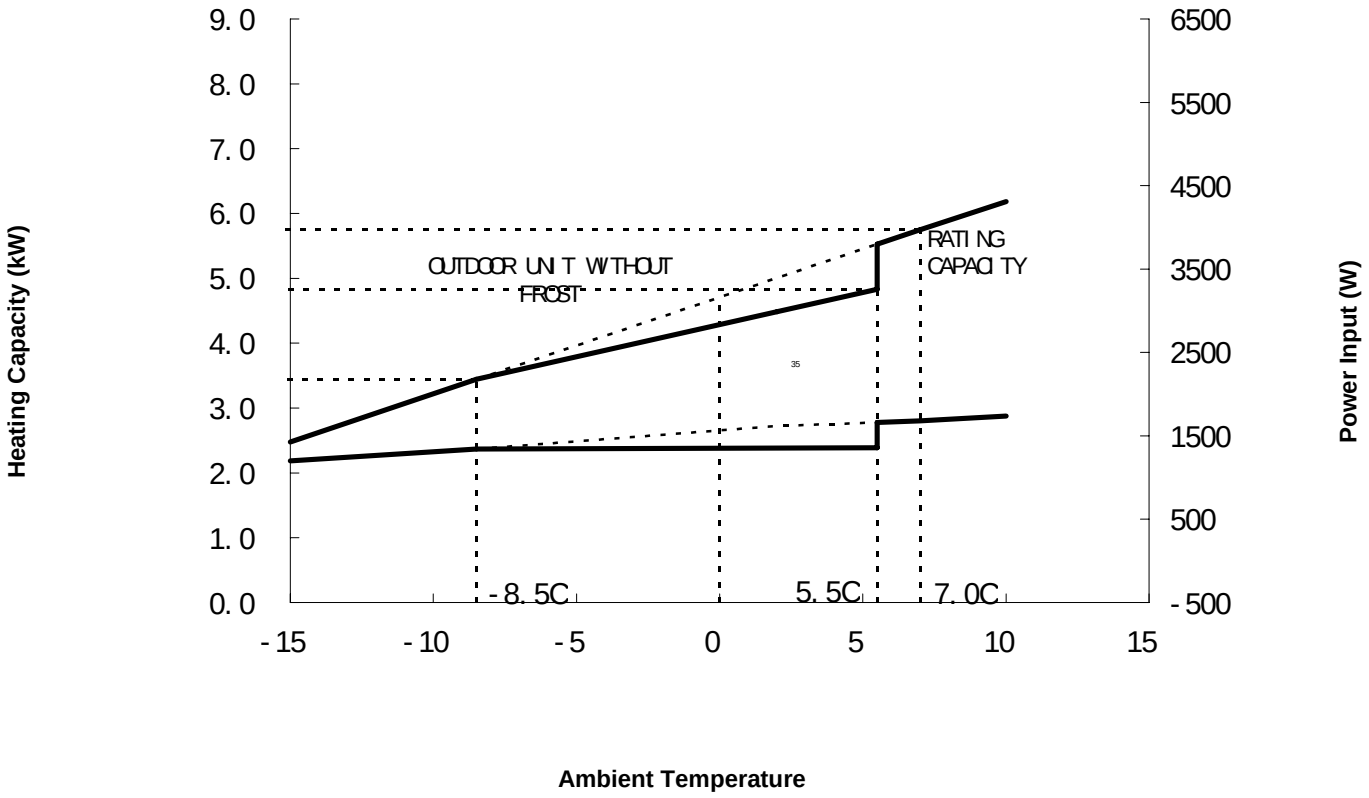

Cooling Capacity

Cooling Characteristic Curve of RAC-24G4/RAC-24GH4

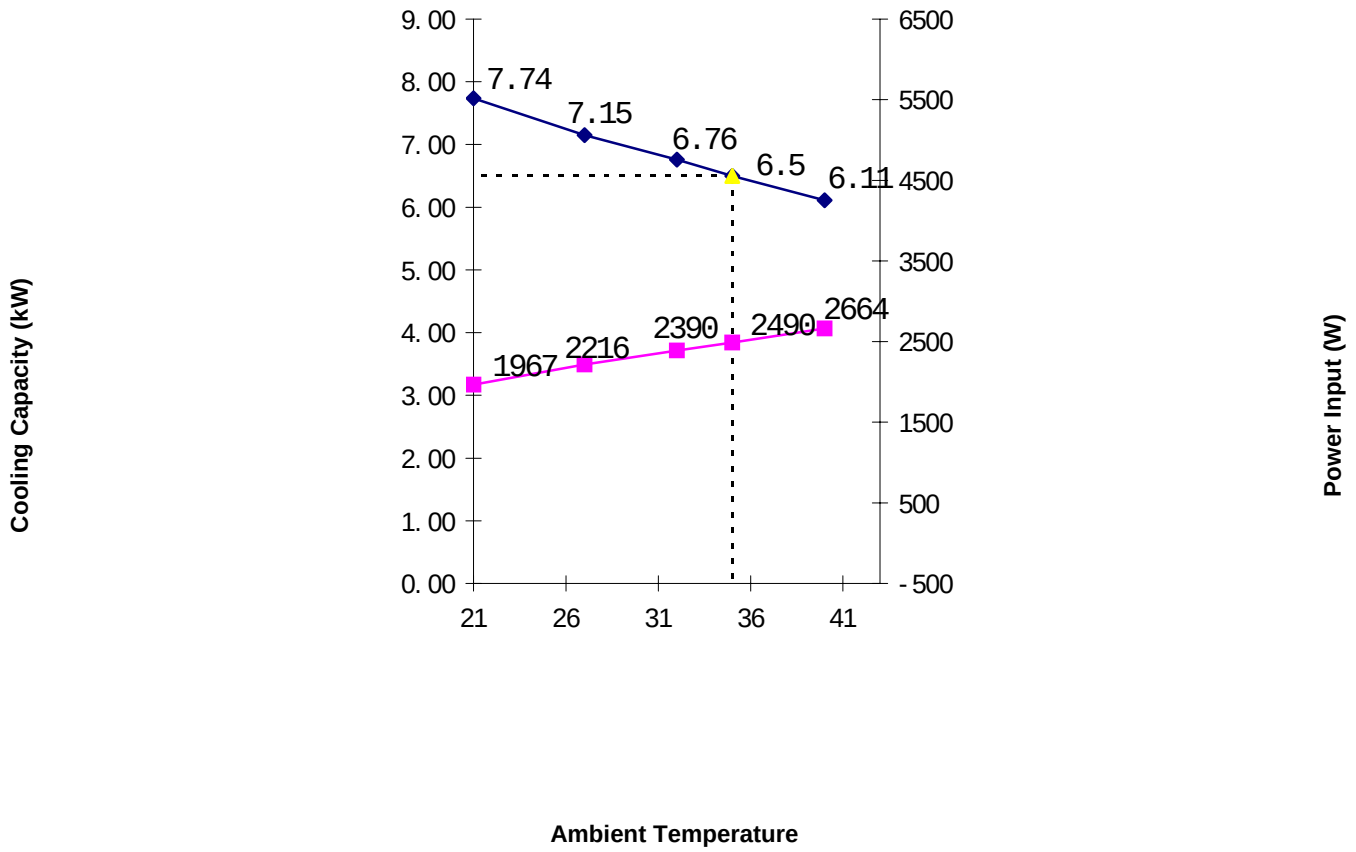

Heating Capacity

Heating Characteristic Curve of RAC-24GH4

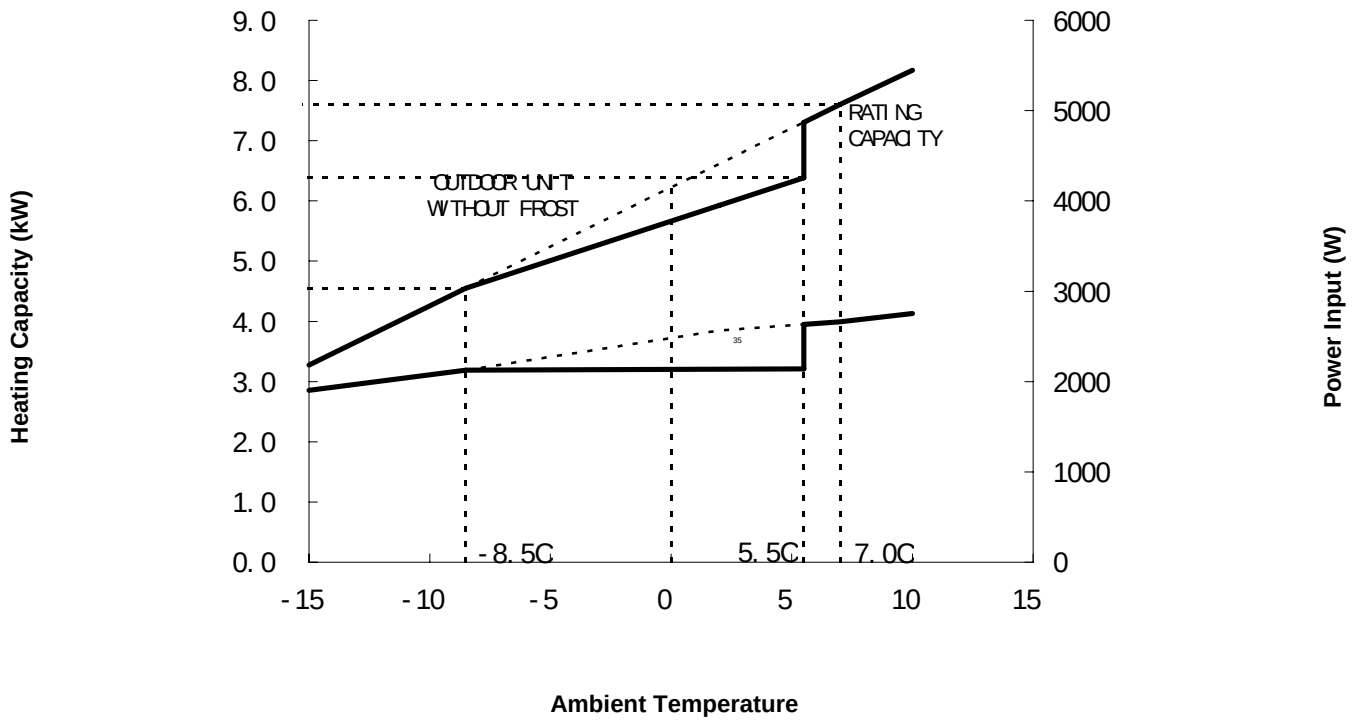

4.4. CORRECTION FACTOR ACCORDING TO PIPING LENGTH

Correction Factor for **Cooling Capacity** according to Piping Length

The cooling capacity should be corrected according to the following formula:

CCA = CC x F

CCA: Actual Corrected Cooling Capacity (kcal/h)

CC: Cooling Capacity in the Performance Table (kcal/h)

F: Correction Factor Based on the Equivalent Piping Length

Correction Factor for **Heating Capacity** according to Piping Length

The heating capacity should be corrected according to the following formula:

HCA= HC x F

HCA: Actual Corrected Heating Capacity (kcal/h)

HC: Heating Capacity in the Performance Table (kcal/h)

F: Correction Factor Based on the Equivalent Piping Length

The correction factors are shown in the following figure.

Equivalent Piping Length for:

- One 90° Elbow is 0.5m.
- One 180° Curve is 1.5m.
- One Multi-Kit is 0.5m.

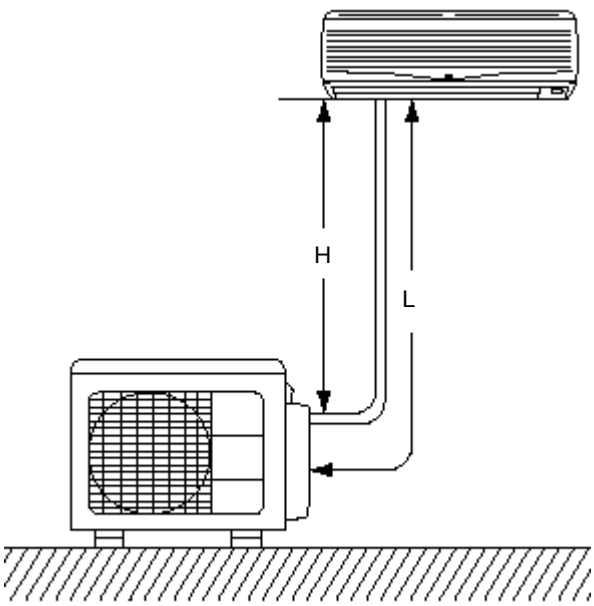

H: Vertical Distance Between Indoor Unit and Outdoor Units in Meters

L: Actual One-Way Piping Length Between Indoor Unit and Outdoor Unit in Meters

EL: Equivalent Total Distance Between Indoor Unit and Outdoor Unit in Meters (Equivalent One-Way Piping Length)

Model 2.5, 3.5 kW

RAK-25NH5, RAI-25NH5, RAD-25NH5, RAF-25NH5, RAK-35NH5 ,RAI-35NH5 ,RAD-35NH5, RAF-35NH5

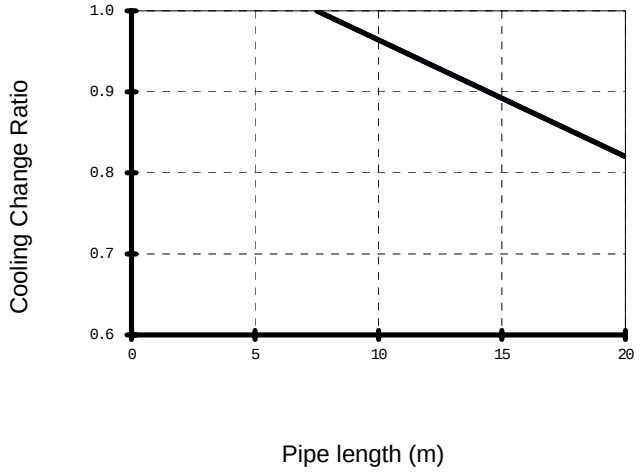

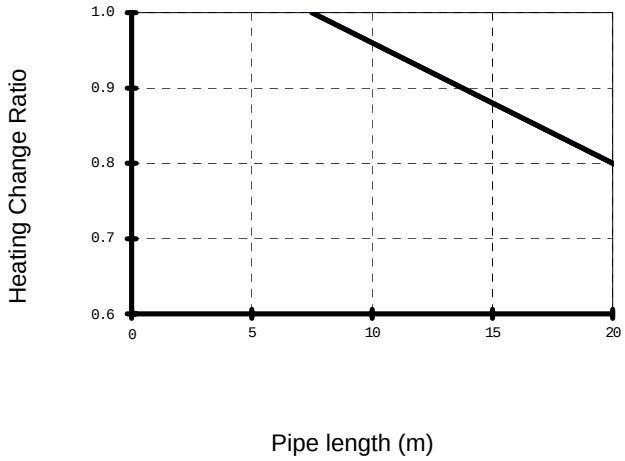

Model 5.0 kW

RAK-50NH5, RAI-50NH5, RAF-50NH5

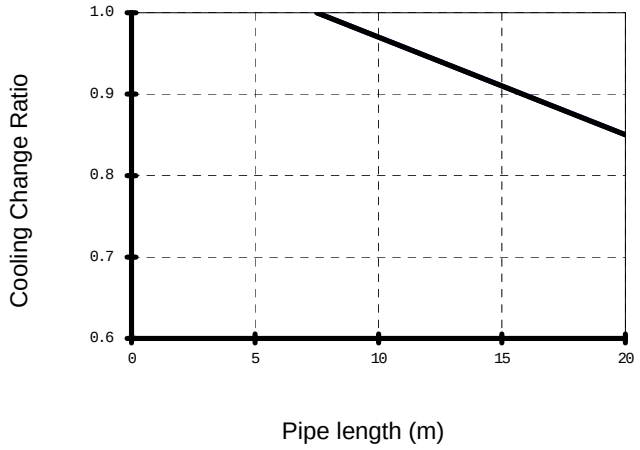

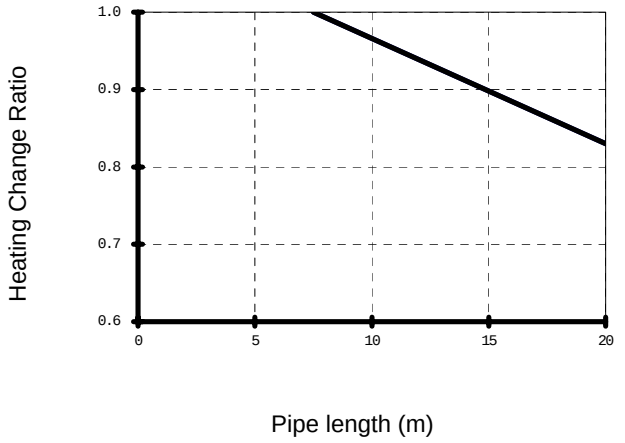

Model Multi Outdoor 4.0 & 5.4 kW

RAM-40QH5 , RAM-55QH5

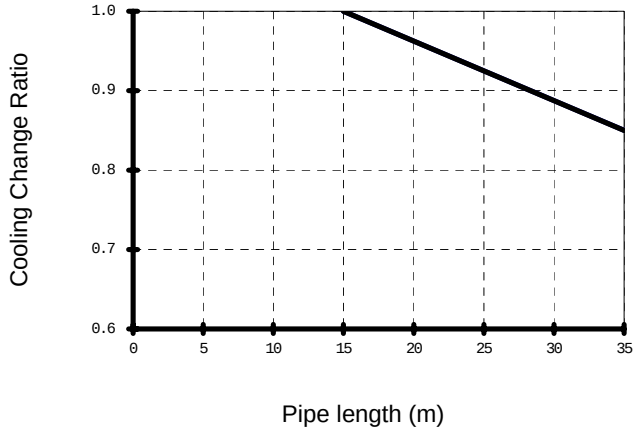

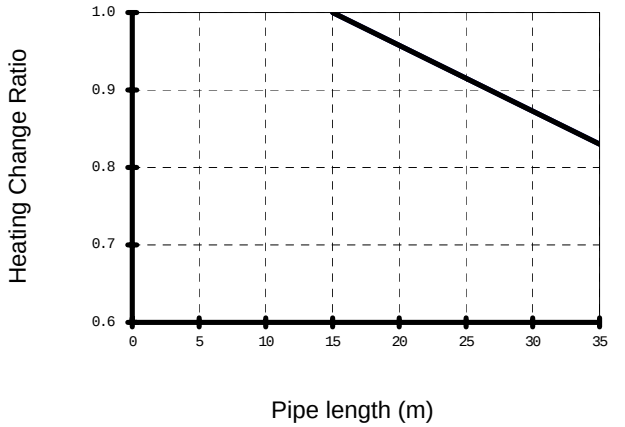

Model Multi Outdoor 6.3 kW

RAM-65QH5

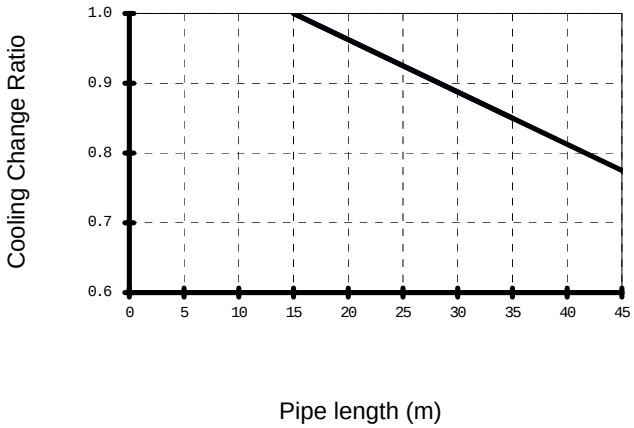

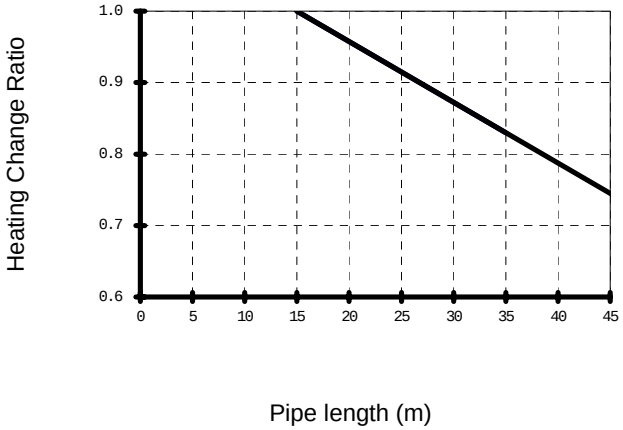

Model Multi Outdoor 7.1 kW

RAM-72QH5

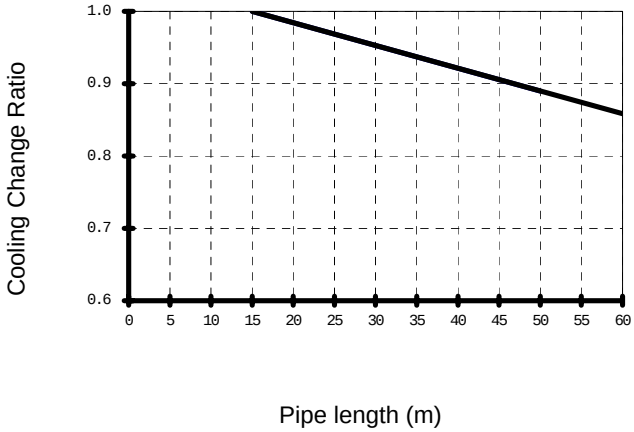

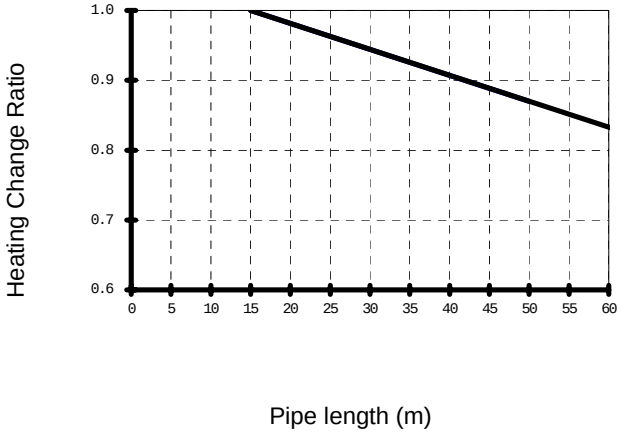

Model Multi Outdoor 8.0 kW

RAM-80QH5

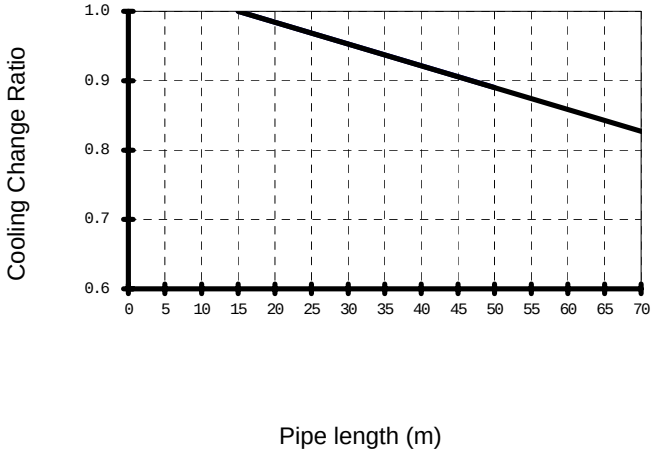

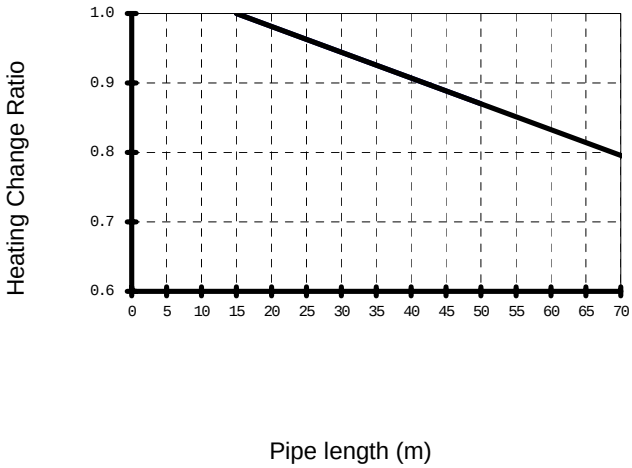

Model Split 3/4hp, 1hp

RAS/RAC-07G4*, RAS/RAC-07GH4, RAS/RAC-09G4*, RAS/RAC-09GH4

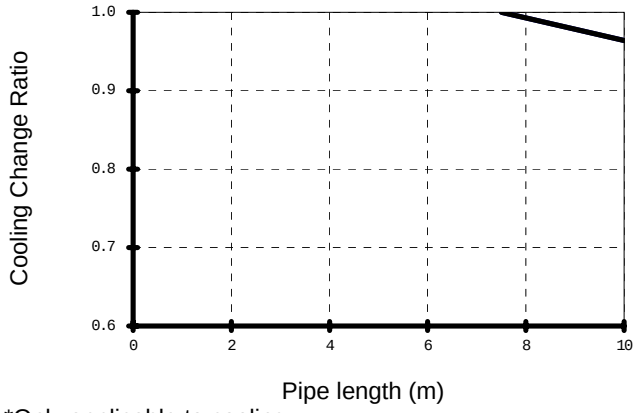

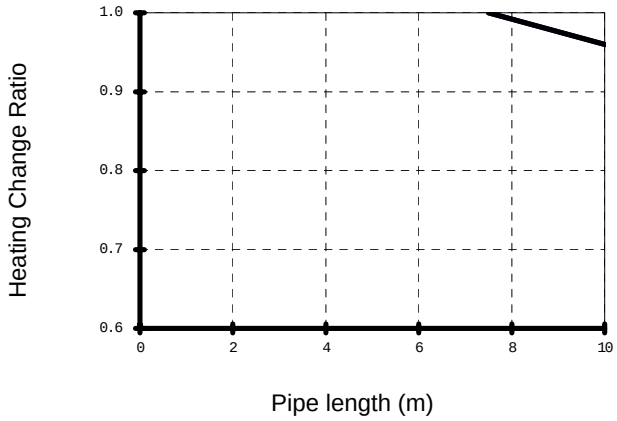

*Only applicable to cooling

Model Split 1.5hp, 2.0hp, 2.5hp

RAS/RAC-14G4*, RAS/RAC-14GH4, RAS/RAC-18G4*, RAS/RAC-18GH4, RAS/RAC-24G4*, RAS/RAC-24GH4

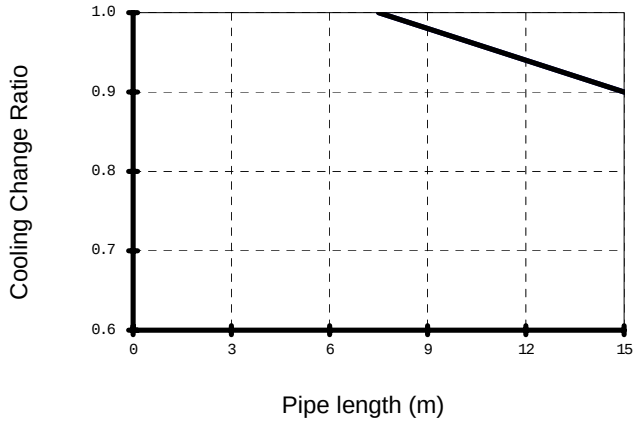

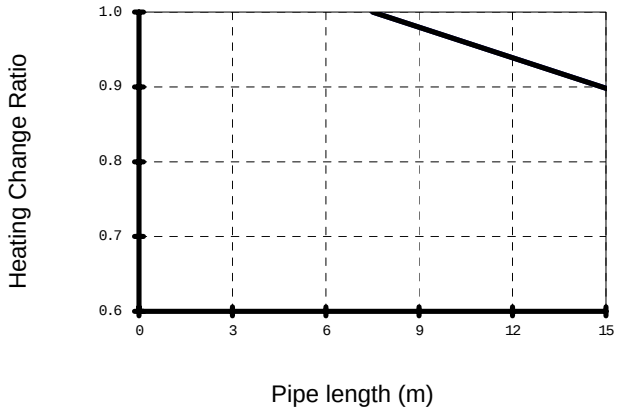

*Only applicable to cooling

Model Split Inverter 2.5kW

RAS/RAC-18YH5, RAS/RAC-25YH5, RAS/RAC-35YH5

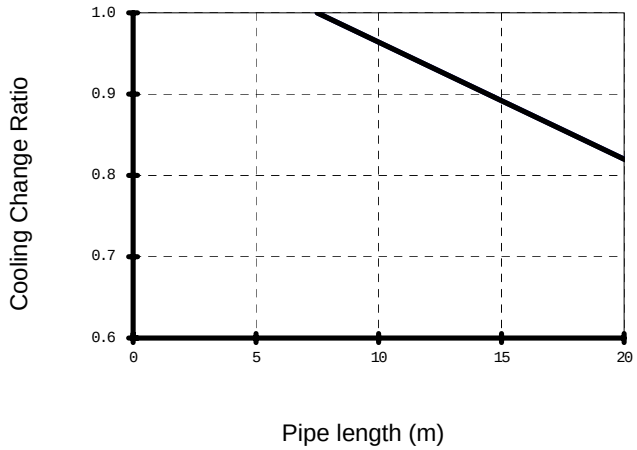

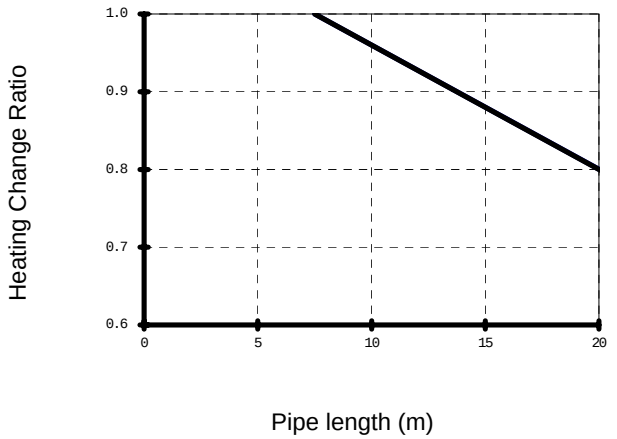

Model Split Inverter 3.5kW

RAS/RAC-50YH5

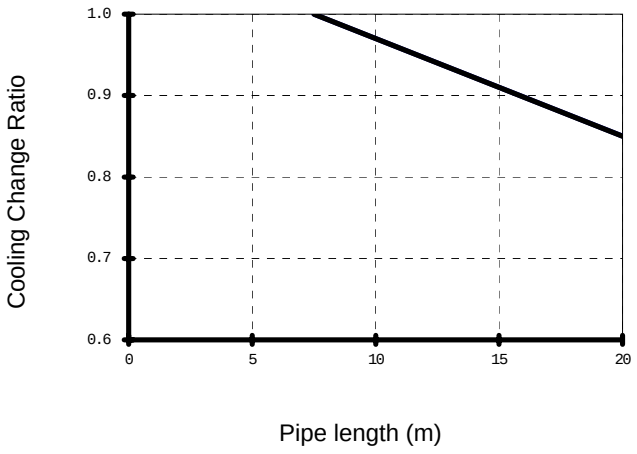

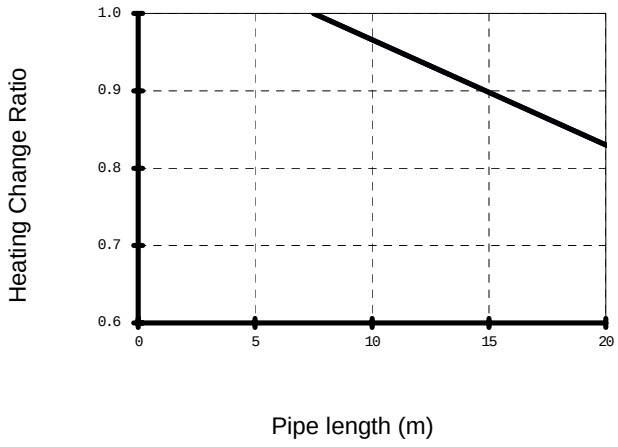

Model Split Inverter 6.0kW

RAS/RAC-60YH5 , RAS/RAC-70YH5 , RAS/RAC-80YH5

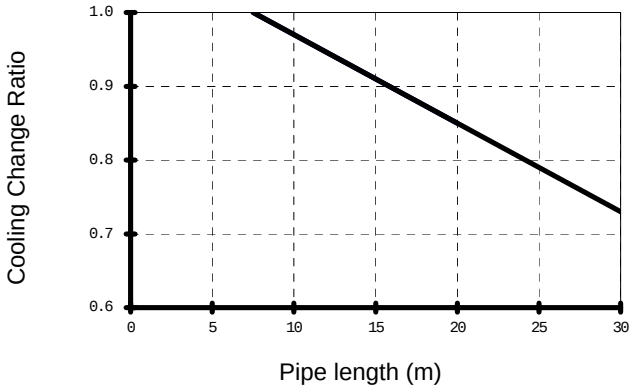

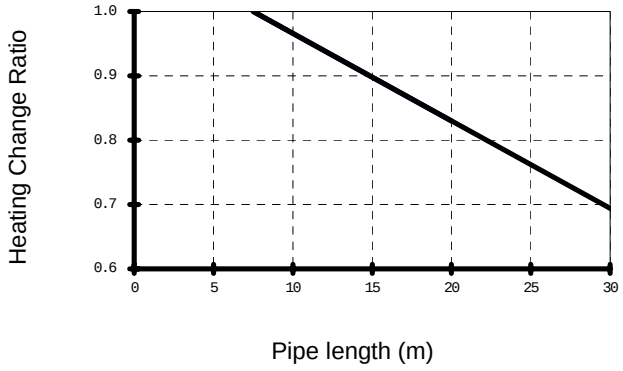

4.5. SELECTION TABLE

RAK-25NH5/RAC-25NH5

[50Hz, 230V]

INDOOR		OUTDOOR TEMPERATURE (°CDB)																	
EWB	EDB	21			27			32			35			40			43		
°C	°C	TC	SHC	PI	TC	SHC	PI	TC	SHC	PI	TC	SHC	PI	TC	SHC	PI	TC	SHC	PI
12.0	18	2248	1990	470	2080	1837	554	2050	1820	639	1975	1740	667	1850	1640	716	1775	1560	744
14.0	20	2415	1990	470	2248	1856	560	2200	1820	646	2125	1760	674	1975	1640	723	1900	1580	758
16.0	22	2583	1990	476	2391	1856	567	2350	1820	653	2275	1760	688	2125	1640	737	2050	1580	765
18.0	25	2750	2162	482	2535	2009	573	2500	1980	660	2400	1900	688	2250	1780	744	2150	1700	771
19.0	27	2846	2277	488	2630	2104	580	2600	2080	667	2500	2000	695	2350	1880	744	2250	1800	771
22.0	30	3157	2257	488	2917	2085	580	2875	2060	674	2775	1980	702	2500	1920	771	2325	1880	813
24.0	32	3372	2257	495	3109	2085	586	3075	2060	674	2950	1980	709	2600	1960	792	2375	1940	841

COOLING

[50Hz, 230V]

INDOOR	OUTDOOR TEMPERATURE (°CDB)																	
EDB	-10			-5			0			7			10			15		
°C	TC	SHC	PI	TC	SHC	PI	TC	SHC	PI	TC	SHC	PI	TC	SHC	PI	TC	SHC	PI
16	1995	0	684	2461	0	733	2996	0	820	3539	0	831	3861	0	853	4456	0	896
18	1978	0	693	2436	0	752	2965	0	841	3521	0	873	3847	0	891	4438	0	938
20	1960	0	702	2415	0	765	2940	0	855	3500	0	900	3763	0	932	4410	0	981
22	1943	0	711	2380	0	785	2909	0	876	3479	0	936	3805	0	966	4389	0	1022
24	1925	0	720	2359	0	804	2884	0	896	3458	0	972	3784	0	1003	4326	0	1063

HEATING

RAK-35NH5/RAC-35NH5

[50Hz, 230V]

INDOOR		OUTDOOR TEMPERATURE (°CDB)																	
EWB	EDB	21			27			32			35			40			43		
°C	°C	TC	SHC	PI	TC	SHC	PI	TC	SHC	PI	TC	SHC	PI	TC	SHC	PI	TC	SHC	PI
12.0	18	2559	1618	594	2368	1493	700	2870	1820	994	2765	1740	1037	2590	1640	1112	2485	1560	1156
14.0	20	2749	1618	594	2559	1509	708	3080	1820	1004	2975	1760	1048	2765	1640	1123	2660	1580	1177
16.0	22	2940	1618	602	2722	1509	716	3290	1820	1015	3185	1760	1069	2975	1640	1145	2870	1580	1188
18.0	25	3131	1758	609	2886	1633	724	3500	1980	1026	3360	1900	1069	3150	1780	1156	3010	1700	1199
19.0	27	3239	1851	617	2994	1711	733	3640	2080	1037	3500	2000	1080	3290	1880	1156	3150	1800	1199
22.0	30	3593	1836	617	3321	1696	733	4025	2060	1048	3885	1980	1091	3500	1920	1199	3255	1880	1264
24.0	32	3838	1836	625	3539	1696	741	4305	2060	1048	4130	1980	1102	3640	1960	1231	3325	1940	1307

COOLING

[50Hz, 230V]

INDOOR	OUTDOOR TEMPERATURE (°CDB)																	
EDB	-10			-5			0			7			10			15		
°C	TC	SHC	PI	TC	SHC	PI	TC	SHC	PI	TC	SHC	PI	TC	SHC	PI	TC	SHC	PI
16	2736	0	1003	3374	0	1074	4109	0	1203	4853	0	1218	5294	0	1251	6110	0	1313
18	2712	0	1016	3341	0	1102	4066	0	1233	4829	0	1280	5275	0	1307	6086	0	1375
20	2688	0	1030	3312	0	1122	4032	0	1254	4800	0	1320	5160	0	1366	6048	0	1439
22	2664	0	1043	3264	0	1151	3989	0	1284	4771	0	1373	5218	0	1416	6019	0	1498
24	2640	0	1056	3235	0	1179	3955	0	1315	4742	0	1426	5189	0	1470	5933	0	1559

HEATING

RAK-50NH5/RAC-50NH5

[50Hz, 230V]

INDOOR		OUTDOOR TEMPERATURE (°CDB)																	
EWB	EDB	21			27			32			35			40			43		
°C	°C	TC	SHC	PI	TC	SHC	PI	TC	SHC	PI	TC	SHC	PI	TC	SHC	PI	TC	SHC	PI
12.0	18	3240	1434	867	2999	1323	1022	4100	1820	1638	3950	1740	1709	3700	1640	1833	3550	1560	1905
14.0	20	3481	1434	867	3240	1337	1034	4400	1820	1655	4250	1760	1727	3950	1640	1851	3800	1580	1940
16.0	22	3722	1434	879	3447	1337	1046	4700	1820	1673	4550	1760	1762	4250	1640	1887	4100	1580	1958
18.0	25	3964	1558	890	3653	1448	1058	5000	1980	1691	4800	1900	1762	4500	1780	1905	4300	1700	1976
19.0	27	4101	1641	901	3791	1517	1070	5200	2080	1709	5000	2000	1780	4700	1880	1905	4500	1800	1976
22.0	30	4550	1627	901	4205	1503	1070	5750	2060	1727	5550	1980	1798	5000	1920	1976	4650	1880	2083
24.0	32	4860	1627	913	4481	1503	1082	6150	2060	1727	5900	1980	1816	5200	1960	2029	4750	1940	2154

COOLING

[50Hz, 230V]

INDOOR	OUTDOOR TEMPERATURE (°CDB)																	
EDB	-10			-5			0			7			10			15		
°C	TC	SHC	PI	TC	SHC	PI	TC	SHC	PI	TC	SHC	PI	TC	SHC	PI	TC	SHC	PI
16	3705	0	1497	4570	0	1604	5564	0	1795	6572	0	1818	7170	0	1868	8275	0	1960
18	3673	0	1517	4524	0	1645	5506	0	1840	6539	0	1911	7144	0	1950	8242	0	2053
20	3640	0	1537	4485	0	1675	5460	0	1872	6500	0	1970	6988	0	2039	8190	0	2147
22	3608	0	1556	4420	0	1718	5402	0	1917	6461	0	2049	7066	0	2114	8151	0	2236
24	3575	0	1576	4381	0	1759	5356	0	1962	6422	0	2128	7027	0	2195	8034	0	2327

HEATING

RAK-65NH5/RAC-65NH5

[50Hz, 230V]

INDOOR		OUTDOOR TEMPERATURE (°CDB)																	
EWB	EDB	21			27			32			35			40			43		
°C	°C	TC	SHC	PI	TC	SHC	PI	TC	SHC	PI	TC	SHC	PI	TC	SHC	PI	TC	SHC	PI
12.0	18	4423	1618	1264	4094	1493	1490	4961	1820	2116	4780	1740	2208	4477	1640	2369	4296	1560	2461
14.0	20	4753	1618	1264	4423	1509	1508	5324	1820	2139	5143	1760	2231	4780	1640	2392	4598	1580	2507
16.0	22	5082	1618	1281	4706	1509	1525	5687	1820	2162	5506	1760	2277	5143	1640	2438	4961	1580	2530
18.0	25	5411	1758	1298	4988	1633	1543	6050	1980	2185	5808	1900	2277	5445	1780	2461	5203	1700	2553
19.0	27	5600	1851	1314	5176	1711	1560	6292	2080	2208	6050	2000	2300	5687	1880	2461	5445	1800	2553
22.0	30	6211	1836	1314	5741	1696	1560	6958	2060	2231	6716	1980	2323	6050	1920	2553	5627	1880	2691
24.0	32	6635	1836	1331	6117	1696	1578	7442	2060	2231	7139	1980	2346	6292	1960	2622	5748	1940	2783

COOLING

[50Hz, 230V]

INDOOR	OUTDOOR TEMPERATURE (°CDB)																	
EDB	-10			-5			0			7			10			15		
°C	TC	SHC	PI	TC	SHC	PI	TC	SHC	PI	TC	SHC	PI	TC	SHC	PI	TC	SHC	PI
16	4019	0	1824	4956	0	1954	6035	0	2186	7128	0	2215	7776	0	2275	8975	0	2388
18	3983	0	1848	4907	0	2004	5971	0	2242	7092	0	2328	7748	0	2376	8939	0	2501
20	3948	0	1872	4865	0	2040	5922	0	2280	7050	0	2400	7579	0	2484	8883	0	2616
22	3913	0	1896	4794	0	2093	5859	0	2335	7008	0	2496	7663	0	2575	8841	0	2724
24	3878	0	1920	4752	0	2143	5809	0	2390	6965	0	2592	7621	0	2674	8714	0	2834

HEATING

RAI-25NH5/RAC-25NH5

[50Hz, 230V]

INDOOR		OUTDOOR TEMPERATURE (°CDB)																	
EWB	EDB	21			27			32			35			40			43		
°C	°C	TC	SHC	PI	TC	SHC	PI	TC	SHC	PI	TC	SHC	PI	TC	SHC	PI	TC	SHC	PI
12.0	18	2200	1947	460	2036	1797	542	2050	1820	639	1975	1740	667	1850	1640	716	1775	1560	744
14.0	20	2364	1947	460	2200	1816	548	2200	1820	646	2125	1760	674	1975	1640	723	1900	1580	758
16.0	22	2528	1947	466	2340	1816	555	2350	1820	653	2275	1760	688	2125	1640	737	2050	1580	765
18.0	25	2691	2116	472	2481	1966	561	2500	1980	660	2400	1900	688	2250	1780	744	2150	1700	771
19.0	27	2785	2228	478	2574	2060	567	2600	2080	667	2500	2000	695	2350	1880	744	2250	1800	771
22.0	30	3089	2209	478	2855	2041	567	2875	2060	674	2775	1980	702	2500	1920	771	2325	1880	813
24.0	32	3300	2209	484	3043	2041	574	3075	2060	674	2950	1980	709	2600	1960	792	2375	1940	841

COOLING

[50Hz, 230V]

INDOOR	OUTDOOR TEMPERATURE (°CDB)																	
EDB	-10			-5			0			7			10			15		
°C	TC	SHC	PI	TC	SHC	PI	TC	SHC	PI	TC	SHC	PI	TC	SHC	PI	TC	SHC	PI
16	1995	0	684	2461	0	733	2996	0	820	3539	0	831	3861	0	853	4456	0	896
18	1978	0	693	2436	0	752	2965	0	841	3521	0	873	3847	0	891	4438	0	938
20	1960	0	702	2415	0	765	2940	0	855	3500	0	900	3763	0	932	4410	0	981
22	1943	0	711	2380	0	785	2909	0	876	3479	0	936	3805	0	966	4389	0	1022
24	1925	0	720	2359	0	804	2884	0	896	3458	0	972	3784	0	1003	4326	0	1063

HEATING

RAI-35NH5/RAC-35NH5

[50Hz, 230V]

INDOOR		OUTDOOR TEMPERATURE (°CDB)																	
EWB	EDB	21			27			32			35			40			43		
°C	°C	TC	SHC	PI	TC	SHC	PI	TC	SHC	PI	TC	SHC	PI	TC	SHC	PI	TC	SHC	PI
12.0	18	2595	1641	602	2402	1514	710	2870	1820	994	2765	1740	1037	2590	1640	1112	2485	1560	1156
14.0	20	2788	1641	602	2595	1530	718	3080	1820	1004	2975	1760	1048	2765	1640	1123	2660	1580	1177
16.0	22	2981	1641	610	2761	1530	726	3290	1820	1015	3185	1760	1069	2975	1640	1145	2870	1580	1188
18.0	25	3175	1783	618	2926	1656	735	3500	1980	1026	3360	1900	1069	3150	1780	1156	3010	1700	1199
19.0	27	3285	1877	626	3037	1735	743	3640	2080	1037	3500	2000	1080	3290	1880	1156	3150	1800	1199
22.0	30	3644	1861	626	3368	1719	743	4025	2060	1048	3885	1980	1091	3500	1920	1199	3255	1880	1264
24.0	32	3892	1861	634	3589	1719	751	4305	2060	1048	4130	1980	1102	3640	1960	1231	3325	1940	1307

COOLING

[50Hz, 230V]

INDOOR	OUTDOOR TEMPERATURE (°CDB)																	
EDB	-10			-5			0			7			10			15		
°C	TC	SHC	PI	TC	SHC	PI	TC	SHC	PI	TC	SHC	PI	TC	SHC	PI	TC	SHC	PI
16	2736	0	1003	3374	0	1074	4109	0	1203	4853	0	1218	5294	0	1251	6110	0	1313
18	2712	0	1016	3341	0	1102	4066	0	1233	4829	0	1280	5275	0	1307	6086	0	1375
20	2688	0	1030	3312	0	1122	4032	0	1254	4800	0	1320	5160	0	1366	6048	0	1439
22	2664	0	1043	3264	0	1151	3989	0	1284	4771	0	1373	5218	0	1416	6019	0	1498
24	2640	0	1056	3235	0	1179	3955	0	1315	4742	0	1426	5189	0	1470	5933	0	1559

HEATING

RAI-50NH5/RAC-50NH5

[50Hz, 230V]

INDOOR		OUTDOOR TEMPERATURE (°CDB)																	
EWB	EDB	21			27			32			35			40			43		
°C	°C	TC	SHC	PI	TC	SHC	PI	TC	SHC	PI	TC	SHC	PI	TC	SHC	PI	TC	SHC	PI
12.0	18	2979	1319	892	2758	1217	1051	4100	1820	1831	3950	1740	1910	3700	1640	2050	3550	1560	2129
14.0	20	3201	1319	892	2979	1230	1063	4400	1820	1851	4250	1760	1930	3950	1640	2070	3800	1580	2169
16.0	22	3423	1319	903	3170	1230	1076	4700	1820	1871	4550	1760	1970	4250	1640	2109	4100	1580	2189
18.0	25	3645	1433	915	3360	1331	1088	5000	1980	1891	4800	1900	1970	4500	1780	2129	4300	1700	2209
19.0	27	3772	1509	927	3487	1395	1100	5200	2080	1910	5000	2000	1990	4700	1880	2129	4500	1800	2209
22.0	30	4184	1496	927	3867	1382	1100	5750	2060	1930	5550	1980	2010	5000	1920	2209	4650	1880	2328
24.0	32	4469	1496	939	4121	1382	1113	6150	2060	1930	5900	1980	2030	5200	1960	2269	4750	1940	2408

COOLING

[50Hz, 230V]

INDOOR	OUTDOOR TEMPERATURE (°CDB)																	
EDB	-10			-5			0			7			10			15		
°C	TC	SHC	PI	TC	SHC	PI	TC	SHC	PI	TC	SHC	PI	TC	SHC	PI	TC	SHC	PI
16	3705	0	1642	4570	0	1758	5564	0	1968	6572	0	1994	7170	0	2048	8275	0	2149
18	3673	0	1663	4524	0	1804	5506	0	2017	6539	0	2095	7144	0	2138	8242	0	2251
20	3640	0	1685	4485	0	1836	5460	0	2052	6500	0	2160	6988	0	2236	8190	0	2354
22	3608	0	1706	4420	0	1884	5402	0	2102	6461	0	2246	7066	0	2318	8151	0	2452
24	3575	0	1728	4381	0	1929	5356	0	2151	6422	0	2333	7027	0	2406	8034	0	2551

HEATING

RAD-25NH5/RAC-25NH5

[50Hz, 230V]

INDOOR		OUTDOOR TEMPERATURE (°CDB)																	
EWB	EDB	21			27			32			35			40			43		
°C	°C	TC	SHC	PI	TC	SHC	PI	TC	SHC	PI	TC	SHC	PI	TC	SHC	PI	TC	SHC	PI
12.0	18	2110	1868	441	1953	1724	520	2050	1820	639	1975	1740	667	1850	1640	716	1775	1560	744
14.0	20	2267	1868	441	2110	1742	526	2200	1820	646	2125	1760	674	1975	1640	723	1900	1580	758
16.0	22	2424	1868	447	2245	1742	532	2350	1820	653	2275	1760	688	2125	1640	737	2050	1580	765
18.0	25	2582	2029	453	2380	1886	538	2500	1980	660	2400	1900	688	2250	1780	744	2150	1700	771
19.0	27	2671	2137	459	2469	1976	544	2600	2080	667	2500	2000	695	2350	1880	744	2250	1800	771
22.0	30	2963	2119	459	2739	1958	544	2875	2060	674	2775	1980	702	2500	1920	771	2325	1880	813
24.0	32	3165	2119	464	2918	1958	550	3075	2060	674	2950	1980	709	2600	1960	792	2375	1940	841

COOLING

[50Hz, 230V]

INDOOR	OUTDOOR TEMPERATURE (°CDB)																	
EDB	-10			-5			0			7			10			15		
°C	TC	SHC	PI	TC	SHC	PI	TC	SHC	PI	TC	SHC	PI	TC	SHC	PI	TC	SHC	PI
16	1995	0	737	2461	0	790	2996	0	884	3539	0	895	3861	0	920	4456	0	965
18	1978	0	747	2436	0	810	2965	0	906	3521	0	941	3847	0	960	4438	0	1011
20	1960	0	757	2415	0	825	2940	0	922	3500	0	970	3763	0	1004	4410	0	1057
22	1943	0	766	2380	0	846	2909	0	944	3479	0	1009	3805	0	1041	4389	0	1101
24	1925	0	776	2359	0	866	2884	0	966	3458	0	1048	3784	0	1081	4326	0	1146

HEATING

RAD-35NH5/RAC-35NH5

[50Hz, 230V]

INDOOR		OUTDOOR TEMPERATURE (°CDB)																	
EWB	EDB	21			27			32			35			40			43		
°C	°C	TC	SHC	PI	TC	SHC	PI	TC	SHC	PI	TC	SHC	PI	TC	SHC	PI	TC	SHC	PI
12.0	18	2879	2639	767	2664	2436	904	2870	2639	1141	2765	2523	1190	2590	2378	1277	2485	2262	1327
14.0	20	3093	2639	767	2879	2461	914	3080	2639	1153	2975	2552	1203	2765	2378	1290	2660	2291	1352
16.0	22	3308	2639	777	3063	2461	925	3290	2639	1166	3185	2552	1228	2975	2378	1314	2870	2291	1364
18.0	25	3522	2867	787	3246	2664	936	3500	2871	1178	3360	2755	1228	3150	2581	1327	3010	2465	1376
19.0	27	3644	3020	797	3369	2791	946	3640	3016	1190	3500	2900	1240	3290	2726	1327	3150	2610	1376
22.0	30	4043	2994	797	3736	2766	946	4025	2987	1203	3885	2871	1252	3500	2784	1376	3255	2726	1451
24.0	32	4318	2994	807	3981	2766	957	4305	2987	1203	4130	2871	1265	3640	2842	1414	3325	2813	1500

COOLING

[50Hz, 230V]

INDOOR	OUTDOOR TEMPERATURE (°CDB)																	
EDB	-10			-5			0			7			10			15		
°C	TC	SHC	PI	TC	SHC	PI	TC	SHC	PI	TC	SHC	PI	TC	SHC	PI	TC	SHC	PI
16	2736	0	1292	3374	0	1384	4109	0	1549	4853	0	1569	5294	0	1612	6110	0	1692
18	2712	0	1309	3341	0	1420	4066	0	1588	4829	0	1649	5275	0	1683	6086	0	1771
20	2688	0	1326	3312	0	1445	4032	0	1615	4800	0	1700	5160	0	1760	6048	0	1853
22	2664	0	1343	3264	0	1482	3989	0	1654	4771	0	1768	5218	0	1824	6019	0	1930
24	2640	0	1360	3235	0	1518	3955	0	1693	4742	0	1836	5189	0	1894	5933	0	2008

HEATING

RAF-25NH5/RAC-25NH5

[50Hz, 230V]

INDOOR		OUTDOOR TEMPERATURE (°CDB)																	
EWB	EDB	21			27			32			35			40			43		
°C	°C	TC	SHC	PI	TC	SHC	PI	TC	SHC	PI	TC	SHC	PI	TC	SHC	PI	TC	SHC	PI
12.0	18	2110	1868	737	1953	1724	824	2050	1820	994	1975	1740	1037	1850	1640	1112	1775	1560	1156
14.0	20	2267	1868	737	2110	1742	834	2200	1820	1004	2125	1760	1048	1975	1640	1123	1900	1580	1177
16.0	22	2424	1868	747	2245	1742	844	2350	1820	1015	2275	1760	1069	2125	1640	1145	2050	1580	1188
18.0	25	2582	2029	756	2380	1886	853	2500	1980	1026	2400	1900	1069	2250	1780	1156	2150	1700	1199
19.0	27	2671	2137	766	2469	1976	863	2600	2080	1037	2500	2000	1080	2350	1880	1156	2250	1800	1199
22.0	30	2963	2119	766	2739	1958	863	2875	2060	1048	2775	1980	1091	2500	1920	1199	2325	1880	1264
24.0	32	3165	2119	776	2918	1958	873	3075	2060	1048	2950	1980	1102	2600	1960	1231	2375	1940	1307

COOLING

[50Hz, 230V]

INDOOR	OUTDOOR TEMPERATURE (°CDB)																	
EDB	-10			-5			0			7			10			15		
°C	TC	SHC	PI	TC	SHC	PI	TC	SHC	PI	TC	SHC	PI	TC	SHC	PI	TC	SHC	PI
16	2736	0	1003	3374	0	1074	4109	0	1203	4853	0	1218	5294	0	1251	6110	0	1313
18	2712	0	1016	3341	0	1102	4066	0	1233	4829	0	1280	5275	0	1307	6086	0	1375
20	2688	0	1030	3312	0	1122	4032	0	1254	4800	0	1320	5160	0	1366	6048	0	1439
22	2664	0	1043	3264	0	1151	3989	0	1284	4771	0	1373	5218	0	1416	6019	0	1498
24	2640	0	1056	3235	0	1179	3955	0	1315	4742	0	1426	5189	0	1470	5933	0	1559

HEATING

RAF-35NH5/RAC-35NH5

[50Hz, 230V]

INDOOR		OUTDOOR TEMPERATURE (°CDB)																	
EWB	EDB	21			27			32			35			40			43		
°C	°C	TC	SHC	PI	TC	SHC	PI	TC	SHC	PI	TC	SHC	PI	TC	SHC	PI	TC	SHC	PI
12.0	18	2879	2639	767	2664	2436	904	2870	2639	1141	2765	2523	1190	2590	2378	1277	2485	2262	1327
14.0	20	3093	2639	767	2879	2461	914	3080	2639	1153	2975	2552	1203	2765	2378	1290	2660	2291	1352
16.0	22	3308	2639	777	3063	2461	925	3290	2639	1166	3185	2552	1228	2975	2378	1314	2870	2291	1364
18.0	25	3522	2867	787	3246	2664	936	3500	2871	1178	3360	2755	1228	3150	2581	1327	3010	2465	1376
19.0	27	3644	3020	797	3369	2791	946	3640	3016	1190	3500	2900	1240	3290	2726	1327	3150	2610	1376
22.0	30	4043	2994	797	3736	2766	946	4025	2987	1203	3885	2871	1252	3500	2784	1376	3255	2726	1451
24.0	32	4318	2994	807	3981	2766	957	4305	2987	1203	4130	2871	1265	3640	2842	1414	3325	2813	1500

COOLING

[50Hz, 230V]

INDOOR	OUTDOOR TEMPERATURE (°CDB)																	
EDB	-10			-5			0			7			10			15		
°C	TC	SHC	PI	TC	SHC	PI	TC	SHC	PI	TC	SHC	PI	TC	SHC	PI	TC	SHC	PI
16	2736	0	1292	3374	0	1384	4109	0	1549	4853	0	1569	5294	0	1612	6110	0	1692
18	2712	0	1309	3341	0	1420	4066	0	1588	4829	0	1649	5275	0	1683	6086	0	1771
20	2688	0	1326	3312	0	1445	4032	0	1615	4800	0	1700	5160	0	1760	6048	0	1853
22	2664	0	1343	3264	0	1482	3989	0	1654	4771	0	1768	5218	0	1824	6019	0	1930
24	2640	0	1360	3235	0	1518	3955	0	1693	4742	0	1836	5189	0	1894	5933	0	2008

HEATING

RAF-50NH5/RAC-50NH5

[50Hz, 230V]

INDOOR		OUTDOOR TEMPERATURE (°CDB)																	
EWB	EDB	21			27			32			35			40			43		
°C	°C	TC	SHC	PI	TC	SHC	PI	TC	SHC	PI	TC	SHC	PI	TC	SHC	PI	TC	SHC	PI
12.0	18	3209	2663	859	2970	2458	1012	4100	3413	1638	3950	3263	1709	3700	3075	1833	3550	2925	1905
14.0	20	3448	2663	859	3209	2483	1024	4400	3413	1655	4250	3300	1727	3950	3075	1851	3800	2963	1940
16.0	22	3687	2663	870	3413	2483	1036	4700	3413	1673	4550	3300	1762	4250	3075	1887	4100	2963	1958
18.0	25	3925	2893	882	3618	2688	1048	5000	3713	1691	4800	3563	1762	4500	3338	1905	4300	3188	1976
19.0	27	4062	3047	893	3755	2816	1060	5200	3900	1709	5000	3750	1780	4700	3525	1905	4500	3375	1976
22.0	30	4506	3021	893	4164	2791	1060	5750	3863	1727	5550	3713	1798	5000	3600	1976	4650	3525	2083
24.0	32	4813	3021	904	4438	2791	1072	6150	3863	1727	5900	3713	1816	5200	3675	2029	4750	3638	2154

COOLING

[50Hz, 230V]

INDOOR	OUTDOOR TEMPERATURE (°CDB)																	
EDB	-10			-5			0			7			10			15		
°C	TC	SHC	PI	TC	SHC	PI	TC	SHC	PI	TC	SHC	PI	TC	SHC	PI	TC	SHC	PI
16	3819	0	1406	4710	0	1506	5735	0	1685	6774	0	1708	7390	0	1754	8529	0	1841
18	3786	0	1425	4663	0	1545	5675	0	1728	6740	0	1795	7363	0	1832	8496	0	1928
20	3752	0	1443	4623	0	1573	5628	0	1758	6700	0	1850	7203	0	1915	8442	0	2017
22	3719	0	1462	4556	0	1613	5568	0	1800	6660	0	1924	7283	0	1985	8402	0	2100
24	3685	0	1480	4516	0	1652	5521	0	1843	6620	0	1998	7243	0	2061	8281	0	2185

HEATING

RAM-40QH5

[50Hz, 230V]

INDOOR		OUTDOOR TEMPERATURE (°CDB)																	
EWB	EDB	21			27			32			35			40			43		
°C	°C	TC	SHC	PI	TC	SHC	PI	TC	SHC	PI	TC	SHC	PI	TC	SHC	PI	TC	SHC	PI
12.0	18	3502	3633	820	3241	3353	966	3280	3413	1145	3160	3263	1195	2960	3075	1282	2840	2925	1332
14.0	20	3763	3633	820	3502	3388	977	3520	3413	1158	3400	3300	1208	3160	3075	1295	3040	2963	1357
16.0	22	4024	3633	830	3726	3388	989	3760	3413	1170	3640	3300	1233	3400	3075	1320	3280	2963	1370
18.0	25	4285	3947	841	3949	3668	1000	4000	3713	1183	3840	3563	1233	3600	3338	1332	3440	3188	1382
19.0	27	4434	4157	852	4098	3842	1011	4160	3900	1195	4000	3750	1245	3760	3525	1332	3600	3375	1382
22.0	30	4918	4122	852	4545	3807	1011	4600	3863	1208	4440	3713	1257	4000	3600	1382	3720	3525	1457
24.0	32	5253	4122	863	4843	3807	1023	4920	3863	1208	4720	3713	1270	4160	3675	1419	3800	3638	1506

COOLING

[50Hz, 230V]

INDOOR	OUTDOOR TEMPERATURE (°CDB)																	
EDB	-10			-5			0			7			10			15		
°C	TC	SHC	PI	TC	SHC	PI	TC	SHC	PI	TC	SHC	PI	TC	SHC	PI	TC	SHC	PI
16	2850	0	1026	3515	0	1099	4280	0	1230	5055	0	1246	5515	0	1280	6365	0	1343
18	2825	0	1040	3480	0	1127	4235	0	1261	5030	0	1310	5495	0	1337	6340	0	1407
20	2800	0	1053	3450	0	1148	4200	0	1283	5000	0	1350	5375	0	1397	6300	0	1472
22	2775	0	1067	3400	0	1177	4155	0	1314	4970	0	1404	5435	0	1449	6270	0	1532
24	2750	0	1080	3370	0	1206	4120	0	1345	4940	0	1458	5405	0	1504	6180	0	1594

HEATING

RAM-55QH5

[50Hz, 230V]

INDOOR		OUTDOOR TEMPERATURE (°CDB)																	
EWB	EDB	21			27			32			35			40			43		
°C	°C	TC	SHC	PI	TC	SHC	PI	TC	SHC	PI	TC	SHC	PI	TC	SHC	PI	TC	SHC	PI
12.0	18	4061	3286	1015	4040	3261	1286	4428	3595	1651	4266	3437	1723	3996	3239	1849	3834	3081	1921
14.0	20	4363	3286	1015	4365	3295	1301	4752	3595	1669	4590	3476	1741	4266	3239	1867	4104	3121	1957
16.0	22	4666	3286	1028	4644	3295	1316	5076	3595	1687	4914	3476	1777	4590	3239	1903	4428	3121	1975
18.0	25	4968	3571	1042	4923	3567	1331	5400	3911	1705	5184	3753	1777	4860	3516	1921	4644	3358	1992
19.0	27	5141	3760	1055	5108	3737	1346	5616	4108	1723	5400	3950	1795	5076	3713	1921	4860	3555	1992
22.0	30	5702	3729	1055	5666	3703	1346	6210	4069	1741	5994	3911	1813	5400	3792	1992	5022	3713	2100
24.0	32	6091	3729	1068	6037	3703	1362	6642	4069	1741	6372	3911	1831	5616	3871	2046	5130	3832	2172

COOLING

[50Hz, 230V]

INDOOR	OUTDOOR TEMPERATURE (°CDB)																	
EDB	-10			-5			0			7			10			15		
°C	TC	SHC	PI	TC	SHC	PI	TC	SHC	PI	TC	SHC	PI	TC	SHC	PI	TC	SHC	PI
16	4104	0	1596	5062	0	1709	6163	0	1913	7279	0	1938	7545	0	1891	7332	0	1672
18	4068	0	1617	5011	0	1754	6098	0	1961	7243	0	2037	7517	0	1975	7304	0	1751
20	4032	0	1638	4968	0	1785	6048	0	1995	7200	0	2100	7353	0	2065	7258	0	1831
22	3996	0	1659	4896	0	1831	5983	0	2043	7157	0	2184	6261	0	1803	7223	0	1907
24	3960	0	1680	4853	0	1875	5933	0	2092	7114	0	2268	6227	0	1872	7119	0	1984

HEATING

RAM-65QH5

[50Hz, 230V]

INDOOR		OUTDOOR TEMPERATURE (°CDB)																	
EWB	EDB	21			27			32			35			40			43		
°C	°C	TC	SHC	PI	TC	SHC	PI	TC	SHC	PI	TC	SHC	PI	TC	SHC	PI	TC	SHC	PI
12.0	18	4738	3578	1128	4714	3550	1429	5166	3913	1835	4977	3741	1915	4662	3526	2055	4473	3354	2135
14.0	20	5090	3578	1128	5093	3587	1446	5544	3913	1855	5355	3784	1935	4977	3526	2075	4788	3397	2175
16.0	22	5443	3578	1143	5418	3587	1463	5922	3913	1875	5733	3784	1975	5355	3526	2115	5166	3397	2195
18.0	25	5796	3887	1158	5743	3883	1480	6300	4257	1895	6048	4085	1975	5670	3827	2135	5418	3655	2214
19.0	27	5998	4094	1173	5960	4068	1496	6552	4472	1915	6300	4300	1995	5922	4042	2135	5670	3870	2214
22.0	30	6653	4059	1173	6610	4031	1496	7245	4429	1935	6993	4257	2015	6300	4128	2214	5859	4042	2334
24.0	32	7106	4059	1187	7043	4031	1513	7749	4429	1935	7434	4257	2035	6552	4214	2274	5985	4171	2414

COOLING

[50Hz, 230V]

INDOOR	OUTDOOR TEMPERATURE (°CDB)																	
EDB	-10			-5			0			7			10			15		
°C	TC	SHC	PI	TC	SHC	PI	TC	SHC	PI	TC	SHC	PI	TC	SHC	PI	TC	SHC	PI
16	4104	0	1596	5062	0	1709	6163	0	1913	7279	0	1938	7545	0	1891	7332	0	1672
18	4068	0	1617	5011	0	1754	6098	0	1961	7243	0	2037	7517	0	1975	7304	0	1751
20	4032	0	1638	4968	0	1785	6048	0	1995	7200	0	2100	7353	0	2065	7258	0	1831
22	3996	0	1659	4896	0	1831	5983	0	2043	7157	0	2184	6261	0	1803	7223	0	1907
24	3960	0	1680	4853	0	1875	5933	0	2092	7114	0	2268	6227	0	1872	7119	0	1984

HEATING

RAM-72QH5

[50Hz, 230V]

INDOOR		OUTDOOR TEMPERATURE (°CDB)																	
EWB	EDB	21			27			32			35			40			43		
°C	°C	TC	SHC	PI	TC	SHC	PI	TC	SHC	PI	TC	SHC	PI	TC	SHC	PI	TC	SHC	PI
12.0	18	5895	3445	1336	5456	3180	1575	5822	3413	1969	5609	3263	2054	5254	3075	2204	5041	2925	2290
14.0	20	6334	3445	1336	5895	3213	1593	6248	3413	1990	6035	3300	2076	5609	3075	2226	5396	2963	2333
16.0	22	6773	3445	1354	6272	3213	1612	6674	3413	2012	6461	3300	2119	6035	3075	2268	5822	2963	2354
18.0	25	7212	3743	1371	6648	3478	1630	7100	3713	2033	6816	3563	2119	6390	3338	2290	6106	3188	2375
19.0	27	7463	3942	1389	6899	3644	1649	7384	3900	2054	7100	3750	2140	6674	3525	2290	6390	3375	2375
22.0	30	8279	3909	1389	7651	3611	1649	8165	3863	2076	7881	3713	2161	7100	3600	2375	6603	3525	2504
24.0	32	8843	3909	1406	8153	3611	1667	8733	3863	2076	8378	3713	2183	7384	3675	2440	6745	3638	2589

COOLING

[50Hz, 230V]

INDOOR	OUTDOOR TEMPERATURE (°CDB)																	
EDB	-10			-5			0			7			10			15		
°C	TC	SHC	PI	TC	SHC	PI	TC	SHC	PI	TC	SHC	PI	TC	SHC	PI	TC	SHC	PI
16	4902	0	1657	6046	0	1775	7362	0	1986	8695	0	2012	9486	0	2067	10948	0	2169
18	4859	0	1679	5986	0	1820	7284	0	2036	8652	0	2115	9451	0	2158	10905	0	2272
20	4816	0	1700	5934	0	1853	7224	0	2071	8600	0	2180	9245	0	2256	10836	0	2376
22	4773	0	1722	5848	0	1901	7147	0	2121	8548	0	2267	9348	0	2339	10784	0	2474
24	4730	0	1744	5796	0	1947	7086	0	2171	8497	0	2354	9297	0	2429	10630	0	2575

HEATING

RAM-80QH5

[50Hz, 230V]

INDOOR		OUTDOOR TEMPERATURE (°CDB)																	
EWB	EDB	21			27			32			35			40			43		
°C	°C	TC	SHC	PI	TC	SHC	PI	TC	SHC	PI	TC	SHC	PI	TC	SHC	PI	TC	SHC	PI
12.0	18	6643	3445	1655	6148	3180	1950	6560	3413	2438	6320	3263	2544	5920	3075	2730	5680	2925	2836
14.0	20	7137	3445	1655	6643	3213	1973	7040	3413	2465	6800	3300	2571	6320	3075	2756	6080	2963	2889
16.0	22	7632	3445	1676	7067	3213	1996	7520	3413	2491	7280	3300	2624	6800	3075	2809	6560	2963	2915
18.0	25	8127	3743	1698	7491	3478	2019	8000	3713	2518	7680	3563	2624	7200	3338	2836	6880	3188	2942
19.0	27	8409	3942	1720	7773	3644	2042	8320	3900	2544	8000	3750	2650	7520	3525	2836	7200	3375	2942
22.0	30	9328	3909	1720	8621	3611	2042	9200	3863	2571	8880	3713	2677	8000	3600	2942	7440	3525	3101
24.0	32	9964	3909	1742	9187	3611	2065	9840	3863	2571	9440	3713	2703	8320	3675	3021	7600	3638	3207

COOLING

[50Hz, 230V]

INDOOR	OUTDOOR TEMPERATURE (°CDB)																	
EDB	-10			-5			0			7			10			15		
°C	TC	SHC	PI	TC	SHC	PI	TC	SHC	PI	TC	SHC	PI	TC	SHC	PI	TC	SHC	PI
16	6270	0	1999	7733	0	2141	9416	0	2396	11121	0	2427	12133	0	2493	14003	0	2617
18	6215	0	2025	7656	0	2196	9317	0	2456	11066	0	2551	12089	0	2604	13948	0	2740
20	6160	0	2051	7590	0	2236	9240	0	2499	11000	0	2630	11825	0	2722	13860	0	2867
22	6105	0	2078	7480	0	2293	9141	0	2559	10934	0	2735	11957	0	2822	13794	0	2985
24	6050	0	2104	7414	0	2349	9064	0	2619	10868	0	2840	11891	0	2930	13596	0	3106

HEATING

RAS-18YH5/RAC-18YH5

[50Hz, 230V]

INDOOR		OUTDOOR TEMPERATURE (°CDW)																	
EWB	EDB	21			27			32			35			40			43		
°C	°C	TC	SHC	PI	TC	SHC	PI	TC	SHC	PI	TC	SHC	PI	TC	SHC	PI	TC	SHC	PI
12.0	18	1880	3900	433	1740	3600	485	1640	3413	524	1580	3263	547	1480	3075	587	1420	2925	610
14.0	20	2020	3900	433	1880	3638	490	1760	3413	530	1700	3300	553	1580	3075	593	1520	2963	621
16.0	22	2160	3900	408	2000	3638	496	1880	3413	536	1820	3300	564	1700	3075	604	1640	2963	627
18.0	25	2300	4238	445	2120	3938	502	2000	3713	542	1920	3563	564	1800	3338	610	1720	3188	633
19.0	27	2380	4463	450	2200	4125	507	2080	3900	547	2000	3750	570	1880	3525	610	1800	3375	633
22.0	30	2640	4425	450	2440	4088	507	2300	3863	553	2220	3713	576	2000	3600	633	1860	3525	667
24.0	32	2820	4425	456	2600	4088	513	2460	3863	553	2360	3713	581	2080	3675	650	1900	3638	690

COOLING

[50Hz, 230V]

INDOOR	OUTDOOR TEMPERATURE (°CDW)																	
EDB	-10			-5			0			7			10			15		
°C	TC	SHC	PI	TC	SHC	PI	TC	SHC	PI	TC	SHC	PI	TC	SHC	PI	TC	SHC	PI
16	1425	0	479	1758	0	513	2140	0	574	2528	0	581	2758	0	597	3183	0	627
18	1413	0	485	1740	0	526	2118	0	588	2515	0	611	2748	0	624	3170	0	656
20	1400	0	491	1725	0	536	2100	0	599	2500	0	630	2688	0	652	3150	0	687
22	1388	0	498	1700	0	549	2078	0	613	2485	0	655	2718	0	676	3135	0	715
24	1375	0	504	1685	0	563	2060	0	627	2470	0	680	2703	0	702	3090	0	744

HEATING

RAS-25YH5/RAC-25YH5

[50Hz, 230V]

INDOOR		OUTDOOR TEMPERATURE (°CDB)																	
EWB	EDB	21			27			32			35			40			43		
°C	°C	TC	SHC	PI	TC	SHC	PI	TC	SHC	PI	TC	SHC	PI	TC	SHC	PI	TC	SHC	PI
12.0	18	2350	2080	441	2175	1920	493	2050	1820	534	1975	1740	557	1850	1640	597	1775	1560	621
14.0	20	2525	2080	441	2350	1940	499	2200	1820	539	2125	1760	563	1975	1640	603	1900	1580	632
16.0	22	2700	2080	447	2500	1940	505	2350	1820	545	2275	1760	574	2125	1640	615	2050	1580	638
18.0	25	2875	2260	452	2650	2100	510	2500	1980	551	2400	1900	574	2250	1780	621	2150	1700	644
19.0	27	2975	2380	458	2750	2200	516	2600	2080	557	2500	2000	580	2350	1880	621	2250	1800	644
22.0	30	3300	2360	458	3050	2180	516	2875	2060	563	2775	1980	586	2500	1920	644	2325	1880	679
24.0	32	3525	2360	464	3250	2180	522	3075	2060	563	2950	1980	592	2600	1960	661	2375	1940	702

COOLING

[50Hz, 230V]

INDOOR	OUTDOOR TEMPERATURE (°CDB)																	
EDB	-10			-5			0			7			10			15		
°C	TC	SHC	PI	TC	SHC	PI	TC	SHC	PI	TC	SHC	PI	TC	SHC	PI	TC	SHC	PI
16	1938	0	600	2390	0	643	2910	0	720	3437	0	729	3750	0	749	4328	0	786
18	1921	0	608	2366	0	660	2880	0	738	3420	0	766	3737	0	782	4311	0	823
20	1904	0	616	2346	0	672	2856	0	751	3400	0	790	3655	0	818	4284	0	861
22	1887	0	624	2312	0	689	2825	0	769	3380	0	822	3696	0	848	4264	0	897
24	1870	0	632	2292	0	705	2802	0	787	3359	0	853	3675	0	880	4202	0	933

HEATING

RAS-35YH5/RAC-35YH5

[50Hz, 230V]

INDOOR		OUTDOOR TEMPERATURE (°CDB)																	
EWB	EDB	21			27			32			35			40			43		
°C	°C	TC	SHC	PI	TC	SHC	PI	TC	SHC	PI	TC	SHC	PI	TC	SHC	PI	TC	SHC	PI
12.0	18	3133	2872	660	2900	2651	777	2870	2639	902	2765	2523	941	2590	2378	1009	2485	2262	1049
14.0	20	3367	2872	660	3133	2679	787	3080	2639	911	2975	2552	951	2765	2378	1019	2660	2291	1068
16.0	22	3600	2872	668	3333	2679	796	3290	2639	921	3185	2552	970	2975	2378	1039	2870	2291	1078
18.0	25	3833	3121	677	3533	2900	805	3500	2871	931	3360	2755	970	3150	2581	1049	3010	2465	1088
19.0	27	3967	3287	686	3667	3038	814	3640	3016	941	3500	2900	980	3290	2726	1049	3150	2610	1088
22.0	30	4400	3259	686	4067	3010	814	4025	2987	951	3885	2871	990	3500	2784	1088	3255	2726	1147
24.0	32	4700	3259	694	4333	3010	823	4305	2987	951	4130	2871	1000	3640	2842	1117	3325	2813	1186

COOLING

[50Hz, 230V]

INDOOR	OUTDOOR TEMPERATURE (°CDB)																	
EDB	-10			-5			0			7			10			15		
°C	TC	SHC	PI	TC	SHC	PI	TC	SHC	PI	TC	SHC	PI	TC	SHC	PI	TC	SHC	PI
16	2394	0	768	2953	0	822	3595	0	920	4246	0	932	4633	0	957	5347	0	1005
18	2373	0	778	2923	0	843	3557	0	943	4225	0	980	4616	0	1000	5326	0	1052
20	2352	0	788	2898	0	859	3528	0	960	4200	0	1010	4515	0	1045	5292	0	1101
22	2331	0	798	2856	0	881	3490	0	983	4175	0	1050	4565	0	1084	5267	0	1146
24	2310	0	808	2831	0	902	3461	0	1006	4150	0	1091	4540	0	1125	5191	0	1193

HEATING

RAS-50YH5/RAC-50YH5

[50Hz, 230V]

INDOOR		OUTDOOR TEMPERATURE (°CDB)																	
EWB	EDB	21			27			32			35			40			43		
°C	°C	TC	SHC	PI	TC	SHC	PI	TC	SHC	PI	TC	SHC	PI	TC	SHC	PI	TC	SHC	PI
12.0	18	3240	2688	867	2999	2482	1022	4100	3413	1638	3950	3263	1709	3700	3075	1833	3550	2925	1905
14.0	20	3481	2688	867	3240	2507	1034	4400	3413	1655	4250	3300	1727	3950	3075	1851	3800	2963	1940
16.0	22	3722	2688	879	3447	2507	1046	4700	3413	1673	4550	3300	1762	4250	3075	1887	4100	2963	1958
18.0	25	3964	2921	890	3653	2714	1058	5000	3713	1691	4800	3563	1762	4500	3338	1905	4300	3188	1976
19.0	27	4101	3076	901	3791	2843	1070	5200	3900	1709	5000	3750	1780	4700	3525	1905	4500	3375	1976
22.0	30	4550	3050	901	4205	2818	1070	5750	3863	1727	5550	3713	1798	5000	3600	1976	4650	3525	2083
24.0	32	4860	3050	913	4481	2818	1082	6150	3863	1727	5900	3713	1816	5200	3675	2029	4750	3638	2154

COOLING

[50Hz, 230V]

INDOOR	OUTDOOR TEMPERATURE (°CDB)																	
EDB	-10			-5			0			7			10			15		
°C	TC	SHC	PI	TC	SHC	PI	TC	SHC	PI	TC	SHC	PI	TC	SHC	PI	TC	SHC	PI
16	3705	0	1497	4570	0	1604	5564	0	1795	6572	0	1818	7170	0	1868	8275	0	1960
18	3673	0	1517	4524	0	1645	5506	0	1840	6539	0	1911	7144	0	1950	8242	0	2053
20	3640	0	1537	4485	0	1675	5460	0	1872	6500	0	1970	6988	0	2039	8190	0	2147
22	3608	0	1556	4420	0	1718	5402	0	1917	6461	0	2049	7066	0	2114	8151	0	2236
24	3575	0	1576	4381	0	1759	5356	0	1962	6422	0	2128	7027	0	2195	8034	0	2327

HEATING

RAS-60YH5/RAC-60YH5

[50Hz, 230V]

INDOOR		OUTDOOR TEMPERATURE (°CDB)																	
EWB	EDB	21			27			32			35			40			43		
°C	°C	TC	SHC	PI	TC	SHC	PI	TC	SHC	PI	TC	SHC	PI	TC	SHC	PI	TC	SHC	PI
12.0	18	4423	3802	1264	4094	3509	1490	4961	4277	2116	4780	4089	2208	4477	3854	2369	4296	3666	2461
14.0	20	4753	3802	1264	4423	3546	1508	5324	4277	2139	5143	4136	2231	4780	3854	2392	4598	3713	2507
16.0	22	5082	3802	1281	4706	3546	1525	5687	4277	2162	5506	4136	2277	5143	3854	2438	4961	3713	2530
18.0	25	5411	4131	1298	4988	3838	1543	6050	4653	2185	5808	4465	2277	5445	4183	2461	5203	3995	2553
19.0	27	5600	4350	1314	5176	4021	1560	6292	4888	2208	6050	4700	2300	5687	4418	2461	5445	4230	2553
22.0	30	6211	4314	1314	5741	3985	1560	6958	4841	2231	6716	4653	2323	6050	4512	2553	5627	4418	2691
24.0	32	6635	4314	1331	6117	3985	1578	7442	4841	2231	7139	4653	2346	6292	4606	2622	5748	4559	2783

COOLING

[50Hz, 230V]

INDOOR	OUTDOOR TEMPERATURE (°CDB)																	
EDB	-10			-5			0			7			10			15		
°C	TC	SHC	PI	TC	SHC	PI	TC	SHC	PI	TC	SHC	PI	TC	SHC	PI	TC	SHC	PI
16	4019	0	1824	4956	0	1954	6035	0	2186	7128	0	2215	7776	0	2275	8975	0	2388
18	3983	0	1848	4907	0	2004	5971	0	2242	7092	0	2328	7748	0	2376	8939	0	2501
20	3948	0	1872	4865	0	2040	5922	0	2280	7050	0	2400	7579	0	2484	8883	0	2616
22	3913	0	1896	4794	0	2093	5859	0	2335	7008	0	2496	7663	0	2575	8841	0	2724
24	3878	0	1920	4752	0	2143	5809	0	2390	6965	0	2592	7621	0	2674	8714	0	2834

HEATING

RAS-70YH5/RAC-70YH5

[50Hz, 230V]

INDOOR		OUTDOOR TEMPERATURE (°CDB)																	
EWB	EDB	21			27			32			35			40			43		
°C	°C	TC	SHC	PI	TC	SHC	PI	TC	SHC	PI	TC	SHC	PI	TC	SHC	PI	TC	SHC	PI
12.0	18	5922	4998	1698	5481	4614	2002	5740	4859	2456	5530	4646	2563	5180	4378.8	2750	4970	4165.2	2857
14.0	20	6363	4998	1698	5922	4662	2025	6160	4859	2483	5950	4699	2590	5530	4378.8	2777	5320	4219	2910
16.0	22	6804	4998	1721	6300	4662	2049	6580	4859	2510	6370	4699	2643	5950	4378.8	2830	5740	4219	2937
18.0	25	7245	5431	1743	6678	5046	2072	7000	5287	2537	6720	5073	2643	6300	4753	2857	6020	4539	2964
19.0	27	7497	5719	1765	6930	5287	2096	7280	5554	2563	7000	5340	2670	6580	5019.6	2857	6300	4806	2964
22.0	30	8316	5671	1765	7686	5239	2096	8050	5500	2590	7770	5287	2697	7000	5126.4	2964	6510	5019.6	3124
24.0	32	8883	5671	1788	8190	5239	2119	8610	5500	2590	8260	5287	2723	7280	5233.2	3044	6650	5180	3231

COOLING

[50Hz, 230V]

INDOOR	OUTDOOR TEMPERATURE (°CDB)																	
EDB	-10			-5			0			7			10			15		
°C	TC	SHC	PI	TC	SHC	PI	TC	SHC	PI	TC	SHC	PI	TC	SHC	PI	TC	SHC	PI
16	4674	0	2105	5765	0	2255	7019	0	2523	8290	0	2557	9045	0	2626	10439	0	2756
18	4633	0	2133	5707	0	2313	6945	0	2587	8249	0	2687	9012	0	2742	10398	0	2886
20	4592	0	2161	5658	0	2355	6888	0	2632	8200	0	2770	8815	0	2867	10332	0	3019
22	4551	0	2188	5576	0	2415	6814	0	2695	8151	0	2881	8913	0	2972	10283	0	3144
24	4510	0	2216	5527	0	2474	6757	0	2759	8102	0	2992	8864	0	3086	10135	0	3271

HEATING

RAS-80YH5/RAC-80YH5

[50Hz, 230V]

INDOOR		OUTDOOR TEMPERATURE (°CDB)																	
EWB	EDB	21			27			32			35			40			43		
°C	°C	TC	SHC	PI	TC	SHC	PI	TC	SHC	PI	TC	SHC	PI	TC	SHC	PI	TC	SHC	PI
12.0	18	6768	5616	1953	6264	5184	2302	6560	5460	2824	6320	5220	2947	5920	4920	3162	5680	4680	3285
14.0	20	7272	5616	1953	6768	5238	2329	7040	5460	2855	6800	5280	2978	6320	4920	3193	6080	4740	3346
16.0	22	7776	5616	1979	7200	5238	2356	7520	5460	2886	7280	5280	3039	6800	4920	3254	6560	4740	3377
18.0	25	8280	6102	2004	7632	5670	2383	8000	5940	2917	7680	5700	3039	7200	5340	3285	6880	5100	3408
19.0	27	8568	6426	2030	7920	5940	2410	8320	6240	2947	8000	6000	3070	7520	5640	3285	7200	5400	3408
22.0	30	9504	6372	2030	8784	5886	2410	9200	6180	2978	8880	5940	3101	8000	5760	3408	7440	5640	3592
24.0	32	10152	6372	2056	9360	5886	2437	9840	6180	2978	9440	5940	3131	8320	5880	3500	7600	5820	3715

COOLING

[50Hz, 230V]

INDOOR	OUTDOOR TEMPERATURE (°CDB)																	
EDB	-10			-5			0			7			10			15		
°C	TC	SHC	PI	TC	SHC	PI	TC	SHC	PI	TC	SHC	PI	TC	SHC	PI	TC	SHC	PI
16	5301	0	2356	6538	0	2523	7961	0	2824	9402	0	2861	10258	0	2939	11839	0	3085
18	5255	0	2387	6473	0	2589	7877	0	2895	9356	0	3007	10221	0	3069	11792	0	3230
20	5208	0	2418	6417	0	2635	7812	0	2945	9300	0	3100	9998	0	3209	11718	0	3379
22	5162	0	2449	6324	0	2703	7728	0	3016	9244	0	3224	10109	0	3326	11662	0	3519
24	5115	0	2480	6268	0	2768	7663	0	3088	9188	0	3348	10053	0	3453	11495	0	3661

HEATING

RAS-07G4/RAC-07G4

[50Hz, 230V]

INDOOR		OUTDOOR TEMPERATURE (°CDB)																	
EWB	EDB	21			27			32			35			40			43		
°C	°C	TC	SHC	PI	TC	SHC	PI	TC	SHC	PI	TC	SHC	PI	TC	SHC	PI	TC	SHC	PI
12.0	18	1974	1976	464	1827	1824	519	1722	1729	561	1659	1653	586	1554	1558	628	1491	1482	653
14.0	20	2121	1976	464	1974	1843	525	1848	1729	567	1785	1672	592	1659	1558	634	1596	1501	665
16.0	22	2268	1976	470	2100	1843	531	1974	1729	573	1911	1672	604	1785	1558	647	1722	1501	671
18.0	25	2415	2147	476	2226	1995	537	2100	1881	580	2016	1805	604	1890	1691	653	1806	1615	677
19.0	27	2499	2261	482	2310	2090	543	2184	1976	586	2100	1900	610	1974	1786	653	1890	1710	677
22.0	30	2772	2242	482	2562	2071	543	2415	1957	592	2331	1881	616	2100	1824	677	1953	1786	714
24.0	32	2961	2242	488	2730	2071	549	2583	1957	592	2478	1881	622	2184	1862	695	1995	1843	738

*COOLING

RAS-07GH4/RAC-07GH4

[50Hz, 230V]

INDOOR	OUTDOOR TEMPERATURE (°CDB)																	
EDB	-10			-5			0			7			10			15		
°C	TC	SHC	PI	TC	SHC	PI	TC	SHC	PI	TC	SHC	PI	TC	SHC	PI	TC	SHC	PI
16	1254	0	388	1547	0	415	1883	0	465	2224	0	471	2427	0	483	2801	0	507
18	1243	0	393	1531	0	426	1863	0	476	2213	0	495	2418	0	505	2790	0	531
20	1232	0	398	1518	0	434	1848	0	485	2200	0	510	2365	0	528	2772	0	556
22	1221	0	403	1496	0	445	1828	0	496	2187	0	530	2391	0	547	2759	0	579
24	1210	0	408	1483	0	455	1813	0	508	2174	0	551	2378	0	568	2719	0	602

*COOLING REFER TO RAS-07G4/RAC-07G4
HEATING

RAS-09G4/RAC-09G4

[50Hz, 230V]

INDOOR		OUTDOOR TEMPERATURE (°CDB)																	
EWB	EDB	21			27			32			35			40			43		
°C	°C	TC	SHC	PI	TC	SHC	PI	TC	SHC	PI	TC	SHC	PI	TC	SHC	PI	TC	SHC	PI
12.0	18	2726	2392	684	2523	2208	765	2378	2093	828	2291	2001	864	2146	1886	927	2059	1794	963
14.0	20	2929	2392	684	2726	2231	774	2552	2093	837	2465	2024	873	2291	1886	936	2204	1817	981
16.0	22	3132	2392	693	2900	2231	783	2726	2093	846	2639	2024	891	2465	1886	954	2378	1817	990
18.0	25	3335	2599	702	3074	2415	792	2900	2277	855	2784	2185	891	2610	2047	963	2494	1955	999
19.0	27	3451	2737	711	3190	2530	801	3016	2392	864	2900	2300	900	2726	2162	963	2610	2070	999
22.0	30	3828	2714	711	3538	2507	801	3335	2369	873	3219	2277	909	2900	2208	999	2697	2162	1053
24.0	32	4089	2714	720	3770	2507	810	3567	2369	873	3422	2277	918	3016	2254	1026	2755	2231	1089

*COOLING

RAS-09GH4/RAC-09GH4

[50Hz, 230V]

INDOOR	OUTDOOR TEMPERATURE (°CDB)																	
EDB	-10			-5			0			7			10			15		
°C	TC	SHC	PI	TC	SHC	PI	TC	SHC	PI	TC	SHC	PI	TC	SHC	PI	TC	SHC	PI
16	1254	0	388	1547	0	415	1883	0	465	2224	0	471	2427	0	483	2801	0	507
18	1243	0	393	1531	0	426	1863	0	476	2213	0	495	2418	0	505	2790	0	531
20	1232	0	398	1518	0	434	1848	0	485	2200	0	510	2365	0	528	2772	0	556
22	1221	0	403	1496	0	445	1828	0	496	2187	0	530	2391	0	547	2759	0	579
24	1210	0	408	1483	0	455	1813	0	508	2174	0	551	2378	0	568	2719	0	602

*COOLING REFER TO RAS-09G4/RAC-09G4
HEATING

RAS-14G4/RAC-14G4

[50Hz, 230V]

INDOOR		OUTDOOR TEMPERATURE (°CDB)																	
EWB	EDB	21			27			32			35			40			43		
°C	°C	TC	SHC	PI	TC	SHC	PI	TC	SHC	PI	TC	SHC	PI	TC	SHC	PI	TC	SHC	PI
12.0	18	3290	2912	828	3045	2688	927	2870	2548	1003	2765	2436	1046	2590	2296	1123	2485	2184	1166
14.0	20	3535	2912	828	3290	2716	937	3080	2548	1014	2975	2464	1057	2765	2296	1134	2660	2212	1188
16.0	22	3780	2912	839	3500	2716	948	3290	2548	1025	3185	2464	1079	2975	2296	1155	2870	2212	1199
18.0	25	4025	3164	850	3710	2940	959	3500	2772	1036	3360	2660	1079	3150	2492	1166	3010	2380	1210
19.0	27	4165	3332	861	3850	3080	970	3640	2912	1046	3500	2800	1090	3290	2632	1166	3150	2520	1210
22.0	30	4620	3304	861	4270	3052	970	4025	2884	1057	3885	2772	1101	3500	2688	1210	3255	2632	1275
24.0	32	4935	3304	872	4550	3052	981	4305	2884	1057	4130	2772	1112	3640	2744	1243	3325	2716	1319

*COOLING

RAS-14GH4/RAC-14GH4

[50Hz, 230V]

INDOOR	OUTDOOR TEMPERATURE (°CDB)																	
EDB	-10			-5			0			7			10			15		
°C	TC	SHC	PI	TC	SHC	PI	TC	SHC	PI	TC	SHC	PI	TC	SHC	PI	TC	SHC	PI
16	1710	0	585	2109	0	627	2568	0	701	3033	0	711	3309	0	730	3819	0	766
18	1695	0	593	2088	0	643	2541	0	719	3018	0	747	3297	0	762	3804	0	802
20	1680	0	601	2070	0	655	2520	0	732	3000	0	770	3225	0	797	3780	0	839
22	1665	0	608	2040	0	671	2493	0	749	2982	0	801	3261	0	826	3762	0	874
24	1650	0	616	2022	0	688	2472	0	767	2964	0	832	3243	0	858	3708	0	909

*COOLING REFER TO RAS-14G4/RAC-14G4
HEATING

RAS-18G4/RAC-18G4

[50Hz, 230V]

INDOOR		OUTDOOR TEMPERATURE (°CDB)																	
EWB	EDB	21			27			32			35			40			43		
°C	°C	TC	SHC	PI	TC	SHC	PI	TC	SHC	PI	TC	SHC	PI	TC	SHC	PI	TC	SHC	PI
12.0	18	4794	3744	1201	4437	3456	1343	4182	3276	1454	4029	3132	1517	3774	2952	1627	3621	2808	1691
14.0	20	5151	3744	1201	4794	3492	1359	4488	3276	1469	4335	3168	1533	4029	2952	1643	3876	2844	1722
16.0	22	5508	3744	1217	5100	3492	1375	4794	3276	1485	4641	3168	1564	4335	2952	1675	4182	2844	1738
18.0	25	5865	4068	1232	5406	3780	1390	5100	3564	1501	4896	3420	1564	4590	3204	1691	4386	3060	1754
19.0	27	6069	4284	1248	5610	3960	1406	5304	3744	1517	5100	3600	1580	4794	3384	1691	4590	3240	1754
22.0	30	6732	4248	1248	6222	3924	1406	5865	3708	1533	5661	3564	1596	5100	3456	1754	4743	3384	1849
24.0	32	7191	4248	1264	6630	3924	1422	6273	3708	1533	6018	3564	1612	5304	3528	1801	4845	3492	1912

*COOLING

RAS-18GH4/RAC-18GH4

[50Hz, 230V]

INDOOR	OUTDOOR TEMPERATURE (°CDB)																	
EDB	-10			-5			0			7			10			15		
°C	TC	SHC	PI	TC	SHC	PI	TC	SHC	PI	TC	SHC	PI	TC	SHC	PI	TC	SHC	PI
16	3278	0	1277	4042	0	1368	4922	0	1530	5813	0	1551	6342	0	1593	7320	0	1672
18	3249	0	1294	4002	0	1403	4870	0	1569	5785	0	1630	6319	0	1663	7291	0	1751
20	3220	0	1310	3968	0	1428	4830	0	1596	5750	0	1680	6181	0	1739	7245	0	1831
22	3191	0	1327	3910	0	1465	4778	0	1635	5716	0	1747	6250	0	1803	7211	0	1907
24	3163	0	1344	3876	0	1500	4738	0	1673	5681	0	1814	6216	0	1872	7107	0	1984

*COOLING REFER TO RAS-18G4/RAC-18G4
HEATING

RAS-24G4/RAC-24G4

[50Hz, 230V]

INDOOR		OUTDOOR TEMPERATURE (°CDB)																	
EWB	EDB	21			27			32			35			40			43		
°C	°C	TC	SHC	PI	TC	SHC	PI	TC	SHC	PI	TC	SHC	PI	TC	SHC	PI	TC	SHC	PI
12.0	18	6110	4680	1892	5655	4320	2117	5330	4095	2291	5135	3915	2390	4810	3690	2565	4615	3510	2664
14.0	20	6565	4680	1892	6110	4365	2141	5720	4095	2316	5525	3960	2415	5135	3690	2590	4940	3555	2714
16.0	22	7020	4680	1917	6500	4365	2166	6110	4095	2341	5915	3960	2465	5525	3690	2639	5330	3555	2739
18.0	25	7475	5085	1942	6890	4725	2191	6500	4455	2366	6240	4275	2465	5850	4005	2664	5590	3825	2764
19.0	27	7735	5355	1967	7150	4950	2216	6760	4680	2390	6500	4500	2490	6110	4230	2664	5850	4050	2764
22.0	30	8580	5310	1967	7930	4905	2216	7475	4635	2415	7215	4455	2515	6500	4320	2764	6045	4230	2913
24.0	32	9165	5310	1992	8450	4905	2241	7995	4635	2415	7670	4455	2540	6760	4410	2839	6175	4365	3013

*COOLING

RAS-24GH4/RAC-24GH4

[50Hz, 230V]

INDOOR	OUTDOOR TEMPERATURE (°CDB)																	
EDB	-10			-5			0			7			10			15		
°C	TC	SHC	PI	TC	SHC	PI	TC	SHC	PI	TC	SHC	PI	TC	SHC	PI	TC	SHC	PI
16	4332	0	2022	5343	0	2165	6506	0	2423	7684	0	2455	8383	0	2522	9675	0	2647
18	4294	0	2048	5290	0	2221	6437	0	2484	7646	0	2580	8352	0	2633	9637	0	2772
20	4256	0	2075	5244	0	2261	6384	0	2527	7600	0	2660	8170	0	2753	9576	0	2899
22	4218	0	2101	5168	0	2320	6316	0	2588	7554	0	2766	8261	0	2854	9530	0	3019
24	4180	0	2128	5122	0	2375	6262	0	2649	7509	0	2873	8216	0	2963	9394	0	3141

*COOLING REFER TO RAS-24G4/RAC-24G4
HEATING

EWB: Evaporator Wet Bulb temperature (^{o}C)
EDB: Evaporator Dry Bulb temperature (^{o}C)
(^{o}CDB): Outdoor Unit Inlet Air Dry Bulb Temperature (^{o}C)
TC: Total Cooling Capacity (W)
SHC: Sensible Heat Capacity (W)
Pi Total Power Input (W)

4.6. COMBINATION TABLE FOR MONOZONE OUTDOOR

4.6.1. RAC-25/35/50/65NH5

		Cooling					Heating				
	Combination of indoor units	Room 1 capacity (kW)	Total capacity (kW)	Total input (W)	Total current (A)	EER	Room 1 capacity (kW)	Total capacity (kW)	Total input (W)	Total current (A)	COP
RAC-25NH5	RAK-25NH5	2.5	2.5 (0.9-3.0)	695 (155-1050)	3.10	3.60	3.5	3.5 (0.9-5.0)	900 (115-1400)	4.00	3.89
	RAF-25NH5	2.5	2.5 (0.9-3.0)	695 (155-1050)	3.10	3.60	3.5	3.5 (0.9-5.0)	900 (115-1400)	4.00	3.89
	RAI-25NH5	2.5	2.5 (0.9-3.0)	695 (155-1050)	3.10	3.60	3.5	3.5 (0.9-5.0)	940 (155-1400)	4.15	3.72
	RAD-25NH5	2.5	2.5 (0.9-3.0)	695 (155-1050)	3.10	3.60	3.5	3.5 (0.9-5.0)	970 (155-1400)	4.30	3.61
RAC-35NH5	RAK-35NH5	3.5	3.5 (0.9-4.0)	1080 (155-1280)	4.75	3.24	4.8	4.8 (0.9-6.6)	1320 (115-1920)	5.85	3.64
	RAF-35NH5	3.5	3.5 (0.9-4.0)	1080 (155-1280)	4.75	3.24	4.8	4.8 (0.9-6.6)	1320 (115-1920)	5.85	3.64
	RAI-35NH5	3.5	3.5 (0.9-4.0)	1100 (155-1280)	4.85	3.18	4.8	4.8 (0.9-6.6)	1360 (155-1920)	6.00	3.53
	RAD-35NH5	3.5	3.5 (0.9-4.0)	1240 (155-1280)	5.45	2.82	4.8	4.8 (0.9-6.6)	1700 (155-1920)	7.55	2.82
RAC-50NH5	RAK-50NH5	5.0	5.0 (0.9-5.2)	1780 (155-2230)	7.80	2.81	6.5	6.5 (0.9-8.1)	1970 (115-2700)	8.75	3.30
	RAF-50NH5	5.0	5.0 (0.9-5.2)	1780 (155-2230)	7.80	2.81	6.7	6.7 (0.9-8.1)	1850 (115-2700)	8.20	3.62
	RAI-50NH5	5.0	5.0 (0.9-5.2)	1990 (155-2200)	8.70	2.51	6.5	6.5 (0.9-8.1)	2160 (155-2700)	9.60	3.01
RAC-65NH5	RAK-65NH5	6.05	6.05 (0.9-6.5)	2300 (155-2500)	10.10	2.63	7.05	7.05 (0.9-9.0)	2400 (115-2700)	10.5	2.94

4.7. COMBINATION TABLE FOR MULTIZONE OUTDOOR

4.7.1. RAM-40QH5

Whichever indoor units are installed, cooling and heating capacity depends on how many and which indoor units are operating at the same time.

Possible combinations to operate		Cooling			Heating		
		Capacity rating (kW)	Outdoor unit		Capacity rating (kW)	Outdoor unit	
			Power consumption (W)	Total ampere (A) 230V		Power consumption (W)	Total ampere (A) 230V
One unit	1.8	1.80 (1.00-2.50)	560 (200-750)	2.6	2.50 (1.10-3.20)	690 (200-970)	3.0
	2.5	2.50 (1.00-3.10)	750 (200-880)	3.3	3.40 (1.10-4.40)	870 (200-1,120)	3.8
	3.5	3.50 (1.00-4.00)	1,090 (200-1,300)	4.8	4.20 (1.10-5.00)	1,080 (200-1,300)	4.7
Two units	1.8 + 1.8	3.60 (1.50-4.00)	1,190 (200-1,680)	5.6	4.50 (1.50-5.20)	1100 (200-1,480)	4.8
	1.8 + 2.5	4.00 (1.50-4.50)	1,245 (200-1,720)	7.0	4.80 (1.50-5.40)	1,240 (200-1,750)	5.4
	2.5 + 2.5	4.00 (1.50-4.50)	1,245 (200-1,800)	7.0	5.00 (1.50-5.60)	1,350 (200-1,780)	5.9
	1.8 + 3.5	4.00 (1.50-4.50)	1,245 (200-1,800)	7.0	5.00 (1.50-5.60)	1,350 (200-1,780)	5.9
	2.5 + 3.5	4.00 (1.50-4.50)	1,245 (200-1,800)	7.0	5.00 (1.50-5.60	1,350 (200-1,780)	5.9

Indoor unit model	Nominal cooling capacity (kW)	Capacity (kW) at single unit operation		Suitable room size (m^2) At single unit operation	
		Cooling	Heating	Cooling	Heating
RAK-18NH5	1.8	1.00-2.50	1.10-3.20	-	-
RAK-25NH5	2.5	1.00-3.10	1.10-4.40	11-17	14-18
RAK-35NH5	3.5	1.00-4.00	1.10-5.00	16-24	17-22
RAK-50NH5	5.0	1.00-5.60	1.10-7.20	23-34	23-29
RAI-25NH5	2.5	1.00-3.10	1.10-4.40	11-17	14-18
RAI-35NH5	3.5	1.00-4.00	1.10-5.00	18-28	22-27
RAI-50NH5	5.0	1.00-5.60	1.10-7.20	23-34	23-29
RAD-25NH5	2.5	1.00-3.10	1.10-4.40	11-17	14-18
RAD-35NH5	3.5	1.00-4.00	1.10-5.00	18-28	22-27
RAF-25NH5	2.5	1.00-3.10	1.10-4.40	11-17	14-18
RAF-35NH5	3.5	1.00-4.00	1.10-5.00	16-24	17-22
RAF-50NH5	5.0	1.00-5.60	1.10-7.20	23-34	23-29

Two units must be connected to the outdoor unit to avoid water condensation and result in water splash.
One-unit values are for one unit operation with two indoor connected.
Total nominal cooling capacity should not be more than 6.0kW.

4.7.2. RAM-55QH5

Whichever indoor units are installed, cooling and heating capacity depends on how many and which indoor units are operating at the same time.

Possible combinations to operate		Cooling			Heating		
		Capacity rating (kW)	Outdoor unit		Capacity rating (kW)	Outdoor unit	
			Power consumption (W)	Total ampere (A) 230V		Power consumption (W)	Total ampere (A) 230V
One unit	1.8	1.80 (1.00-2.50)	560 (200-750)	2.5	2.50 (1.10-3.20)	750 (200-1,050)	3.3
	2.5	2.50 (1.00-2.80)	780 (200-980)	3.4	3.90 (1.10-4.70)	1,145 (200-1,380)	5.0
	3.5	3.50 (1.00-3.90)	1,160 (200-1,280)	5.1	4.80 (1.10-5.80)	1,150 (200-1,870)	6.8
	5.0	5.00 (1.00-5.60)	1,780 (200-1,960)	7.8	6.50 (1.10-7.20)	2,400 (200-2,660)	10.5
Two units	1.8 + 1.8	1.80 + 1.80 (1.50-4.00)	1,190 (200-1300)	5.2	2.50+2.50 (1.50-5.20)	1460 (200-1550)	6.4
	1.8 + 2.5	1.80 + 2.40 (1.50-4.60)	1310 (200-1450)	5.8	2.40+3.80 (1.50-6.30)	1820 (200-1920)	8.0
	1.8 + 3.5	1.70 + 3.30 (1.50-5.60)	1,650 (200-1,820)	7.2	2.30+4.50 (1.50-7.20)	1995 (200-2100)	8.8
	1.8 + 5.0	1.40+4.00 (1.50-5.70)	1,795 (200-1,980)	7.9	2.00+5.00 (1.50-7.20)	2050 (200-2100)	9.0
	2.5 + 2.5	2.50+2.50 (1.50-5.60)	1,650 (200-1,820)	7.2	3.40+3.40 (1.50-7.20)	2015 (200-2110)	8.8
	2.5 + 3.5	2.17+3.03 (1.50-5.70)	1,730 (200-1,900)	7.6	3.15+3.85 (1.50-7.20)	2070 (200-2110)	9.1
	3.5 + 3.5	2.70+2.70 (1.50-5.90)	1,795 (200-1,980)	7.9	3.60+3.60 (1.50-7.20)	2110 (200-2110)	9.3
	2.5 + 5.0	1.80+3.60 (1.50-5.90)	1,795 (200-1,980)	7.9	2.70+4.50 (1.50+7.20)	2110 (200-2110)	9.3

Indoor unit model	Nominal cooling capacity (kW)	Capacity (kW) at single unit operation		Suitable room size (m^2) At single unit operation	
		Cooling	Heating	Cooling	Heating
RAK-18NH5	1.8	1.00-2.50	1.10-3.20		
RAK-25NH5	2.5	1.00-3.10	1.10-4.40	11-17	14-18
RAK-35NH5	3.5	1.00-4.00	1.10-5.00	16-24	17-22
RAK-50NH5	5.0	1.00-5.60	1.10-7.20	23-34	23-29
RAI-25NH5	2.5	1.00-3.10	1.10-4.40	11-17	14-18
RAI-35NH5	3.5	1.00-4.00	1.10-5.00	18-28	22-27
RAI-50NH5	5.0	1.00-5.60	1.10-7.20	23-34	23-29
RAD-25NH5	2.5	1.00-3.10	1.10-4.40	11-17	14-18
RAD-35NH5	3.5	1.00-4.00	1.10-5.00	18-28	22-27
RAF-25NH5	2.5	1.00-3.10	1.10-4.40	11-17	14-18
RAF-35NH5	3.5	1.00-4.00	1.10-5.00	16-24	17-22
RAF-50NH5	5.0	1.00-5.60	1.10-7.20	23-34	23-29

Two units must be connected to the outdoor unit to avoid water condensation and result in water splash.
One-unit values are for one unit operation with two indoor connected.
Total nominal cooling capacity should not be more than 7.5kW.

4.7.3. RAM-65QH5

Whichever indoor units are installed, cooling and heating capacity depends on how many and which indoor units are operating at the same time.

Possible combinations to operate		Cooling			Heating		
		Capacity rating (kW)	Outdoor unit		Capacity rating (kW)	Outdoor unit	
			Power consumption (W)	Total ampere (A) 230V		Power consumption (W)	Total ampere (A) 230V
One unit	1.8	1.80 (1.00-2.50)	560 (200-750)	2.5	2.50 (1.10-3.20)	750 (200-1,050)	3.3
	2.5	2.50 (1.00-2.80)	780 (200-980)	3.4	3.90 (1.10-4.70)	1,145 (200-1,380)	5.0
	3.5	3.50 (1.00-3.90)	1,160 (200-1,280)	5.1	4.80 (1.10-5.80)	1,550 (200-1,870)	6.8
	5.0	5.00 (1.00-5.60)	1,780 (200-1,960)	7.8	6.50 (1.10-7.20)	2,400 (200-2,660)	10.5
Two units	1.8+1.8	1.80+1.80 (1.50-4.00)	1,190 (200-1,300)	5.2	2.50+2.50 (1.50-5.20)	1,460 (200-1,550)	6.4
	1.8+2.5	1.80+2.40 (1.50-4.60)	1,310 (200-1,450)	5.8	2.40+3.80 (1.50-6.30)	1,820 (200-1,920)	8.0
	1.8+3.5	1.70+3.30 (1.50-5.60)	1,650 (200-1,820)	7.2	2.30+4.50 (1.50-7.20)	1,995 (200-2,100)	8.8
	1.8+5.0	1.40+4.00 (1.50-5.90)	1,795 (200-1,980)	7.9	2.00+5.00 (1.50-7.20)	2,050 (200-2,100)	9.0
	2.5+2.5	2.50+2.50 (1.50-5.60)	1,650 (200-1,820)	7.2	3.40+3.40 (1.50-7.20)	2,015 (200-2,100)	8.8
	2.5+3.5	2.17+3.03 (1.50-5.70)	1,730 (200-1,900)	7.6	3.15+3.85 (1.50-7.20)	2,070 (200-2,100)	9.1
	3.5+3.5	2.70+2.70 (1.50-5.90)	1,795 (200-1980)	7.9	3.60+3.60 (1.50-7.20)	2,110 (200-2,110)	9.3
	2.5+5.0	1.80+3.60 (1.50-5.90)	1,795 (200-1980)	7.9	2.70+4.50 (1.50-7.20)	2,110 (200-2,110)	9.3
	3.5+5.0	2.20+3.20 (1.50-5.90)	1,995 (200-2200)	8.8	3.05+4.15 (1.50-7.20)	2,110 (200-2,110)	9.3
Three unit	1.8+1.8+1.8	1.80+1.80+1.80 (1.50-6.00)	1,780 (200-2200)	7.8	2.33+2.33+2.33 (1.50-7.20)	1,850 (200-2,110)	8.2
	1.8+1.8+2.5	1.80+1.80+2.50 (1.50-6.40)	2,020 (200-2200)	8.9	2.00+2.00+3.20 (1.50-7.20)	1,900 (200-2,110)	8.4
	1.8+1.8+3.5	1.6+1.6+3.10 (1.50-6.60)	2095 (200-2200)	9.2	1.85+1.85+3.50 (1.50-7.20)	1,900 (200-2,110)	8.4
	1.8+1.8+5.0	1.30+1.30+3.70 (1.50-6.60)	2095 (200-2200)	9.2	1.60+1.60+4.00 (1.50-7.20)	1,900 (200-2,110)	8.4
	1.8+2.5+2.5	1.70+2.30+2.30 (1.50-6.60)	2095 (200-2200)	9.2	1.80+2.70+2.70 (1.50-7.20)	1900 (200-2110)	8.4
	1.8+2.5+3.5	1.50+2.00+2.80 (1.50-6.60)	2095 (200-2200)	9.2	1.60+2.50+3.10 (1.50+7.20)	1900 (200-2110)	8.4
	1.8+3.5+3.5	1.30+2.50+2.50 (1.50-6.60)	2095 (200-2200)	9.2	1.40+2.90+2.90 (1.50-7.20)	1900 (200-2110)	8.4
	2.5+2.5+2.5	2.10+2.10+2.10 (1.50-6.60)	2095 (200-2200)	9.2	2.40+2.40+2.40 (1.50-7.20)	1900 (200-2110)	8.4
	2.5+2.5+2.5	1.85+1.85+2.60 (1.50-6.60)	2095 (200-2200)	9.2	2.23+2.23+2.74 (1.50-7.20)	1900 (200-2110)	8.4

Indoor unit model	Nominal cooling capacity (kW)	Capacity (kW) at single unit operation		Suitable room size (m^2) At single unit operation	
		Cooling	Heating	Cooling	Heating
RAK-18NH5	1.8	1.00-2.50	1.10-3.20		
RAK-25NH5	2.5	1.00-3.10	1.10-4.40	11-17	14-18
RAK-35NH5	3.5	1.00-4.00	1.10-5.00	16-24	17-22
RAK-50NH5	5.0	1.00-5.60	1.10-7.20	23-34	23-29
RAI-25NH5	2.5	1.00-3.10	1.10-4.40	11-17	14-18
RAI-35NH5	3.5	1.00-4.00	1.10-5.00	18-28	22-27
RAI-50NH5	5.0	1.00-5.60	1.10-7.20	23-34	23-29
RAD-25NH5	2.5	1.00-3.10	1.10-4.40	11-17	14-18
RAD-35NH5	3.5	1.00-4.00	1.10-5.00	18-28	22-27
RAF-25NH5	2.5	1.00-3.10	1.10-4.40	11-17	14-18
RAF-35NH5	3.5	1.00-4.00	1.10-5.00	16-24	17-22
RAF-50NH5	5.0	1.00-5.60	1.10-7.20	23-34	23-29

Two units must be connected to the outdoor unit to avoid water condensation and result in water splash.
One-unit values are for one unit operation with two indoor connected.
Total nominal cooling capacity should not be more than 8.8kW.

4.7.4. RAM-72QH5

Whichever indoor units are installed, cooling and heating capacity depends on how many and which indoor units are operating at the same time.

Possible combinations to operate		Cooling			Heating		
		Capacity rating (kW)	Outdoor unit		Capacity rating (kW)	Outdoor unit	
			Power consumption (W)	Total ampere (A) 230V		Power consumption (W)	Total ampere (A) 230V
One unit	1.8	1.80 (1.50-2.00)	450 (280-500)	2.0	2.50 (1.80-3.50)	850 (320-1,130)	3.7
	2.5	2.50 (1.50-2.80)	650 (280-720)	2.9	3.40 (1.80-4.70)	1,130 (320-1,480)	5.0
	3.5	3.50 (1.50-3.90)	1,030 (280-1,130)	4.5	4.30 (1.80-5.80)	1,520 (320-1,950)	6.7
	5.0	5.00 (1.50-6.60)	1,640 (280-1800)	7.2	6.50 (1.80-7.20)	2400 (320-2530)	10.5
	6.0	6.00 (1.00-6.60)	2,080 (280-2,290)	9.1	7.30 (1.80-8.50)	2,590 (320-2,860)	11.4
◇ Two units	1.8+1.8	1.80+1.80 (2.00-4.00)	830 (380-1,020)	3.6	3.20+3.20 (2.20-8.60)	1,770 (390-2,750)	7.8
	1.8+2.5	1.80+2.50 (2.00-4.70)	1,120 (380-1,360)	4.9	3.20+3.60 (2.20-9.30)	1,940 (390-3,000)	8.5
	1.8+3.5	1.80+3.50 (2.00-5.80)	1,600 (380-1,950)	7.0	3.20+4.30 (2.20-9.50)	2,240 (390-3,120)	9.8
	1.8+5.0	1.80+5.00 (2.00-7.10)	2,420 (380-2,820)	10.6	2.30+6.30 (2.20-9.50)	2,470 (390-3120)	10.8
	1.8+6.0	1.70+5.40 (2.00-7.50)	2,450 (380-2,980)	10.8	2.00+6.60 (2.20-9.50)	2,450 (390-3,120)	10.8
	2.5+2.5	2.50+2.50 (2.00-5.50)	1,410 (380-1,720)	6.2	3.60+3.60 (2.20-9.50)	2,070 (390-3,120)	9.1
	2.5+3.5	2.50+3.50 (2.00-6.60)	1.950 (380-2,380)	8.6	3.60+4.30 (2.20-9.50)	2,420 (390-3,120)	10.6
	2.5+5.0	2.40+4.70 (2.00-7.50)	2,530 (380-2,980)	11.1	2.90+5.70 (2.20-9.50)	2,470 (390-3,120)	10.8
	2.5+6.0	2.10+5.00 (2.00-7.50)	2,450 (380-2980)	10.8	2.55+6.05 (2.20-9.50)	2,450 (390-3,120)	10.8
	3.5+3.5	3.50+3.50 (2.00-7.40)	2,630 (380-2,940)	11.6	4.30+4.30 (2.20-9.50)	2,670 (390-3,120)	11.7
	3.5+5.0	2.90+4.20 (2.00-7.50)	2,530 (380-2,980)	11.1	3.55+5.05 (2.20-9.50)	2,470 (390-3,120)	10.8
	3.5+6.0	2.60+4.50 (2.00-7.80)	2,450 (380-3,100)	10.8	3.15+5.45 (2.20-9.50)	2,450 (390-3,120)	10.8
	5.0+5.0	3.55+3.55 (2.00-8.00)	2,530 (380-3170)	11.1	4.30+4.30 (2.20-9.50)	2,470 (390-3120)	10.8
	5.0+6.0	3.20+3.90 (2.00-8.00)	2,360 (380-3,170)	10.4	3.90+4.70 (2.20-9.50)	2,450 (390-3,120)	10.8
Three unit	1.8+1.8+1.8	1.80+1.80+1.80 (2.20-5.90)	1,250 (420-2,190)	5.5	2.86+2.86+2.86 (2.40-9.50)	2,290 (430-2,600)	10.1
	1.8+1.8+2.5	1.80+1.80+2.50 (2.20-6.70)	1,590 (420-2,480)	7.0	2.55+2.55+3.50 (2.40-9.50)	2,290 (430-2,600)	10.1
	1.8+1.8+3.5	1.80+1.80+3.50 (2.20-7.80)	2,210 (420-2,890)	9.7	2.20+2.20+4.20 (2.40-9.50)	2,290 (430-2,600)	10.1
	1.8+1.8+5.0	1.50+1.50+4.10 (2.20-8.00)	2,180 (420-2,960)	9.6	1.80+1.80+5.00 (2.40-9.50)	2,280 (430-2600)	10.0
	1.8+1.8+6.0	1.35+1.35+4.40 (2.20-8.00)	2,160 (420-2,960)	9.5	1.60+1.60+5.40 (2.40-9.50)	2,260 (430-2,600)	9.9
	1.8+2.5+2.5	1.80+2.50+2.50 (2.20-7.50)	2,040 (420-2,780)	9.0	2.30+3.15+3.15 (2.40-9.50)	2,290 (430-2,600)	10.1
	1.8+2.5+3.5	1.65+2.25+3.20 (2.20-8.00)	2,210 (420-2,960)	9.7	2.00+2.75+3.85 (2.40-9.50)	2,290 (430-2,600)	10.1
	1.8+2.5+5.0	1.40+1.90+3.80 (2.20-8.80)	2,180 (420-2,960)	9.6	1.70+2.30+4.60 (2.40-9.50)	2,280 (430-2,600)	10.0
	1.8+2.5+6.0	1.25+1.70+4.15 (2.20-8.00)	2,160 (420-2,960)	9.5	1.50+2.10+5.00 (2.40-9.50)	2,260 (430-2,600)	9.9
	1.8+3.5+3.5	1.40+2.85+2.85 (2.20-8.00)	2,210 (420-2,960)	9.7	1.80+3.40+3.40 (2.40-9.50)	2,290 (430-2,600)	10.1

Possible combinations to operate		Cooling			Heating		
		Capacity rating (kW)	Outdoor unit		Capacity rating (kW)	Outdoor unit	
			Power consumption (W)	Total ampere (A) 230V		Power consumption (W)	Total ampere (A) 230V
Three Unit	1.8+3.5+5.0	1.25+2.40+3.45 (2.20-8.00)	2,180 (420-2,960)	9.6	1.5+2.9+4.2 (2.40-9.50)	2,280 (430-2,600)	10.0
	2.5+2.5+2.5	2.36+2.36+2.36 (2.20-7.80)	2,210 (420-2,890)	9.7	2.86+2.86+2.86 (2.40-9.50)	2,290 (430-2,600)	10.1
	2.5+2.5+3.5	2.1+2.1+2.9 (2.20-8.00)	2,210 (420-2,960)	9.7	2.55+2.55+3.50 (2.40-9.50)	2,290 (430-2,600)	10.1
	2.5+2.5+5.0	1.8+1.8+3.5 (2.20-8.00)	2,180 (420-2960)	9.6	2.15+2.15+4.3 (2.40+9.50)	2,280 (430-2,600)	10.0
	2.5+2.5+6.0	1.6+1.6+3.9 (2.20-8.00)	2,160 (420-2,960)	9.5	1.95+1.95+4.70 (2.40-9.50)	2,260 (430-2,600)	9.9
	2.5+3.5+3.5	1.9+2.6+2.6 (2.20-8.00)	2,210 (420-2,960)	9.7	2.2+3.2+3.2 (2.40-9.50)	2,290 (430-2,600)	10.1
	2.5+3.5+5.0	1.6+2.25+3.25 (2.20-8.00)	2,180 (420-2,960)	9.6	1.95+2.75+3.90 (2.40-9.50)	2,280 (430-2,600)	10.0
	3.5+3.5+3.5	2.36+2.36+2.36 (2.20-8.00)	2,210 (420-2,960)	9.7	2.86+2.86+2.86 (2.40-9.50)	2,280 (430-2,600)	10.0
Four Units	1.8+1.8+1.8+1.8	1.77+1.77+1.77+1.77 (2.40-7.90)	2,140 (450-2,870)	9.4	2.15+2.15+2.15+2.15 (2.60-9.50)	2,200 (460-2,520)	9.7
	1.8+1.8+1.8+2.5	1.6+1.6+1.6+2.3 (2.40-8.30)	2,140 (450-3,020)	9.4	2.0+2.0+2.0+2.6 (2.60-9.50)	2,200 (460-2,520)	9.7
	1.8+1.8+1.8+3.5	1.45+1.45+1.45+2.75 (2.40-8.50)	2,140 (450-3,090)	9.4	1.8+1.8+1.8+3.2 (2.60-9.50)	2,200 (460-2,520)	9.7
	1.8+1.8+1.8+5.0	1.25+1.25+1.25+3.35 (2.40-8.80)	2,140 (450-3,200)	9.4	1.5+1.5+1.5+4.1 (2.60-9.50)	2,180 (460-2,520)	9.6
	1.8+1.8+2.5+2.5	1.5+1.5+2.05+2.05 (2.40-8.50)	2,140 (450-3,090)	9.4	1.8+1.8+2.5+2.5 (2.60-9.50)	2,200 (460-2,520)	9.7
	1.8+1.8+2.5+3.5	1.35+1.35+1.80+2.6 (2.40-8.50)	2,140 (450-3,090)	9.4	1.6+1.6+2.25+3.15 (2.60-9.50)	2,200 (460-2,520)	9.7
	1.8+1.8+3.5+3.5	1.2+1.2+2.35+2.35 (2.40-8.80)	2,140 (450-3,200)	9.4	1.5+1.5+2.8+2.8 (2.60-9.50)	2,180 (460-2,520)	9.6
	1.8+2.5+2.5+2.5	1.4+1.9+1.9+1.9 (2.40-8.50)	2,140 (450-3,090)	9.4	1.7+2.3+2.3+2.3 (2.60-9.50)	2,200 (460-2,520)	9.7
	1.8+2.5+2.5+3.5	1.25+1.75+1.75+2.35 (2.40-8.50)	2,140 (450-3200)	9.4	1.5+2.1+2.1+2.9 (2.60+9.50)	2,180 (460-2,520)	9.6
	2.5+2.5+2.5+2.5	1.77+1.77+1.77+1.77 (2.40+8.80)	2,140 (450-3200)	9.4	2.15+2.15+2.15+2.15 (2.60+9.50)	2,180 (460-2,520)	9.6
	2.5+2.5+2.5+3.5	1.6+1.6+1.6+2.3 (2.40+8.80)	2,140 (450-3200)	9.4	1.95+1.95+1.95+2.75 (2.60-9.50)	2,180 (460-2,520)	9.6

Indoor unit model	Nominal cooling capacity (kW)	Capacity (kW) at single unit operation		Suitable room size (m^2) At single unit operation	
		Cooling	Heating	Cooling	Heating
RAD-25NH5	2.5	1.00-2.80	1.10-4.70	11-17	15-18
RAD-35NH5	4.0	1.00-4.50	1.10-6.80	18-28	22-27
RAF-25NH5	2.5	1.00-2.80	1.10-4.70	11-17	15-18
RAF-35NH5	5.0	1.00-5.60	1.10-7.60	23-34	23-30
RAF-50NH5	5.0	1.00-5.60	1.10-7.20	23-34	23-29

Two or three indoor units can be installed with one outdoor unit.
One-unit values are for one unit operation with two indoor connected.
Total nominal cooling capacity should not be more than 11.0kW.

4.7.5. RAM-80QH5

Whichever indoor units are installed, cooling and heating capacity depends on how many and which indoor units are operating at the same time.

Possible combinations to operate		Cooling			Heating		
		Capacity rating (kW)	Outdoor unit		Capacity rating (kW)	Outdoor unit	
			Power consumption (W)	Total ampere (A) 230V		Power consumption (W)	Total ampere (A) 230V
One unit	1.8	1.80 (1.00-2.50)	560 (360-750)	2.5	2.50 (1.10-3.20)	690 (320-970)	3.0
	2.5	2.50 (1.00-2.80)	780 (360-980)	3.4	3.90 (1.10-4.70)	1,100 (320-1,280)	4.8
	3.5	3.50 (1.00-4.00)	1,160 (360-1,280)	5.1	4.80 (1.10-5.80)	1,380 (320-1,750	6.1
	5.0	5.00 (1.00-5.60)	1,910 (360-2,100)	8.4	6.70 (1.10-7.60)	2,070 (320-2,170)	9.1
◇ Two units	1.8+1.8	1.80+1.80 (1.50-4.10)	1,120 (640-1,240)	4.9	2.50+2.50 (1.50-5.50)	1,380 (600-1,520)	6.1
	1.8+2.5	1.80+2.50 (1.50-4.50)	1,320 (640-1,450)	5.8	2.50+3.90 (1.50-7.00)	1,770 (600-1,950)	7.8
	1.8+3.5	1.80+3.50 (1.50-5.80)	1,760 (640-1,940)	7.7	2.50+4.80 (1.50-8.40)	2,150 (600-2,380)	9.4
	1.8+5.0	1.70+4.90 (1.50-7.20)	1,990 (640-2,190)	8.7	2.20+6.00 (1.50-9.00)	2,850 (600-3,150)	12.5
	2.5+2.5	2.50+2.50 (1.50-5.60)	1,560 (640-1,720)	6.9	3.90+3.90 (1.50-8.60)	2,160 (600-2,390)	9.5
	2.5+3.5	2.50+3.50 (1.50-6.60)	1,990 (640-2,190)	8.7	3.90+4.80 (1.50-9.60)	2,690 (600-2,960)	11.8
	2.5+5.0	2.50+4.50 (1.50-7.60)	2,600 (640-2,860)	11.4	3.00+6.00 (1.50-9.90)	3,200 (600-3,550)	14.1
	3.5+3.5	3.50+3.50 (1.50-7.60)	2,600 (640-2,860)	11.4	4.70+4.70 (1.50-10.30)	3,200 (600-3,520)	14.1
	3.5+5.0	3.10+4.40 (1.50-8.00)	2,720 (640-2,990)	11.9	4.00+5.60 (1.50-10.60)	3,300 (600-3,630)	14.5
	5.0+5.0	4.00+4.00 (1.50-8.20)	2,760 (640-3,040)	12.1	4.80+4.80 (1.50-10.60)	3,300 (600-3,630)	14.5
Two units	1.8+1.8	1.80+1.80 (1.50-4.00)	1,120 (640-1,230)	4.9	2.25+2.25 (1.50-5.20)	1,280 (600-1,480)	5.6
	1.8+2.5	1.70+2.30 (1.50-4.50)	1,280 (640-1,400)	5.6	2.20+2.60 (1.50-5.50)	1,360 (600-1,600)	6.0
	1.8+3.5	1.60+3.40 (1.50-5.50)	1,660 (640-1,830)	7.3	2.00+3.80 (1.50-6.40)	1,580 (600-1,740)	6.9
	1.8+5.0	1.50+4.10 (1.50-6.20)	1,860 (640-2,050)	8.2	1.70+4.50 (1.50-6.80)	1,930 (600-2,120)	8.5
	2.5+2.5	2.50+2.50 (1.50-5.50)	1,660 (640-1,830)	7.3	2.90+2.90 (1.50-6.40)	1,580 (600-1,740)	6.9
	2.5+3.5	2.30+3.30 (1.50-6.20)	1,860 (640-2050)	8.2	2.60+3.60 (1.50-6.80)	1,930 (600-2,120)	8.5
	3.5+3.5	2.80+2.80 (1.50-6.20)	1,860 (640-2,050)	8.2	3.10+3.10 (1.50-6.80)	1,930 (600-2,120)	8.5
Three unit	1.8+1.8+1.8	1.80+1.80+1.80 (3.00-6.00)	1,750 (650-2,100)	7.7	2.50+2.50+2.50 (3.00-8.30)	1,860 (620-3,630)	8.2
	1.8+1.8+2.5	1.80+1.80+2.50 (3.00-6.70)	1,980 (650-2,380)	8.7	2.50+2.50+3.90 (3.00-9.80)	2,210 (620-3,630)	9.7
	1.8+1.8+3.5	1.80+1.80+3.50 (3.00-7.50)	2,300 (650-2,760)	10.1	2.50+2.50+4.80 (3.00-10.80)	2,430 (620-3,630)	10.7
	1.8+1.8+5.0	1.70+1.70+4.60 (3.00-8.20)	2,580 (650-3,200)	11.3	2.20+2.20+5.80 (3.00-11.20)	2,530 (620-3,630)	11.1
	1.8+2.5+2.5	1.80+2.50+2.50 (3.00-7.50)	2,250 (650-2,700)	9.9	2.50+3.85+3.85 (3.00-11.20)	2,530 (620-3,630)	11.1
	1.8+2.5+3.5	1.80+2.50+3.50 (3.00-8.00)	2,510 (650-3,000)	11.0	2.30+3.50+4.40 (3.00-11.20)	2,530 (620-3,630)	11.1
	1.8+2.5+5.0	1.50+2.00+4.50 (3.00-8.20)	2,580 (650-3,200)	11.3	2.00+3.00+5.20 (3.00-11.20)	2,530 (620-3,630)	11.1
	1.8+3.5+3.5	1.60+3.20+3.20 (3.00-8.50)	2,580 (650-3,200)	11.3	2.00+4.10+4.10 (3.00-11.20)	2,530 (620-3,630)	11.1

	1.8+3.5+5.0	1.50+2.50+4.00 (3.00~8.20)	2580 (650-3200)	11.3	1.80+3.50+4.90 (3.00-11.20)	2,530 (620-3630)	11.1
	1.8+5.0+5.0	1.20+3.40+3.40 (3.00~8.20)	2580 (650-3200)	11.3	1.60+4.30+4.30 (3.00-11.20)	2,530 (620-3630)	11.1
	2.5+2.5+2.5	2.50+2.50+2.50 (3.00~8.20)	2420 (650-3000)	10.6	3.40+3.40+3.40 (3.00-11.20)	2,530 (620-3630)	11.1
	2.5+2.5+3.5	2.30+2.30+3.40 (3.00~8.20)	2580 (650-3200)	11.3	3.00+3.00+4.20 (3.00-11.20)	2,530 (620-3630)	11.1
	2.5+2.5+5.0	2.00+2.00+4.00 (3.00-8.20)	2,580 (650-3,200)	11.3	2.60+2.60+5.00 (3.00-11.20)	2,530 (620-3,630)	11.1
	2.5+3.5+3.5	2.00+3.00+3.00 (3.00-8.20)	2,580 (650-3,200)	11.3	2.60+3.80+3.80 (3.00-11.20)	2,530 (620-3,630)	11.1
	2.5+3.5+5.0	1.80+2.60+3.60 (3.00-8.20)	2,580 (650-3,200)	11.3	2.30+3.30+4.60 (3.00-11.20)	2,530 (620-3,630)	11.1
	3.5+3.5+3.5	2.66+2.66+2.66 (3.00-8.20)	2,580 (650-3,200)	11.3	3.40+3.40+3.40 (3.00-11.20)	2,530 (620-3,630)	11.1
	3.5+3.5+5.0	2.40+2.40+3.20 (3.00-8.20)	2,580 (650-3,200)	11.3	3.00+3.00+4.20 (3.00-11.20)	2,530 (620-3,630)	11.1
Four unit	1.8+1.8+1.8+1.8	1.80+1.80+1.80+1.80 (3.00-8.30)	2,280 (650-2750)	10.0	2.50+2.50+2.50+2.50 (3.00-11.20)	2,560 (620-3,550)	11.2
	1.8+1.8+1.8+2.5	1.80+1.80+1.80+2.50 (3.00-9.00)	2,580 (650-3,100)	11.3	2.40+2.40+2.40+3.80 (3.00-12.40)	2,630 (620-3,630)	11.6
	1.8+1.8+1.8+3.5	1.60+1.60+1.60+3.20 (3.00-9.20)	2,650 (650-3,200)	11.6	2.30+2.30+2.30+4.10 (3.00-12.40)	2,630 (620-3,630)	11.6
	1.8+1.8+1.8+5.0	1.40+1.40+1.40+3.80 (3.00-9.20)	2,650 (650-3200)	11.6	2.00+2.00+2.00+5.00 (3.00+12.40)	2,630 (620-3,630)	11.6
	1.8+1.8+2.5+2.5	1.70+1.70+2.30+2.30 (3.00-9.20)	2,650 (650-3200)	11.6	2.20+2.20+3.30+3.30 (3.00-12.40)	2,630 (620-3,630)	11.6
	1.8+1.8+2.5+3.5	1.50+1.50+2.10+2.90 (3.00-9.20)	2,650 (650-3200)	11.6	2.00+2.00+3.10+3.90 (3.00-12.40)	2,630 (620-3,630)	11.6
	1.8+1.8+2.5+5.0	1.30+1.30+1.80+3.60 (3.00-9.20)	2,650 (650-3200)	11.6	1.80+1.80+2.70+4.70 (3.00-12.40)	2,630 (620-3,630)	11.6
	1.8+1.8+3.5+3.5	1.40+1.40+2.60+2.60 (3.00-9.20)	2,650 (650-3200)	11.6	1.90+1.90+3.60+3.60 (3.00-12.40)	2,630 (620-3,630)	11.6
	1.8+2.5+2.5+2.5	1.40+2.20+2.20+2.20 (3.00-9.20)	2,650 (650-3200)	11.6	2.00+3.00+3.00+3.00 (3.00+12.40)	2,630 (620-3,630)	11.6
	1.8+2.5+2.5+3.5	1.40+2.00+2.00+2.60 (3.00-9.20)	2,650 (650-3200)	11.6	1.80+2.80+2.80+3.60 (3.00-12.40)	2,630 (620-3,630)	11.6
	1.8+2.5+2.5+5.0	1.20+1.70+1.70+3.40 (3.00-9.20)	2,650 (650-3200)	11.6	1.60+2.60+2.60+4.20 (3.00-12.40)	2,630 (620-3,630)	11.6
	1.8+2.5+3.5+3.5	1.20+1.80+2.50+2.50 (3.00-9.20)	2,650 (650-3200)	11.6	1.70+2.70+3.30+3.30 (3.00-12.40)	2,630 (620-3,630)	11.6
	2.5+2.5+2.5+2.5	2.00+2.00+2.00+2.00 (3.00-9.20)	2,650 (650-3200)	11.6	2.75+2.75+2.75+2.75 (3.00-12.40)	2,630 (620-3,630)	11.6
	2.5+2.5+2.5+3.5	1.85+1.85+1.85+2.45 (3.00-9.20)	2,650 (650-3200)	11.6	2.50+2.50+2.50+3.50 (3.00-12.40)	2,630 (620-3,630)	11.6
	2.5+2.5+3.5+3.5	1.70+1.70+2.30+2.30 (3.00-9.20)	2,650 (650-3,200)	11.6	2.30+2.30+3.20+3.20 (3.00-12.40)	2,630 (620-3,630)	11.6

Indoor unit model	Nominal cooling capacity (kW)	Capacity (kW) at single unit operation		Suitable room size (m^2) At single unit operation	
		Cooling	Heating	Cooling	Heating
RAD-25NH5	2.5	1.00-2.80	1.10-4.70	11-17	15-18
RAD-35NH5	4.0	1.00-4.50	1.10-6.80	18-28	22-27
RAF-25NH5	2.5	1.00-2.80	1.10-4.70	11-17	15-18
RAF-35NH5	5.0	1.00-5.60	1.10-7.60	23-34	23-30
RAF-50NH5	5.0	1.00-5.60	1.10-7.20	23-34	23-29

Two, three or four indoor units can be installed with one outdoor unit.
One-unit values are for one unit operation with two indoor connected.

◊ Two unit Each unit connected to each compressor

♦ Two unit Both unit connected to the same compressor

Total nominal cooling capacity should not be more than 12.0kW.

5 WORKING RANGE

CONTENTS

5 WORKING RANGE 5-1
5.1. Power supply 5-2

5.1. POWER SUPPLY

Working Voltage	198V ~ 264V
Voltage Imbalance	Within a 3% Deviation from Each Voltage at the Main Terminal of Outdoor Unit
Starting Voltage	Higher than 85% of the Rated Voltage

The temperature range is indicated in the following table.

Cooling

working range	min (°C)	max (°C)	rated (°C)
outdoor	21	43	35
indoor	16	32	27

Heating

working range	min (°C)	max (°C)	rated (°C)
outdoor	-10	21	7
indoor	16	27	20

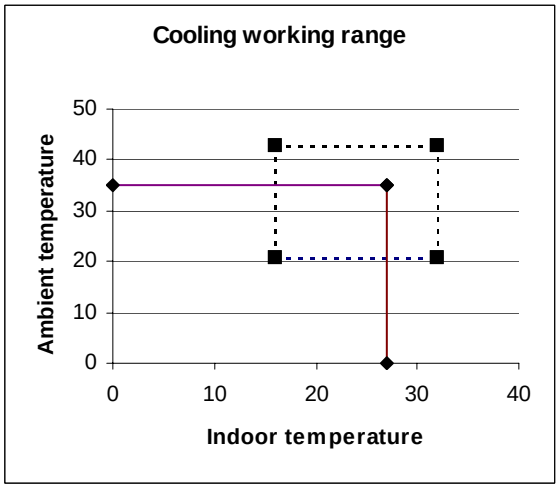

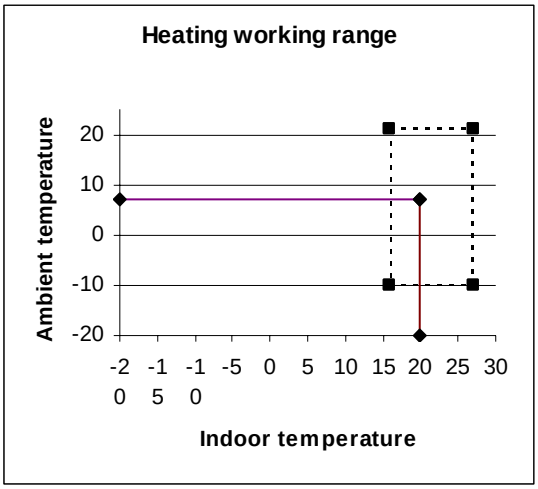

Applicable models:
RAS-07G4, RAS-09G4, RAS-14G4, RAS-18G4 , RAS-24G4 , RAS-07GH4, RAS-09GH4 , RAS-14GH4 , RAS-18GH4 RAS-24GH4

The temperature range is indicated in the following table.

Cooling

working range	min (°C)	max (°C)	rated (°C)
outdoor	-10	43	35
indoor	16	32	27

Heating

working range	min (°C)	max (°C)	rated (°C)
outdoor	-15	21	7
indoor	16	27	20

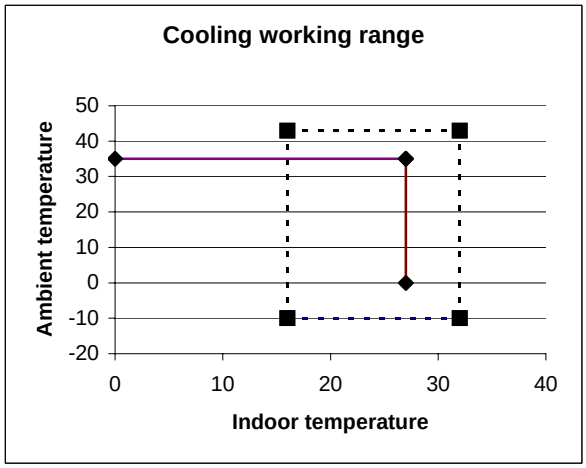

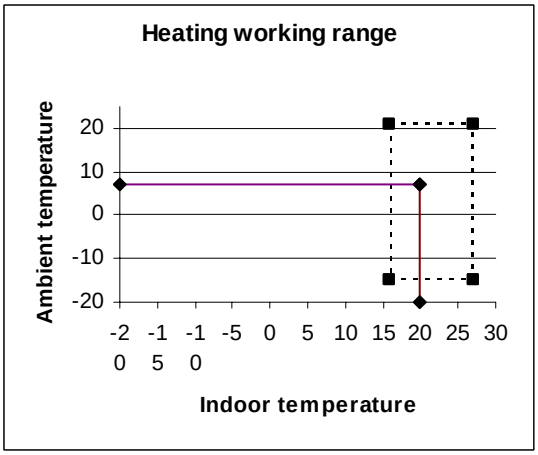

Applicable models:
RAK-18NH5, RAK-25NH5 ,RAK-35NH5, RAK-50NH5 , RAK-65NH5 , RAI-25NH5 ,RAI-35NH5 , RAI-50NH5 , RAD-25NH5 , RAD-35NH5 , RAF-25NH5 , RAF-35NH5 , RAF-50NH5 , RAM-40QH5 , RAM-55QH5, RAM-65QH5 , RAM-72QH5

The temperature range is indicated in the following table.

Cooling

working range	min (°C)	max (°C)	rated (°C)
outdoor	10	43	35
indoor	16	32	27

Heating

working range	min (°C)	max (°C)	rated (°C)
outdoor	-15	21	7
indoor	16	27	20

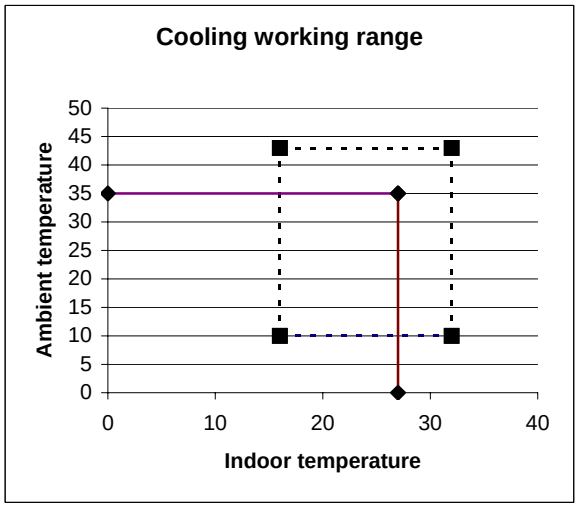

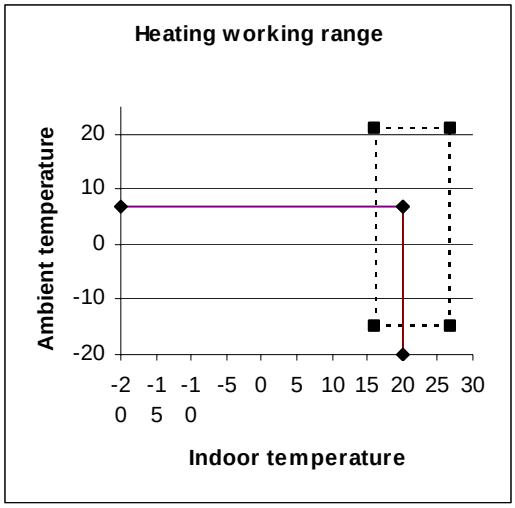

Applicable models:
RAM-80QH5

6 ELECTRICAL DATA

CONTENTS

6 ELECTRICAL DATA 6-1
6.1. Indoor Unit 6-2
6.2. Outdoor Unit 6-2

6.1. INDOOR UNIT

	Unit Main Power		Applicable Current		Indoor Fan Motor	
	VOL, PH, Hz	Fuse Rating (A)	STC	RNC	RNC	IPT
RAK-18NH5	DC35V	from outdoor	(C) 2.6 (H) 3.2	(C) 2.6 (H) 3.2	0.85	25
RAK-25NH5	DC35V	from outdoor	(C) 3.2 (H) 4.2	(C) 3.2 (H) 4.2	0.85	25
RAK-35NH5	DC35V	from outdoor	(C) 4.9 (H) 6.0	(C) 4.9 (H) 6.0	0.85	25
RAK-50NH5	DC35V	from outdoor	(C) 8.2 (H) 9.1	(C) 8.2 (H) 9.1	0.85	25
RAK-65NH5	DC35V	from outdoor	(C)10.6 (H) 11.0	(C)10.6 (H) 11.0	0.8/0.39	28/47
RAI-25NH5	DC35V	from outdoor	(C) 3.2 (H) 4.15	(C) 3.2 (H) 4.15	0.86	25
RAI-35NH5	DC35V	from outdoor	(C) 4.9 (H) 6.0	(C) 4.9 (H) 6.0	0.86	25
RAI-50NH5	DC35V	from outdoor	(C) 9.1 (H) 9.9	(C) 9.1 (H) 9.9	0.86	25
RAF-25NH5	DC35V	from outdoor	(C) 3.1 (H) 4.0	(C) 3.1 (H) 4.0	0.58	25
RAF-35NH5	DC35V	from outdoor	(C) 4.7 (H) 5.9	(C) 4.7 (H) 5.9	0.58	25
RAF-50NH5	DC35V	from outdoor	(C) 7.8 (H) 8.2	(C) 7.8 (H) 8.2	0.58	25
RAD-25NH5	DC35V	from outdoor	(C) 3.1 (H) 4.3	(C) 3.1 (H) 4.3	0.68	20
RAD-35NH5	DC35V	from outdoor	(C) 5.5 (H) 7.5	(C) 5.5 (H) 7.5	0.68	20
RAS-18YH5	DC35V	16	3.00	3.00	0.85	25
RAS-25YH5	DC35V	16	(C) 3.0 (H) 3.9	(C) 3.0 (H) 3.9	0.85	25
RAS-35YH5	DC35V	16	(C)4.55 (H) 4.69	(C)4.55 (H) 4.69	0.85	25
RAS-50YH5	DC35V	from outdoor	(C) 8.2 (H) 9.1	(C) 8.2 (H) 9.1	0.85	25
RAS-60YH5	DC35V	from outdoor	(C)10.6 (H)11.0	(C)10.6 (H)11.0	0.85	35
RAS-70YH5	220~240, 1, 50	16	(C)12.3 (H)12.7	(C)12.3 (H)12.7	0.85	35
RAS-80YH5	220~240, 1, 50	16	(C)14.1 (H)14.3	(C)14.1 (H)14.3	0.85	35
RAS-07G4	220~240, 1, 50	10	22	2.8	0.71/0.13	22.6/28.1
RAS-09G4	220~240, 1, 50	10	22	4.1	0.71/0.2	22.6/43.6
RAS-14G4	220~240, 1, 50	15	30	5	0.71/0.18	22.6/41
RAS-18G4	220~240, 1, 50	20	45	7.2	0.58/0.47	17.0/103.5
RAS-24G4	220~240, 1, 50	30	67	11.4	0.58/0.47	17.0/103.5
RAS-07GH4	220~240, 1, 50	10	22	(C) 2.8 (H) 2.3	0.71/0.13	22.6/28.1
RAS-09GH4	220~240, 1, 50	10	22	(C) 4.1 (H) 3.5	0.71/0.2	22.6/43.6
RAS-14GH4	220~240, 1, 50	15	30	(C) 5.0 (H) 4.6	0.71/0.18	22.6/41

RAS-18GH4	220~240, 1, 50	20	45	(C) 7.2 (H) 7.6	0.58/0.47	17.0/103.5
RAS-24GH4	220~240, 1, 50	30	67	(C) 11.4 (H) 12.0	0.58/0.47	17.0/103.5

VOL: Rated Unit Power Supply Voltage (V)
Hz: Frequency (Hz)
STC: Starting Current (A)
RNC: Running Current (A)
PH: Phase (ϕ)
IPT: Input (W)

6.2. OUTDOOR UNIT

Model	Unit Main Power				Compressor Motor					
	VOL, PH, Hz	Fuse Rating (A)	Min	Max	Locked Rotor Ampere (A)	STC	Cooling Operation		Heating Operation	
							RNC	IPT	RNC	IPT
RAC-25NH5	220 ~ 240, 1, 50	16	198	264	4.0	4.0	3.1	695	4	900
RAC-35NH5	220 ~ 240, 1, 50	16	198	264	5.8	5.8	4.7	1080	5.8	1320
RAC-50NH5	220 ~ 240, 1, 50	16	198	264	10.0	10.0	7.5	1780	8.3	1970
RAC-65NH5	220 ~ 240, 1, 50	16	198	264	10.0	10.0	9.4	2300	9.9	2400
RAM-40QH5	220 ~ 240, 1, 50	16	198	264	10.0	10.0	5.7	1245	6.2	1350
RAM-55QH5	220 ~ 240, 1, 50	16	198	264	10.0	10	8.2~7.6	1800	9.7~8.9	2100
RAM-65QH5	220 ~ 240, 1, 50	16	198	264	10.0	10	9.6~8.8	2100	8.7~8.0	1900
RAM-72QH5	220 ~ 240, 1, 50	16	198	264	10.6	10.6	9.6	2200	10.6	2500
RAM-80QH5	220 ~ 240, 1, 50	16	198	264	11.2	11.6	11.6	2700	11.6	1600
RAC-18YH5	220~230, 1, 50	16	198	264	9.4	2.81	2.81	600	2.81	600
RAC-25YH5	220~230, 1, 50	16	198	264	9.7	3.82	3.34	800	3.82	900
RAC-35YH5	220~230, 1, 50	16	198	264	9.7	5.78	4.73	1100	5.78	1300
RAC-50YH5	220~230, 1, 50	16	198	264	10.0	10	7.5	1780	8.3	1970
RAC-60YH5	220~230, 1, 50	16	198	264	10.0	10	10.6	2300	11.0	2400
RAC-70YH5	220~230, 1, 50	16	198	264	12.3	12.3	12.3	2670	12.7	2770
RAC-80YH5	220~230, 1, 50	16	198	264	14.0	14	14.1	3070	14.3	3100
RAC-07G4	220 ~ 240, 1, 50	22	198	264	22	22	2.8	630	2.3	530
RAC-09G4	220 ~ 240, 1, 50	22	198	264	22	22	4.2	950	3.5	810
RAC-14G4	220 ~ 240, 1, 50	30	198	264	30	30	5	1120	4.6	1050
RAC-18G4	220 ~ 240, 1, 50	45	198	264	45	45	7.1	1610	7.5	1720
RAC-24G4	220 ~ 240, 1, 50	67	198	264	67	67	11.2	2560	11.8	2720
RAC-07GH4	220 ~ 240, 1, 50	22	198	264	22	22	2.8	630	2.3	530
RAC-09GH4	220 ~ 240, 1, 50	22	198	264	22	22	4.2	950	3.5	810
RAC-14GH4	220 ~ 240, 1, 50	30	198	264	30	30	5	1120	4.6	1050
RAC-18GH4	220 ~ 240, 1, 50	45	198	264	45	45	7.1	1610	7.5	1720
RAC-24GH4	220 ~ 240, 1, 50	67	198	264	67	67	11.2	2560	11.8	2720

VOL: Rated Unit Power Supply Voltage (V)
HZ: Frequency (Hz)
STC: Starting Current (A)
RNC: Running Current (A)
PH: Phase (ϕ)
IPT: Input (W)

NOTE:

1. *The above compressor data is based on 100% capacity combination of indoor units at the rated operating frequency*
2. *This data is based on the same conditions as the nominal heating and cooling capacities.*
3. *The compressor started by an inverter, resulting in extremely low starting current.*

7 ELECTRICAL WIRING DIAGRAM

CONTENTS

7 ELECTRICAL WIRING DIAGRAM 7-1
7.1.1. RAK-18NH5/25NH5/35NH5/50NH5 7-2
7.1.2. RAK-65NH5 7-3
7.1.3. RAF-25NH5/35NH5/50NH5 7-4
7.1.4. RAI-25NH5/35NH5/50NH5 7-5
7.1.5. RAD-25NH5/35NH5 7-6
7.1.6. RAC-25NH5/35NH5/50NH5 7-7
7.1.7. RAC-65NH5 7-8
7.1.8. RAM-40QH5 7-9
7.1.9. RAM-55QH5 7-10
7.1.10. RAM-65QH5 7-11
7.1.11. RAM-72QH5 7-12
7.1.12. RAM-80QH5 7-13
7.1.13. RAS-18YH5/25YH5/35YH5/50YH5 7-14
7.1.14. RAS-60YH5/70YH5 7-15
7.1.15. RAS-80YH5 7-16
7.1.16. RAC-18YH5/25YH5/35YH5 7-17
7.1.17. RAC-50YH5/60YH5 7-18
7.1.18. RAC-70YH5 7-19
7.1.19. RAC-80YH5 7-20
7.1.20. RAS/RAC-07G4, RAS/RAC-09G4, RAS/RAC-14G4 7-21
7.1.21. RAS/RAC-18G4, RAS/RAC-24G4 7-22
7.1.22. RAS/RAC-07GH4, RAS/RAC-09GH4, RAS/RAC-14GH4 7-23
7.1.23. RAS/RAC-18GH4, RAS/RAC-24GH4 7-24

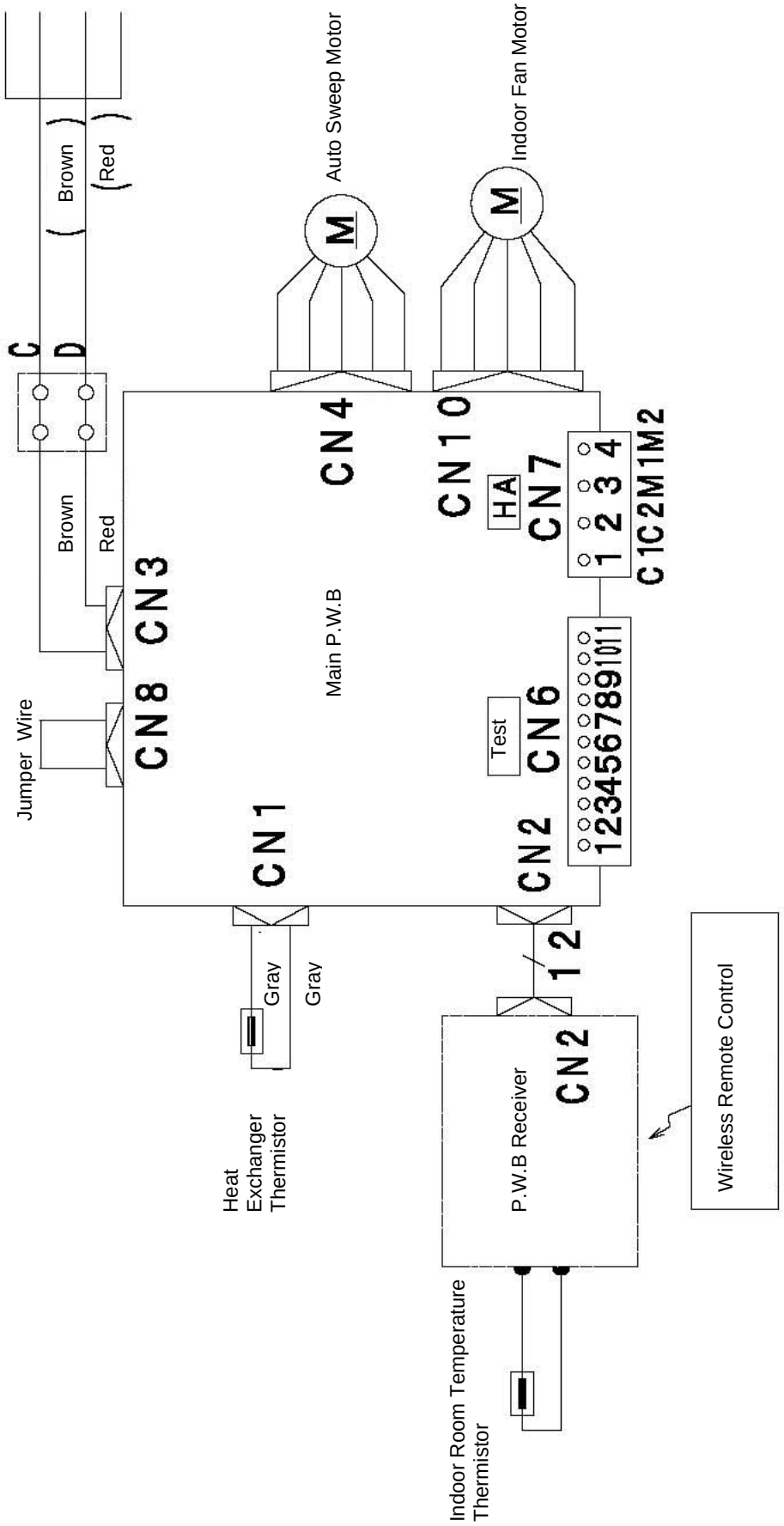
C
D
Brown
Red
Brown
Red
Jumper Wire
CN8
CN3
CN1
Main P.W.B
CN4
CN10
HA
CN7
1 2 3 4
C 1C 2M 1M 2
Test
CN6
1 2 3 4 5 6 7 8 9 10 11
CN2
Auto Sweep Motor
Indoor Fan Motor
M
M
Gray
Gray
Heat Exchanger Thermistor
1 2
CN2
P.W.B Receiver
Wireless Remote Control
Indoor Room Temperature Thermistor

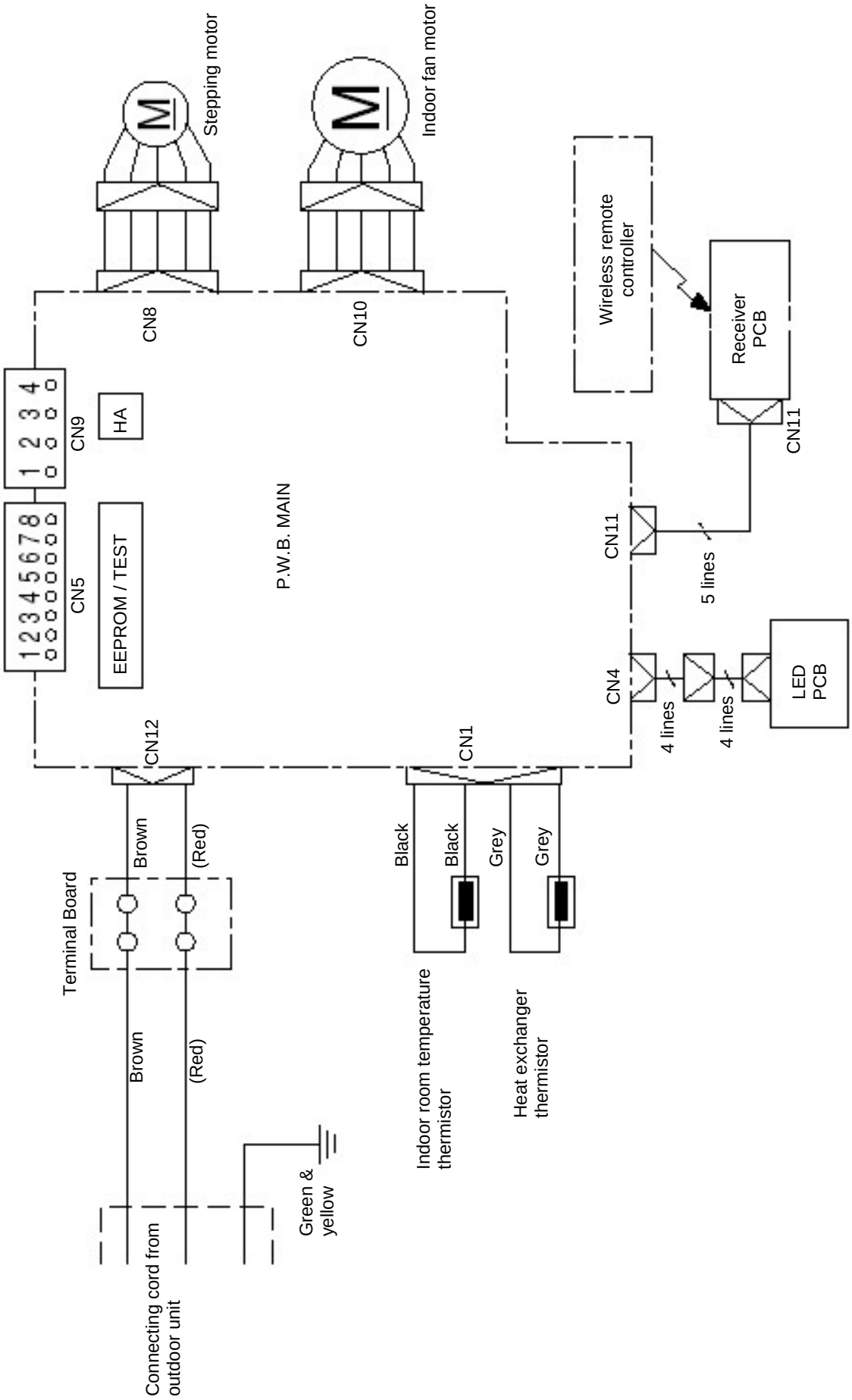
Stepping motor
Indoor fan motor
Wireless remote controller
Receiver PCB
CN8
CN10
CN11
CN9
HA
CN5
EEPROM / TEST
P.W.B. MAIN
CN11
5 lines
CN4
4 lines
4 lines
LED PCB
CN12
CN1
Terminal Board
Brown
(Red)
Black
Black
Grey
Grey
Brown
(Red)
Indoor room temperature thermistor
Heat exchanger thermistor
Green & yellow
Connecting cord from outdoor unit

RAF-25NH5, RAF-35NH5, RAF-50NH5

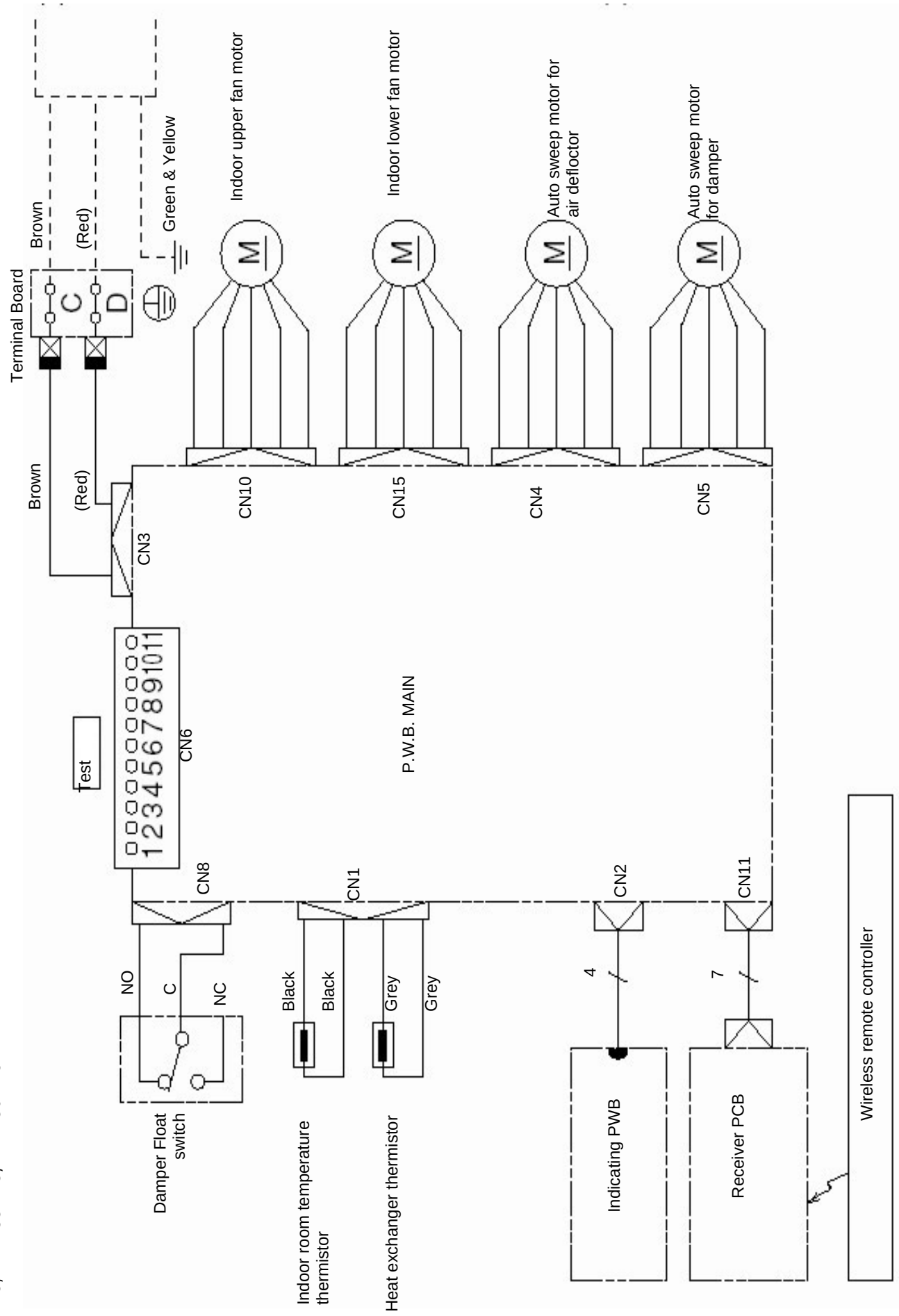

*Note: The mentioned models are using the same board assembly, change only in EEPROM data.

RAI-25NH5, RAI-35NH5, RAI-50NH5

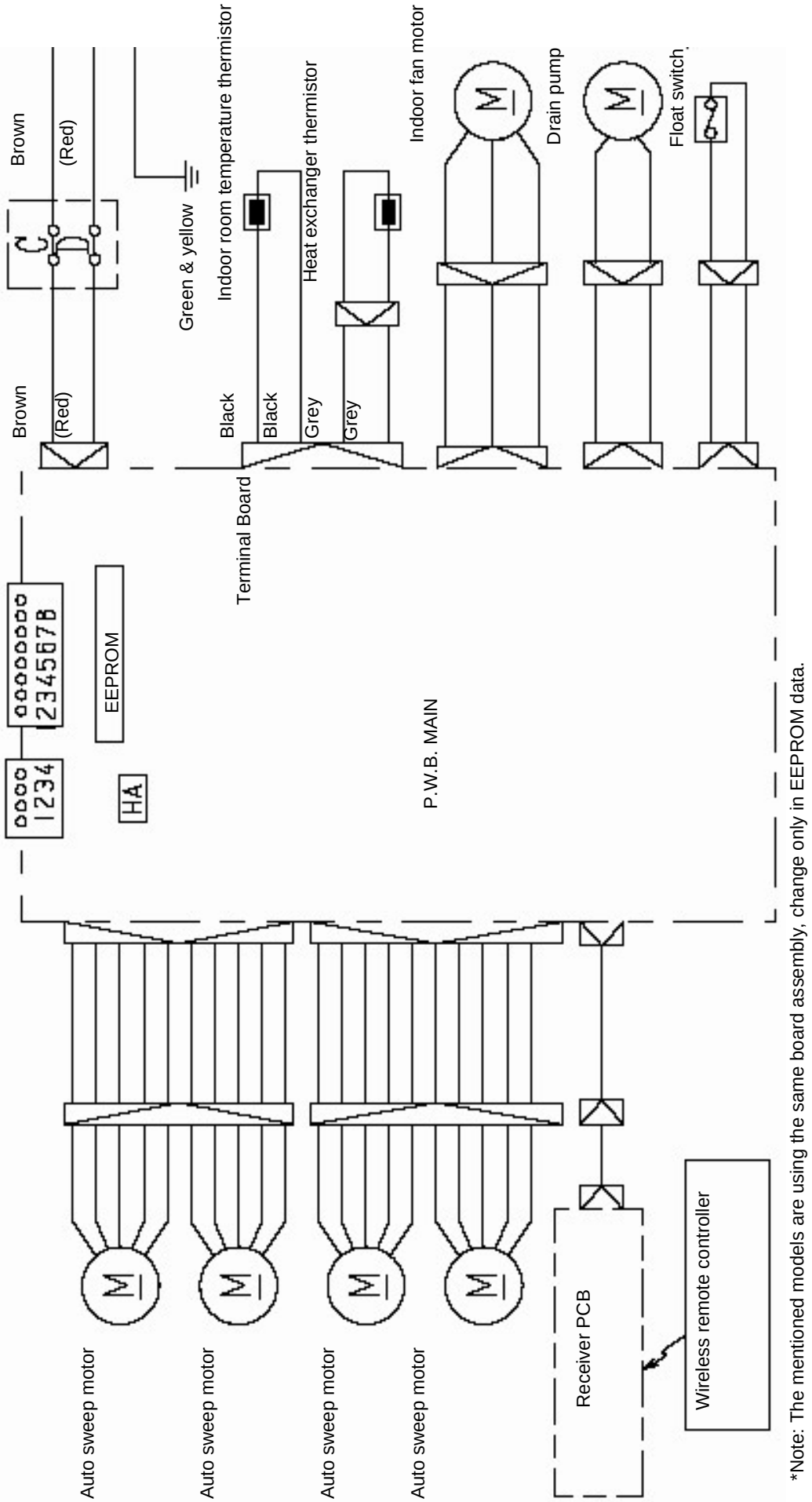

*Note: The mentioned models are using the same board assembly, change only in EEPROM data.

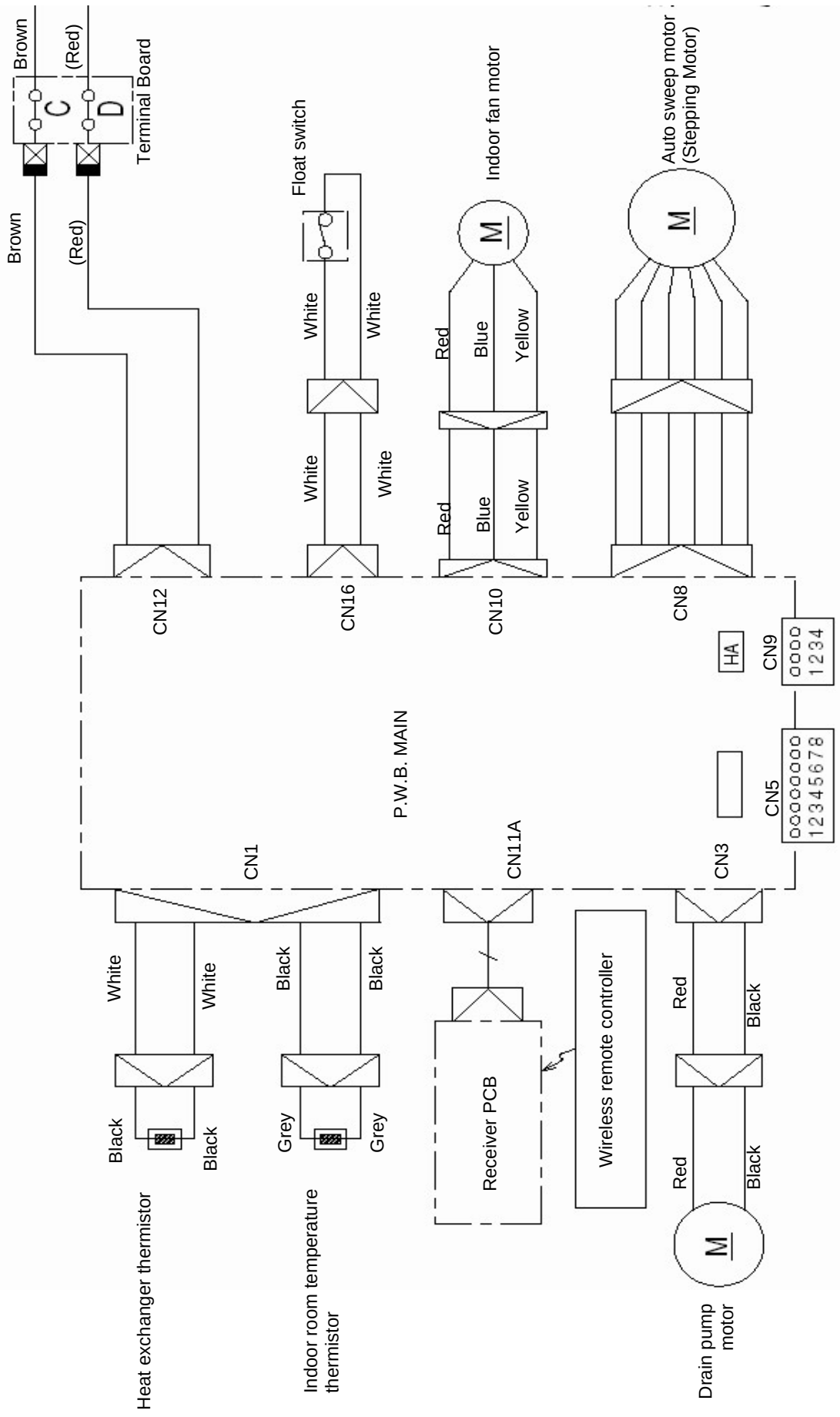

*Note: The mentioned models are using the same board assembly, change only in EEPROM data.

RAC-25NH5, RAC-35NH5, RAC-50NH5

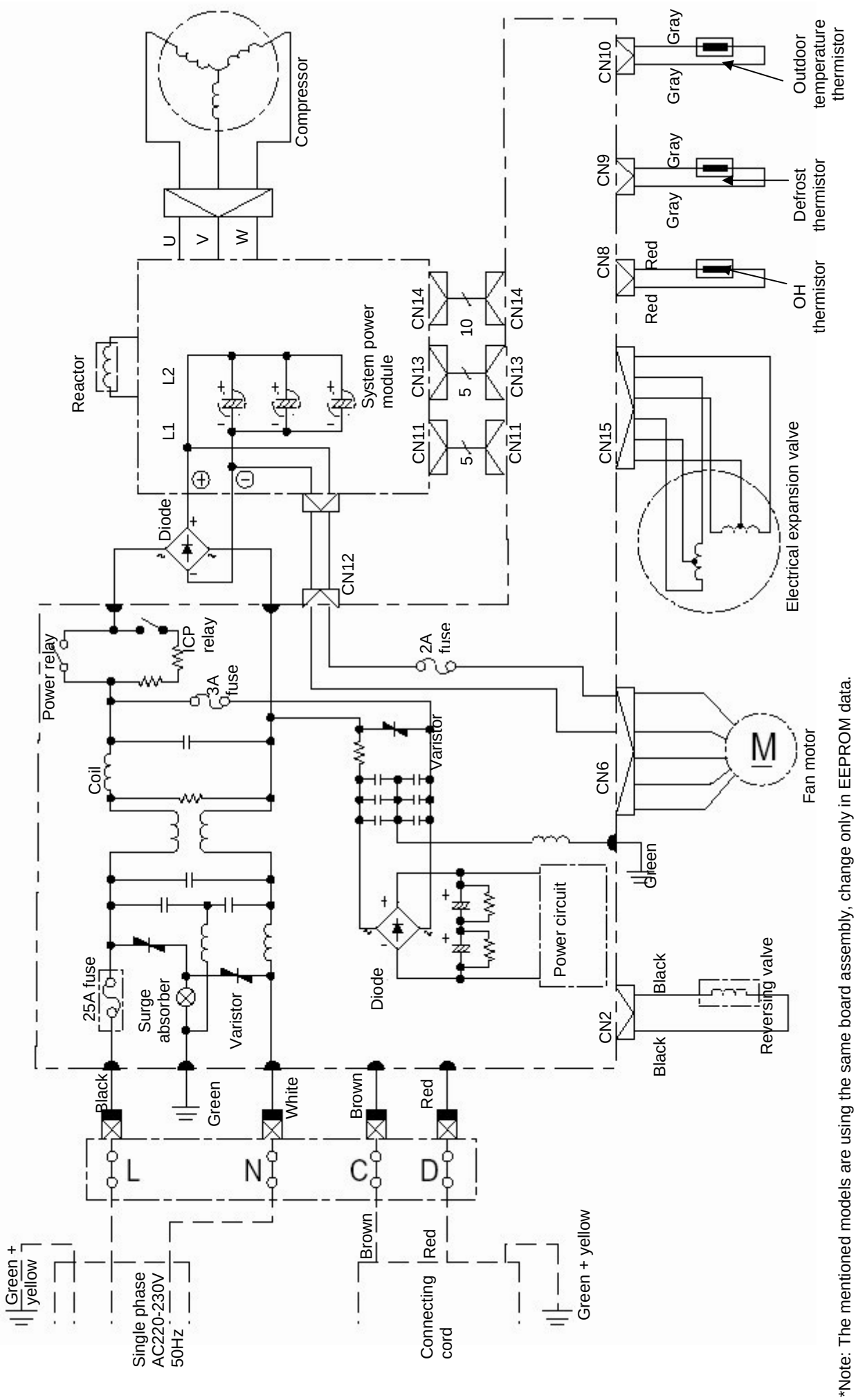

*Note: The mentioned models are using the same board assembly, change only in EEPROM data.

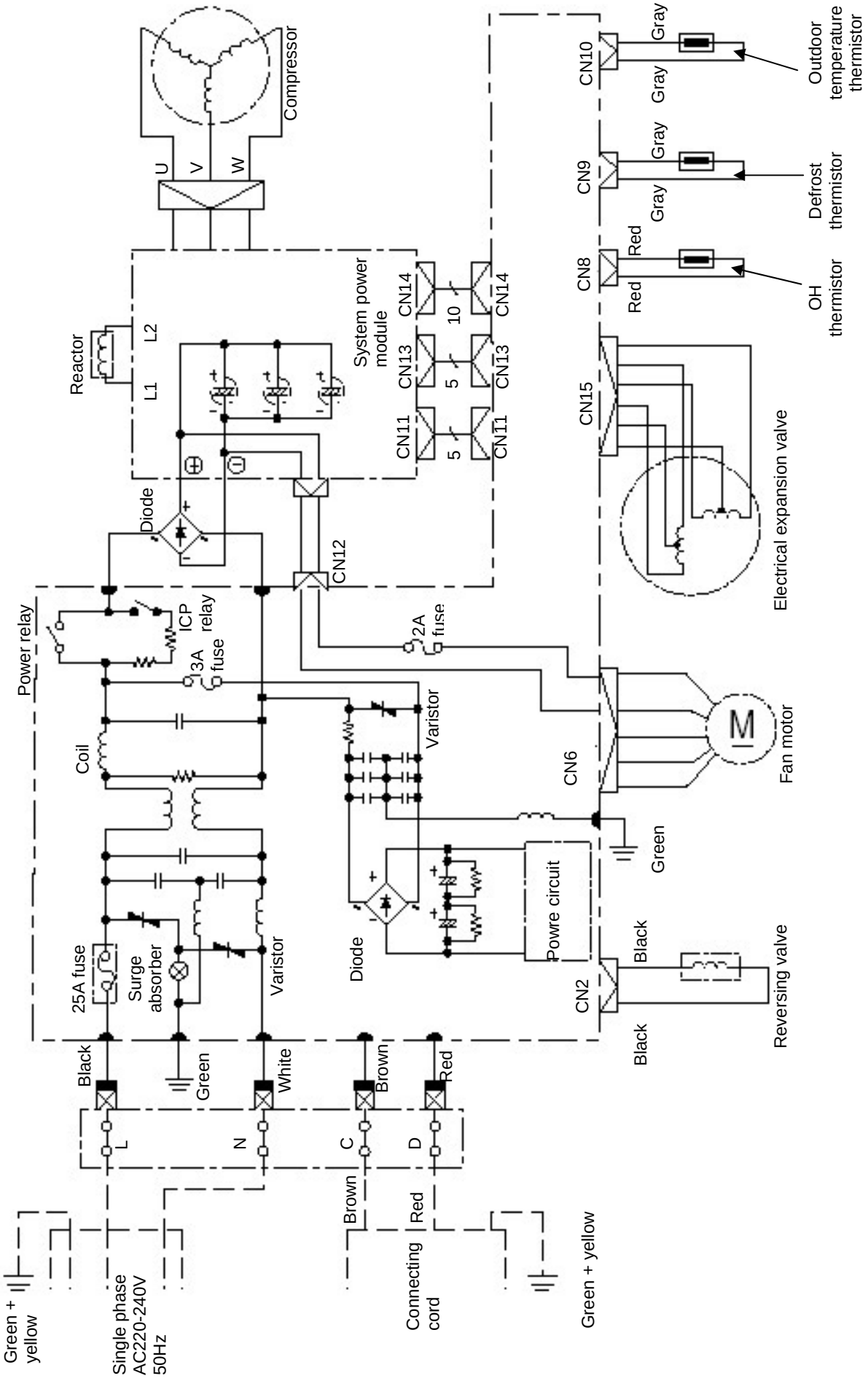
Compressor
U
V
W
Reactor
L1
L2
System power module
CN11
CN13
CN14
5
5
10
Diode
CN12
Power relay
ICP relay
3A fuse
2A fuse
Coil
Varistor
25A fuse
Surge absorber
Varistor
Diode
Powre circuit
CN6
CN2
CN15
CN8
CN9
CN10
Gray
Gray
Gray
Gray
Red
Red
Outdoor temperature thermistor
Defrost thermistor
OH thermistor
Electrical expansion valve
M
Fan motor
Green
Black
Black
Reversing valve
Black
Green
White
Brown
Red
L
N
C
D
Brown
Red
Connecting cord
Green + yellow
Green + yellow
Single phase AC220-240V 50Hz

RAC-65NH5

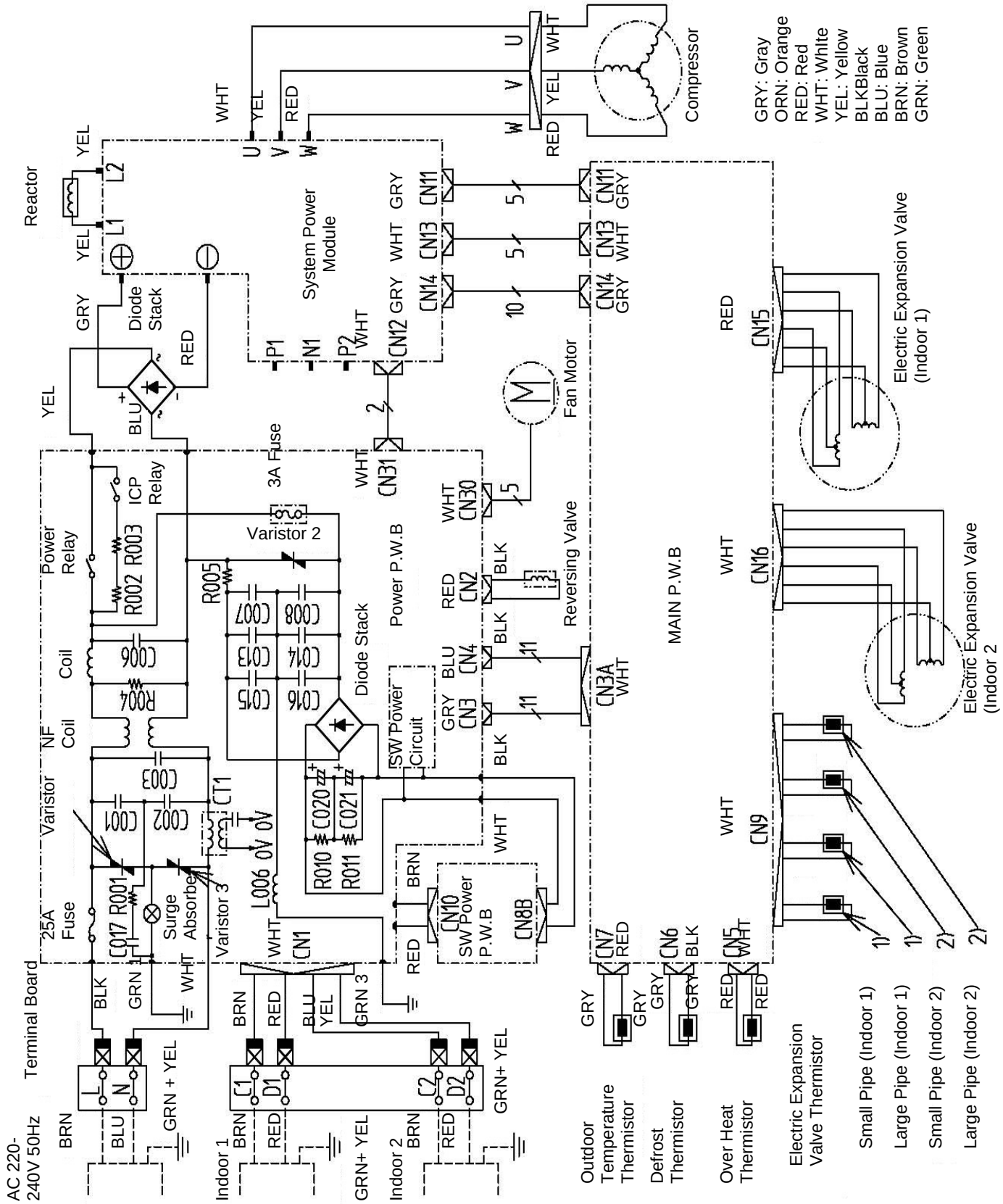
GRY: Gray
ORN: Orange
RED: Red
WHT: Whlte
YEL: Yellow
BLKBlack
BLU: Blue
BRN: Brown
GRN: Green
Compressor
Reactor
System Power Module
Diode Stack
Fan Motor
Electric Expansion Valve (Indoor 1)
Electric Expansion Valve (Indoor 2
Power Relay
ICP Relay
3A Fuse
Varistor 2
Coil
NF Coil
Varistor
25A Fuse
Surge Absorber
Varistor 3
Power P.W.B
Reversing Valve
MAIN P.W.B
SW Power Circuit
SW Power P.W.B
Terminal Board
AC 220-240V 50Hz
Indoor 1
Indoor 2
Outdoor Temperature Thermistor
Defrost Thermistor
Over Heat Thermistor
Electric Expansion Valve Thermistor
Small Pipe (Indoor 1)
Large Pipe (Indoor 1)
Small Pipe (Indoor 2)
Large Pipe (Indoor 2)

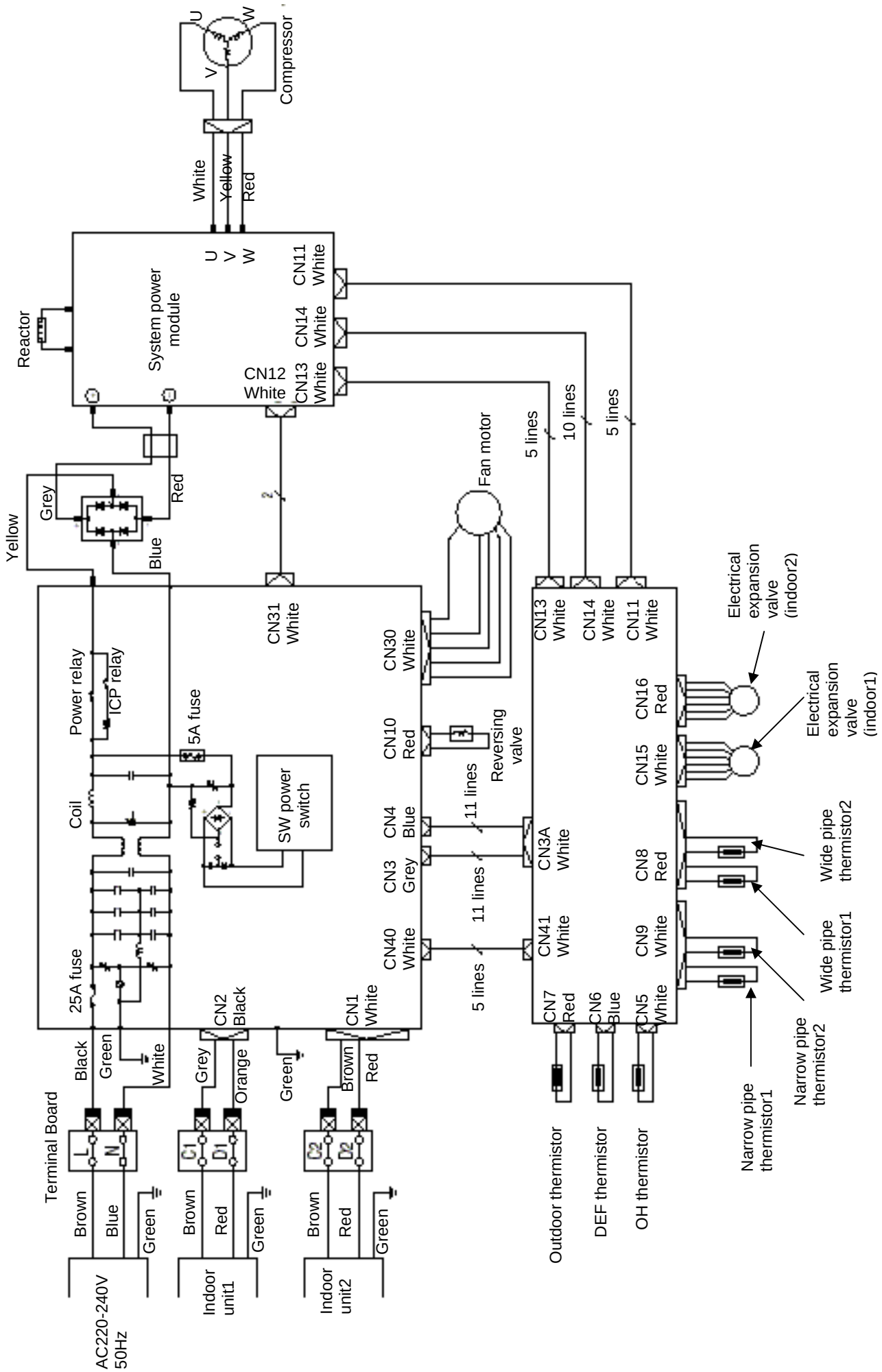
Compressor
U
V
W
White
Yellow
Red
System power module
Reactor
CN11 White
CN14 White
CN13 White
CN12 White
Fan motor
5 lines
10 lines
5 lines
Yellow
Grey
Blue
Red
CN31 White
CN30 White
CN13 White
CN14 White
CN11 White
Electrical expansion valve (indoor2)
Electrical expansion valve (indoor1)
Power relay
ICP relay
5A fuse
Coil
SW power switch
CN10 Red
Reversing valve
CN16 Red
CN15 White
CN4 Blue
CN3 Grey
CN40 White
11 lines
11 lines
5 lines
CN3A White
CN41 White
CN8 Red
CN9 White
Wide pipe thermistor2
Wide pipe thermistor1
25A fuse
CN2 Black
CN1 White
CN7 Red
CN6 Blue
CN5 White
Narrow pipe thermistor2
Narrow pipe thermistor1
Black
Green
White
Grey
Orange
Green
Brown
Red
Terminal Board
L
N
C1
D1
C2
D2
Brown
Blue
Green
Brown
Red
Green
Brown
Red
Green
Outdoor thermistor
DEF thermistor
OH thermistor
AC220-240V 50Hz
Indoor unit1
Indoor unit2

RAM-55QH5

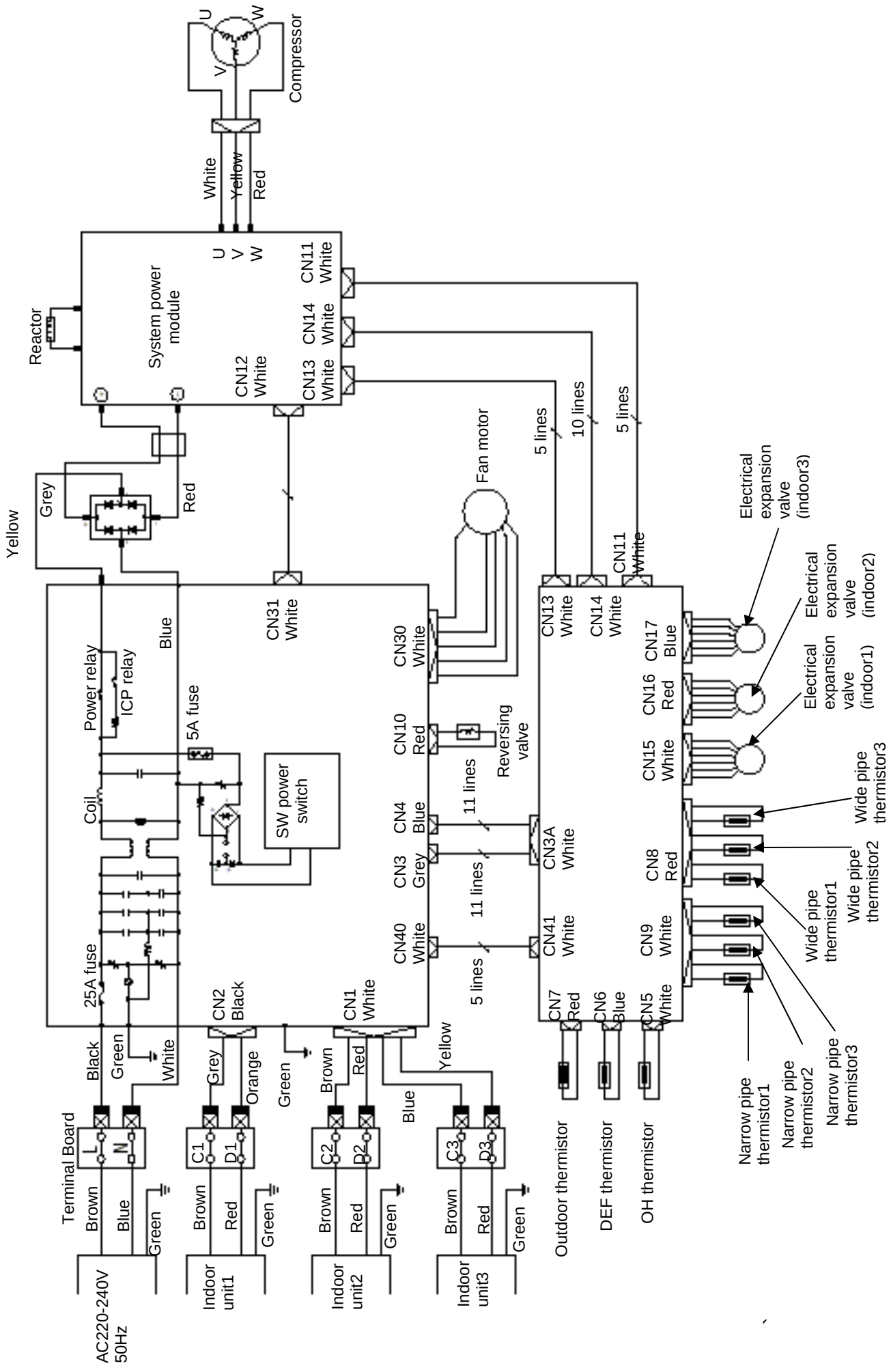
Compressor
U
V
W
White
Yellow
Red
System power module
Reactor
CN11 White
CN14 White
CN13 White
CN12 White
Fan motor
5 lines
10 lines
5 lines
Yellow
Grey
Red
Blue
CN31 White
Power relay
ICP relay
5A fuse
Coil
SW power switch
CN30 White
CN10 Red
Reversing valve
CN4 Blue
CN3 Grey
CN40 White
11 lines
11 lines
5 lines
CN13 White
CN14 White
CN11 White
CN3A White
CN41 White
CN7 Red
CN6 Blue
CN5 White
CN17 Blue
CN16 Red
CN15 White
CN8 Red
CN9 White
Electrical expansion valve (indoor3)
Electrical expansion valve (indoor2)
Electrical expansion valve (indoor1)
Wide pipe thermistor3
Wide pipe thermistor2
Wide pipe thermistor1
Narrow pipe thermistor3
Narrow pipe thermistor2
Narrow pipe thermistor1
25A fuse
CN2 Black
CN1 White
Black
Green
White
Grey
Orange
Green
Brown
Red
Blue
Yellow
Terminal Board
L
N
C1
D1
C2
D2
C3
D3
Brown
Blue
Green
Brown
Red
Green
Brown
Red
Green
Brown
Red
Green
Outdoor thermistor
DEF thermistor
OH thermistor
AC220-240V 50Hz
Indoor unit1
Indoor unit2
Indoor unit3

RAM-65QH5

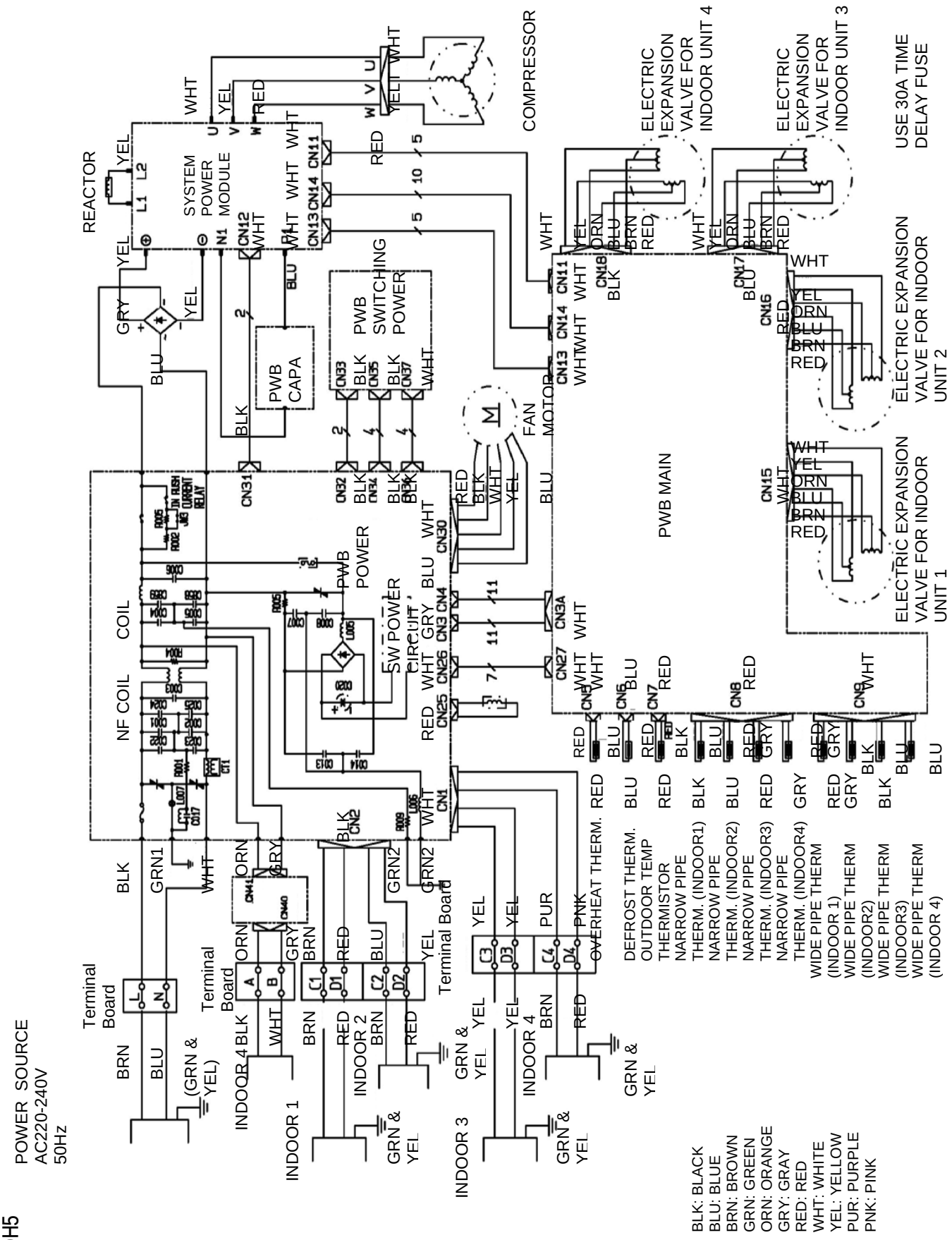
REACTOR
SYSTEM POWER MODULE
COMPRESSOR
ELECTRIC EXPANSION VALVE FOR INDOOR UNIT 4
ELECTRIC EXPANSION VALVE FOR INDOOR UNIT 3
USE 30A TIME DELAY FUSE
ELECTRIC EXPANSION VALVE FOR INDOOR UNIT 2
ELECTRIC EXPANSION VALVE FOR INDOOR UNIT 1
PWB CAPA
PWB SWITCHING POWER
FAN MOTOR
PWB MAIN
PWB POWER
SW POWER CIRCUIT
COIL
NF COIL
Terminal Board
INDOOR 1
INDOOR 2
INDOOR 3
INDOOR 4
DEFROST THERM.
OUTDOOR TEMP THERMISTOR
NARROW PIPE THERM. (INDOOR1)
NARROW PIPE THERM. (INDOOR2)
NARROW PIPE THERM. (INDOOR3)
NARROW PIPE THERM. (INDOOR4)
WIDE PIPE THERM (INDOOR 1)
WIDE PIPE THERM (INDOOR2)
WIDE PIPE THERM (INDOOR3)
WIDE PIPE THERM (INDOOR 4)
OVERHEAT THERM.
POWER SOURCE AC220-240V 50Hz
BLK: BLACK
BLU: BLUE
BRN: BROWN
GRN: GREEN
ORN: ORANGE
GRY: GRAY
RED: RED
WHT: WHITE
YEL: YELLOW
PUR: PURPLE
PNK: PINK

RAM-72QH5

RAS-18YH5, RAS-25YH5, RAS-35YH5

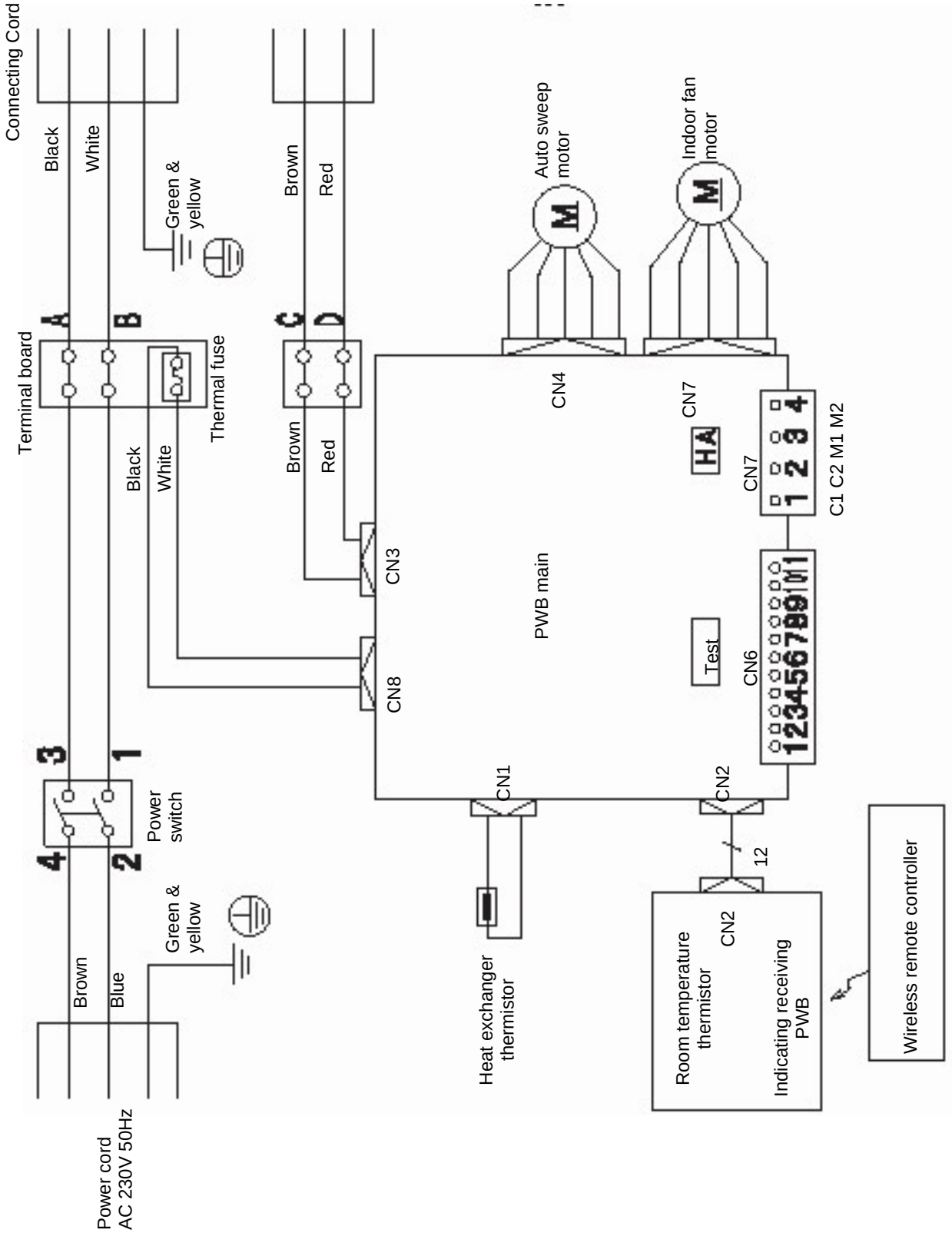

*Note: The mentioned models are using the same board assembly, change only in EEPROM data.

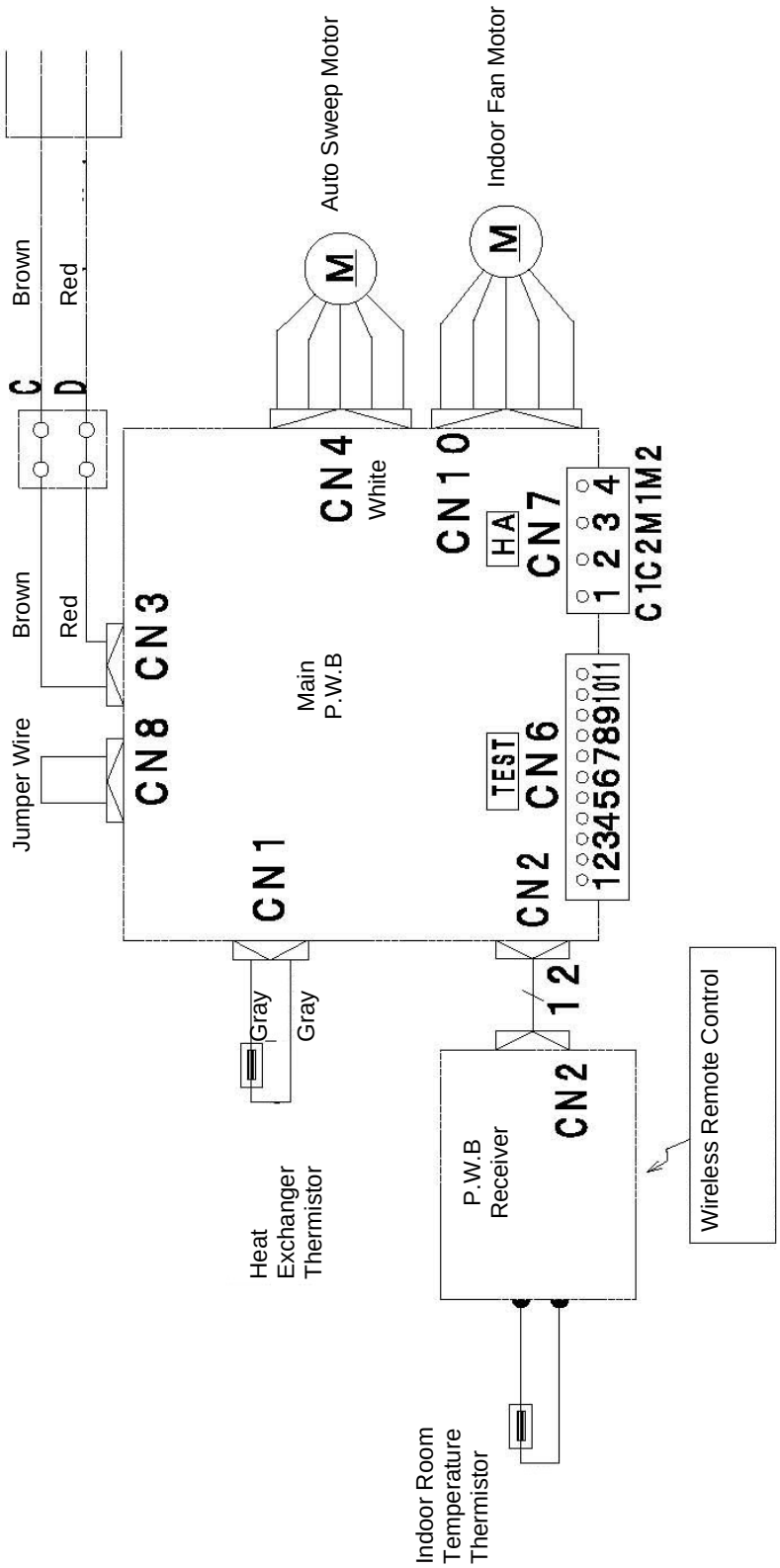
Auto Sweep Motor
Indoor Fan Motor
M
M
Brown
Red
C
D
Brown
Red
Jumper Wire
CN8
CN3
CN4
White
CN10
HA
CN7
1 2 3 4
C1C2M1M2
Main
P.W.B
TEST
CN6
1234567891011
CN1
CN2
Gray
Gray
1 2
CN2
P.W.B
Receiver
Wireless Remote Control
Heat
Exchanger
Thermistor
Indoor Room
Temperature
Thermistor

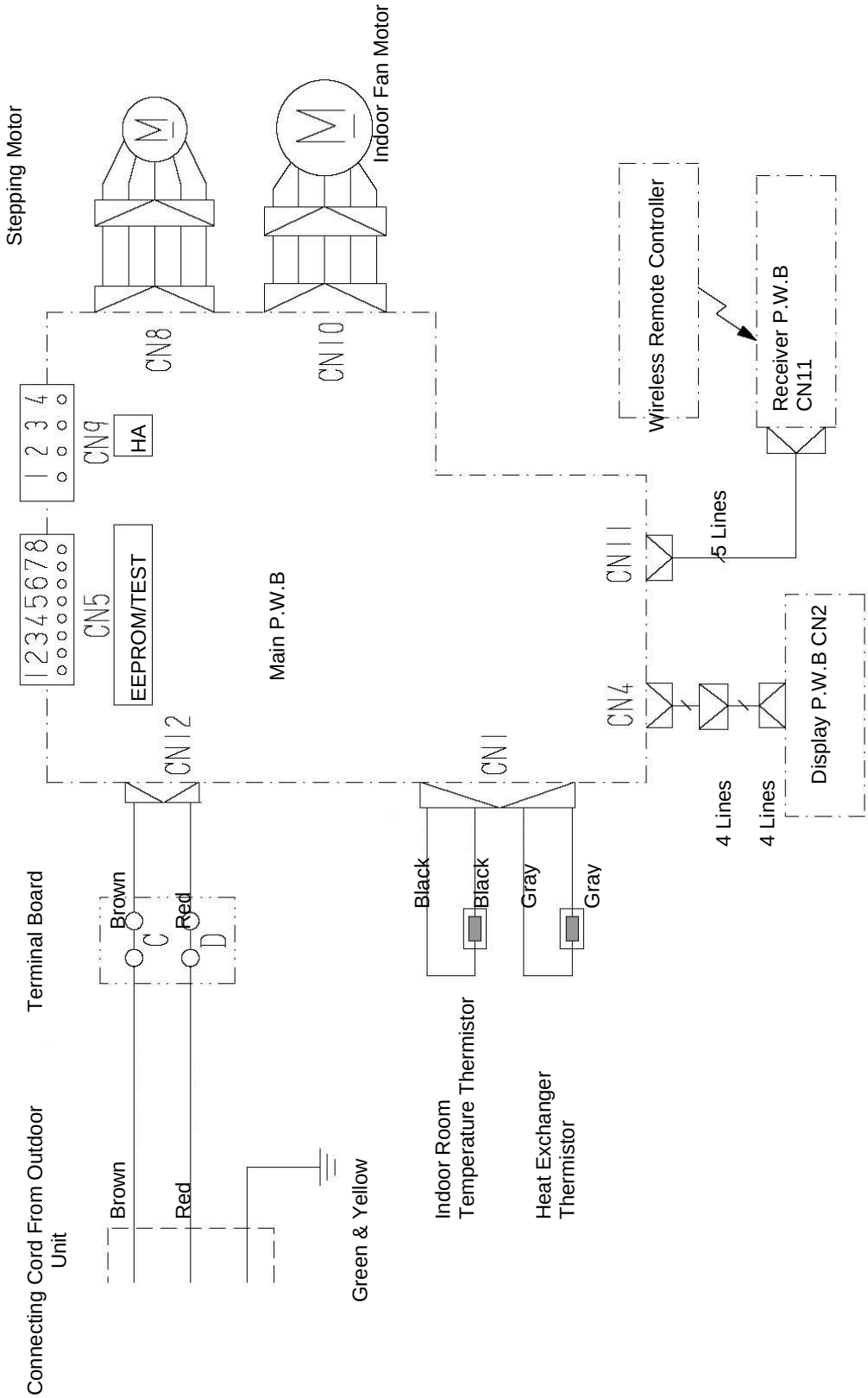
Stepping Motor
Indoor Fan Motor
CN8
CN10
1 2 3 4
CN9
HA
1 2 3 4 5 6 7 8
CN5
EEPROM/TEST
Main P.W.B
CN12
CN1
CN11
CN4
Wireless Remote Controller
Receiver P.W.B
CN11
5 Lines
Display P.W.B CN2
4 Lines
4 Lines
Terminal Board
Brown
Red
C
D
Black
Black
Gray
Gray
Connecting Cord From Outdoor Unit
Brown
Red
Green & Yellow
Indoor Room Temperature Thermistor
Heat Exchanger Thermistor

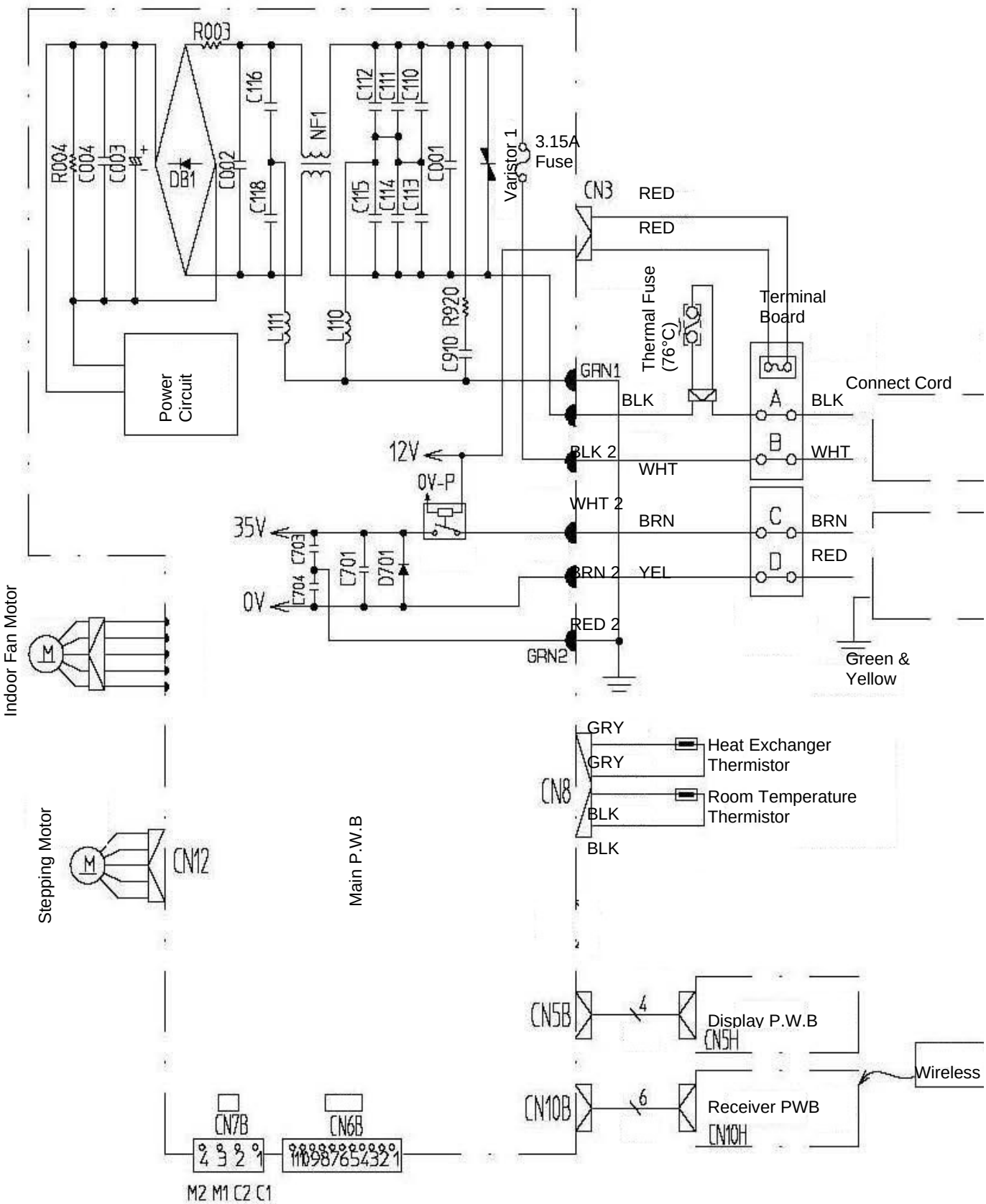
R003
R004
C004
C003
DB1
C002
C116
C118
NF1
C112
C111
C110
C115
C114
C113
C001
Varistor 1
3.15A
Fuse
CN3
RED
RED
Thermal Fuse
(76°C)
Terminal
Board
L111
L110
C910
R920
Power
Circuit
GRN1
BLK
Connect Cord
A
BLK
B
WHT
12V
BLK 2
WHT
0V-P
WHT 2
BRN
C
BRN
35V
C703
C704
C701
D701
BRN 2
YEL
D
RED
0V
RED 2
GRN2
Green &
Yellow
Indoor Fan Motor
M
GRY
Heat Exchanger
Thermistor
GRY
CN8
Room Temperature
Thermistor
BLK
BLK
Stepping Motor
M
CN12
Main P.W.B
CN5B
4
Display P.W.B
CN5H
Wireless
CN10B
6
Receiver PWB
CN10H
CN7B
CN6B
4 3 2 1
11 10 9 8 7 6 5 4 3 2 1
M2 M1 C2 C1

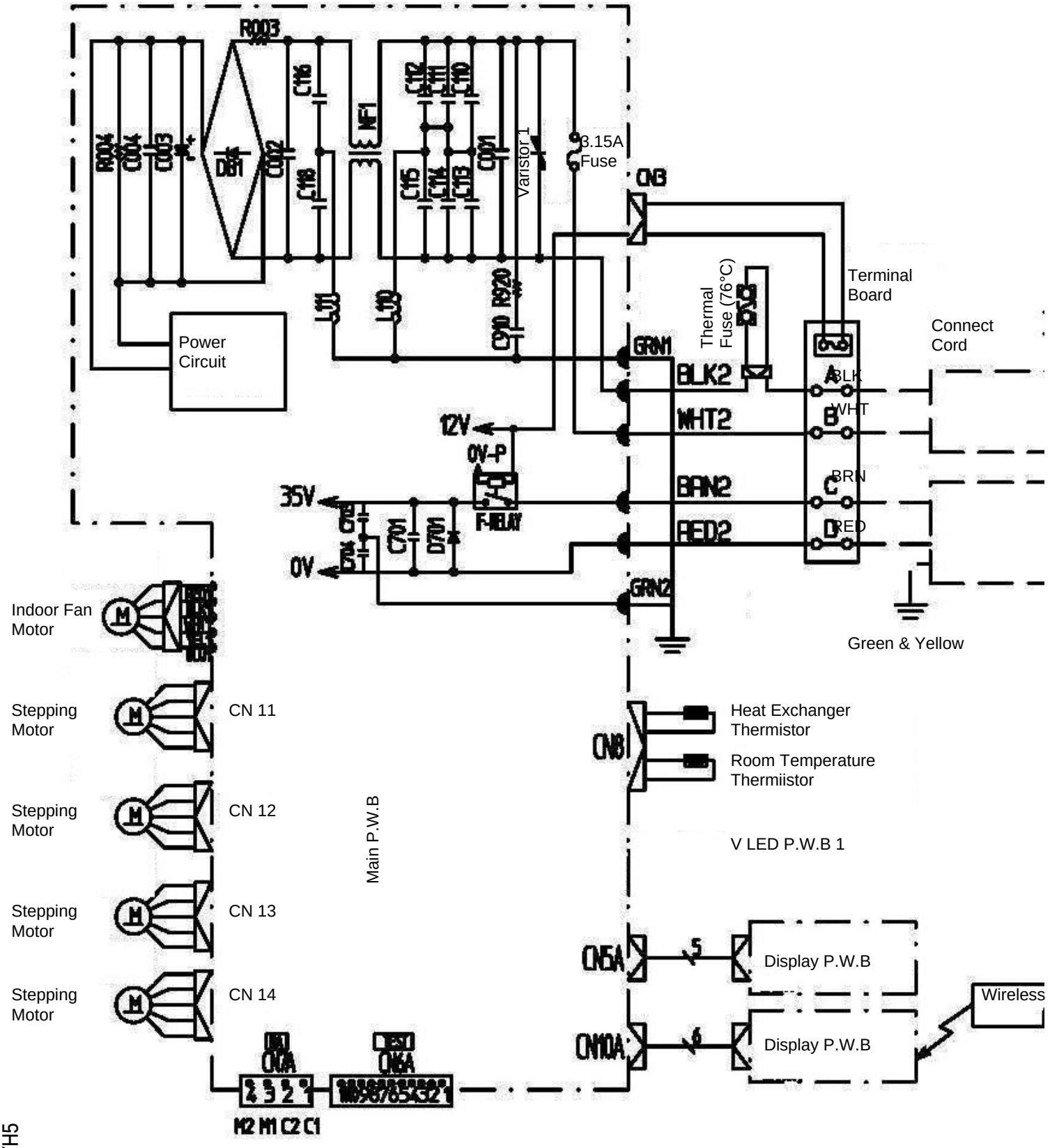
R003
DB1
MF1
Varistor 1
3.15A
Fuse
CN3
Power
Circuit
Thermal
Fuse (76°C)
Terminal
Board
Connect
Cord
GRN1
BLK2
WHT2
BRN2
RED2
GRN2
A BLK
B WHT
C BRN
D RED
12V
0V-P
35V
0V
F-RELAY
Green & Yellow
Indoor Fan
Motor
Stepping
Motor
CN 11
CN 12
CN 13
CN 14
Main P.W.B
CN8
Heat Exchanger
Thermistor
Room Temperature
Thermiistor
V LED P.W.B 1
CN5A
CN10A
Display P.W.B
Display P.W.B
Wireless
M2 M1 C2 C1

RAC-18YH5, RAC-25YH5, RAC-35YH5

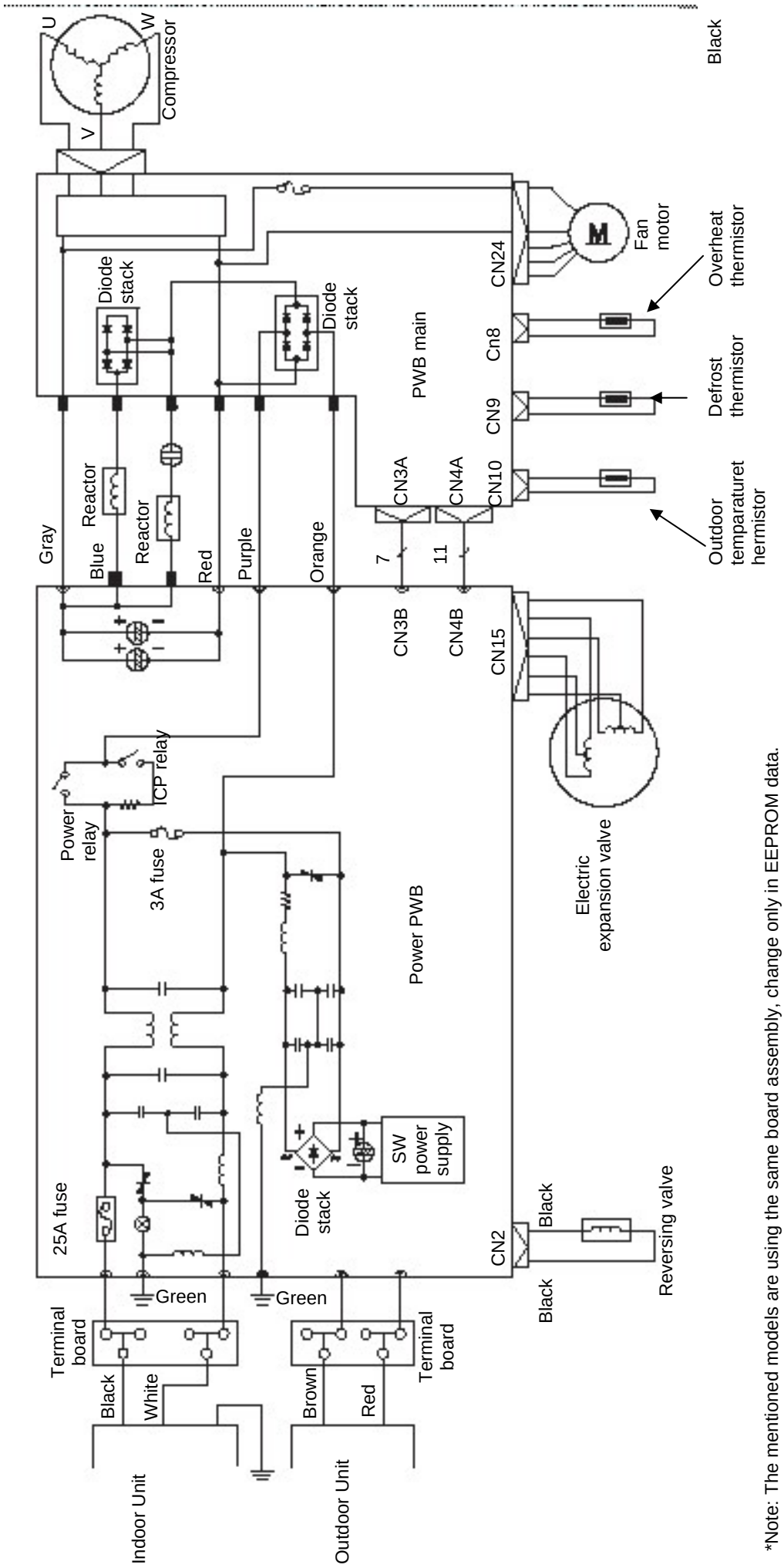

*Note: The mentioned models are using the same board assembly, change only in EEPROM data.

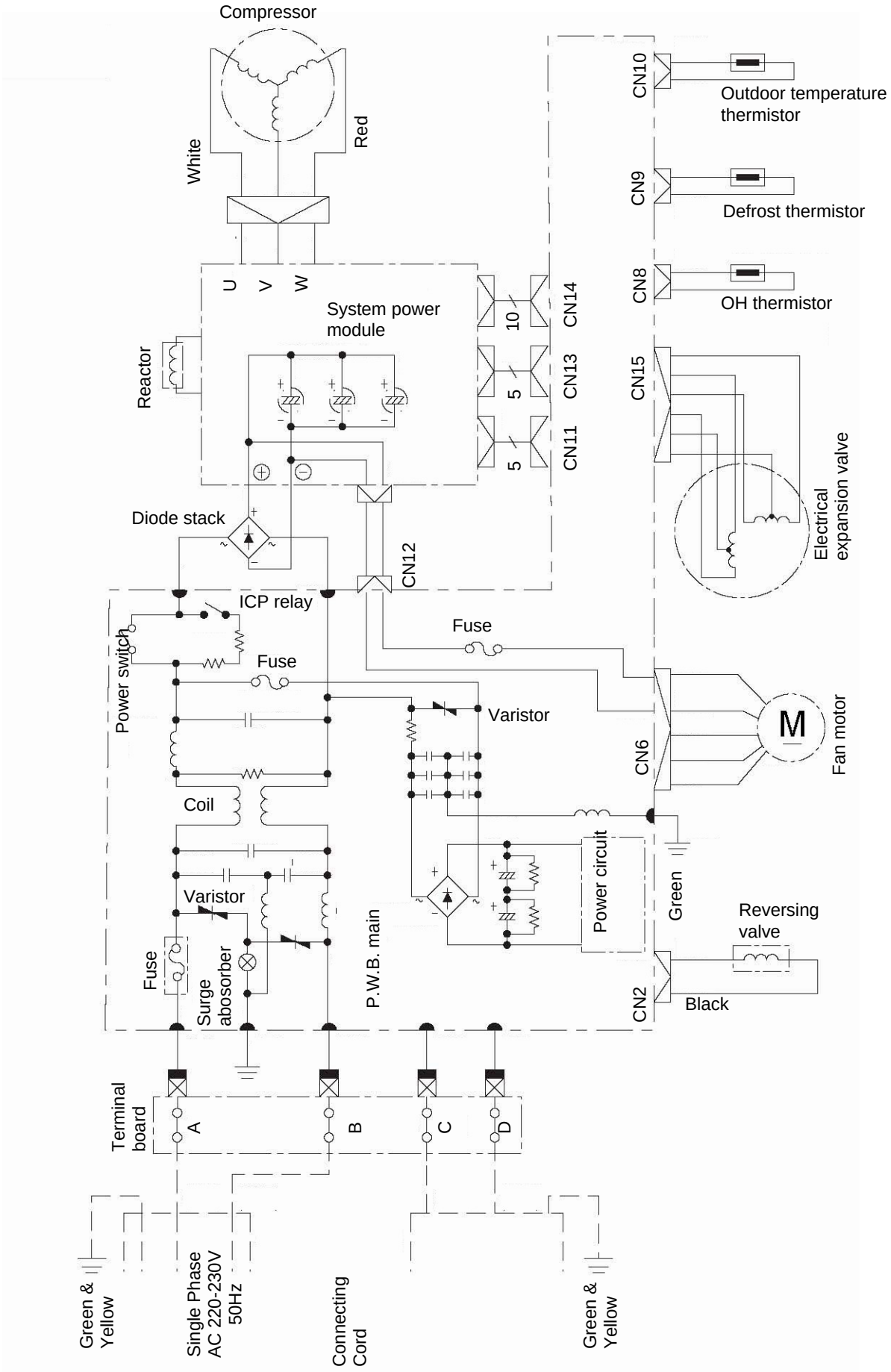
Compressor
White
Red
U
V
W
System power module
Reactor
Diode stack
CN12
CN14
CN13
CN11
10
5
5
CN10
CN9
CN8
CN15
CN6
CN2
Outdoor temperature thermistor
Defrost thermistor
OH thermistor
Electrical expansion valve
Fan motor
M
Green
Black
Reversing valve
Power circuit
Varistor
Fuse
ICP relay
Power switch
Coil
Surge abosorber
P.W.B. main
Terminal board
A
B
C
D
Green & Yellow
Single Phase AC 220-230V 50Hz
Connecting Cord
Green & Yellow

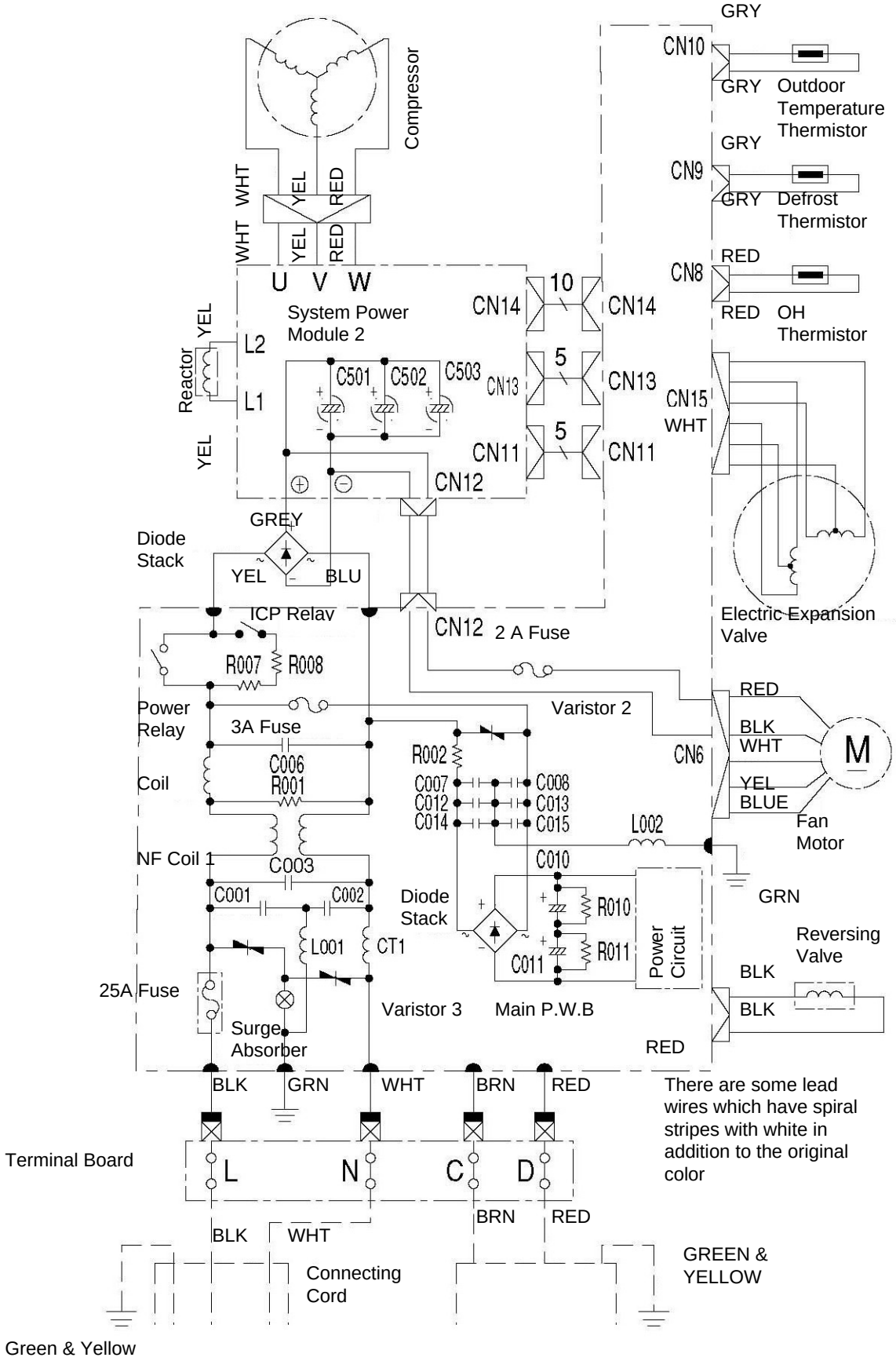
Compressor
WHT
YEL
RED
WHT
YEL
RED
U V W
System Power Module 2
Reactor
YEL
L2
L1
YEL
C501
C502
C503
CN14
CN13
CN11
CN12
10
5
5
CN14
CN13
CN11
GRY
CN10
GRY
Outdoor Temperature Thermistor
GRY
CN9
GRY
Defrost Thermistor
RED
CN8
RED
OH Thermistor
CN15
WHT
Electric Expansion Valve
GREY
Diode Stack
YEL
BLU
ICP Relay
CN12
2 A Fuse
R007
R008
Power Relay
3A Fuse
Varistor 2
RED
BLK
WHT
YEL
BLUE
M
CN6
Coil
C006
R001
R002
C007
C012
C014
C008
C013
C015
L002
Fan Motor
NF Coil 1
C003
C010
C001
C002
Diode Stack
R010
R011
C011
Power Circuit
GRN
L001
CT1
Reversing Valve
BLK
25A Fuse
Varistor 3
Main P.W.B
BLK
Surge Absorber
RED
BLK
GRN
WHT
BRN
RED
There are some lead wires which have spiral stripes with white in addition to the original color
Terminal Board
L
N
C
D
BRN
RED
BLK
WHT
Connecting Cord
GREEN & YELLOW
Green & Yellow

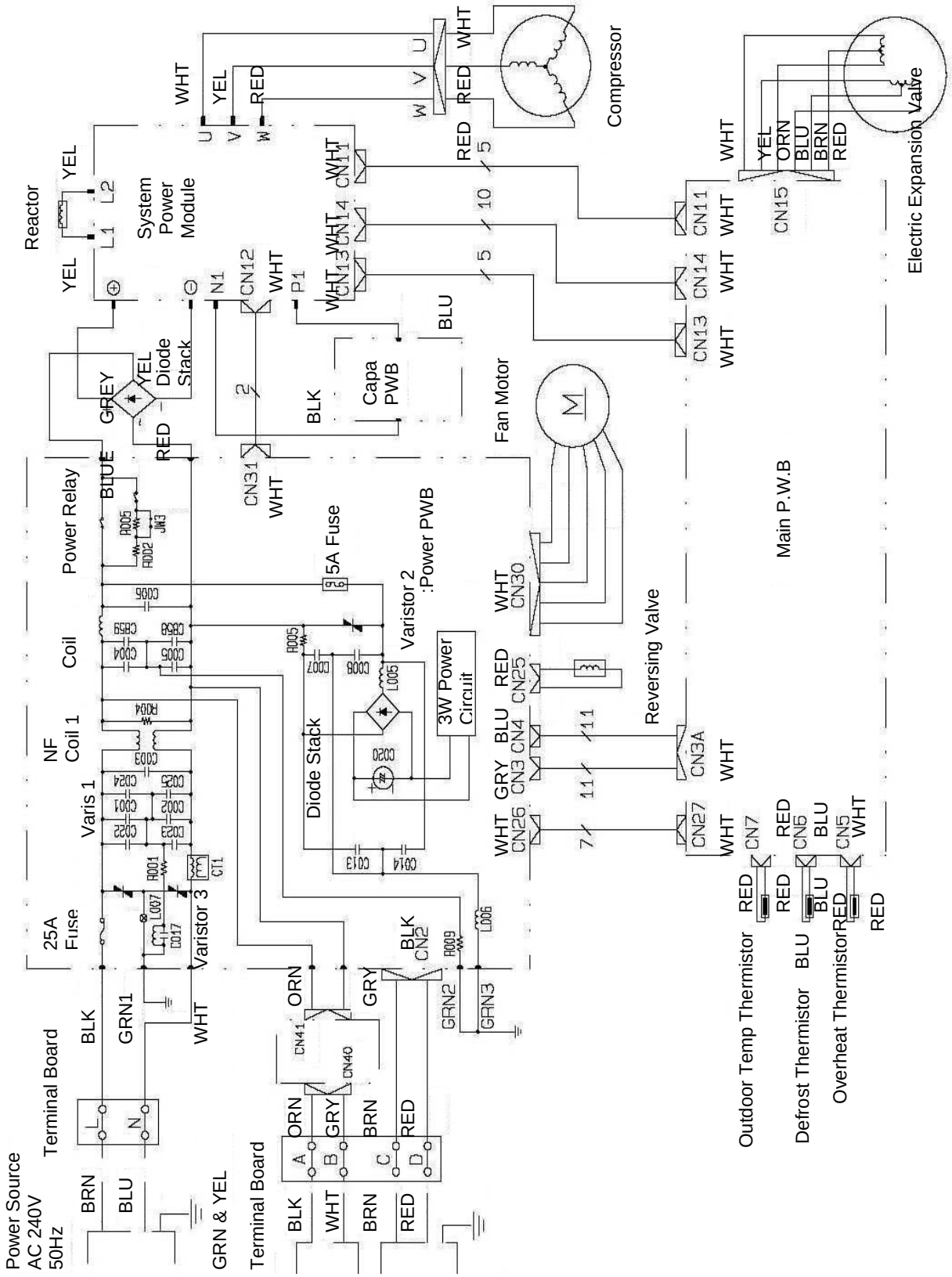
Power Source
AC 240V
50Hz
Terminal Board
Reactor
System Power Module
Diode Stack
Power Relay
Coil
NF Coil 1
Varis 1
25A Fuse
Varistor 3
Varistor 2
5A Fuse
:Power PWB
3W Power Circuit
Diode Stack
Capa PWB
Fan Motor
Compressor
Reversing Valve
Main P.W.B
Electric Expansion Valve
Outdoor Temp Thermistor
Defrost Thermistor
Overheat Thermistor
Terminal Board

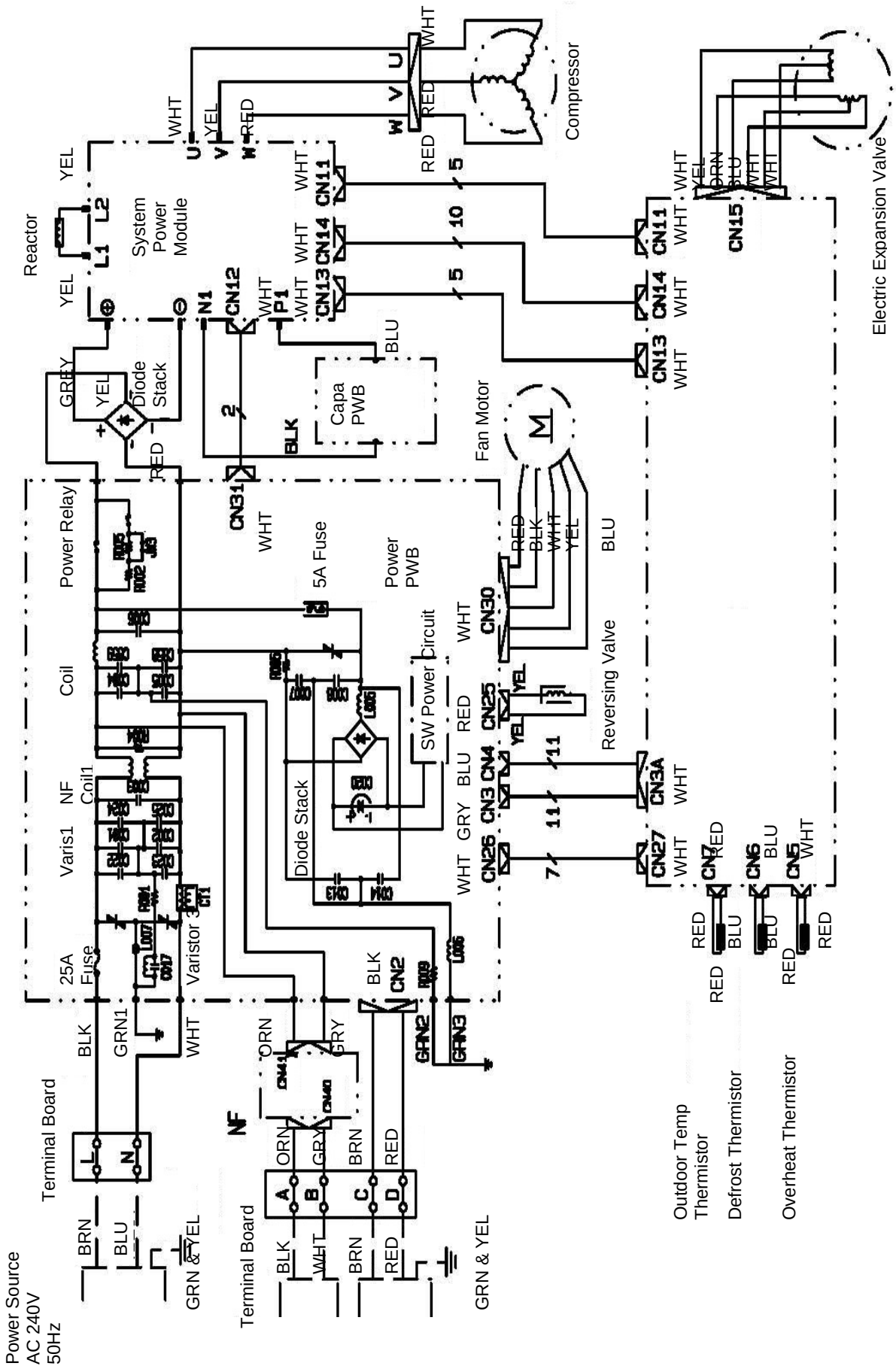
Power Source
AC 240V
50Hz
Terminal Board
Reactor
System
Power
Module
Diode
Stack
Power Relay
Coil
NF
Coil1
Varis1
25A
Fuse
Varistor 3
Capa
PWB
Fan Motor
5A Fuse
Power
PWB
SW Power Circuit
Diode Stack
Reversing Valve
Compressor
Electric Expansion Valve
Outdoor Temp
Thermistor
Defrost Thermistor
Overheat Thermistor
GRN & YEL
BRN
BLU
BLK
WHT
GRN1
ORN
GRY
RED
YEL
GREY
CN11
CN12
CN13
CN14
CN15
CN31
CN30
CN25
CN4
CN3
CN26
CN3A
CN27
CN7
CN6
CN5
CN2
GRN2
GRN3
N1
P1
L1
L2
U
V
W
A
B
C
D
L
N
NF

RAC-80YH5

RAS/RAC-07G4, RAS/RAC-09G4, RAS/RAC-14G4

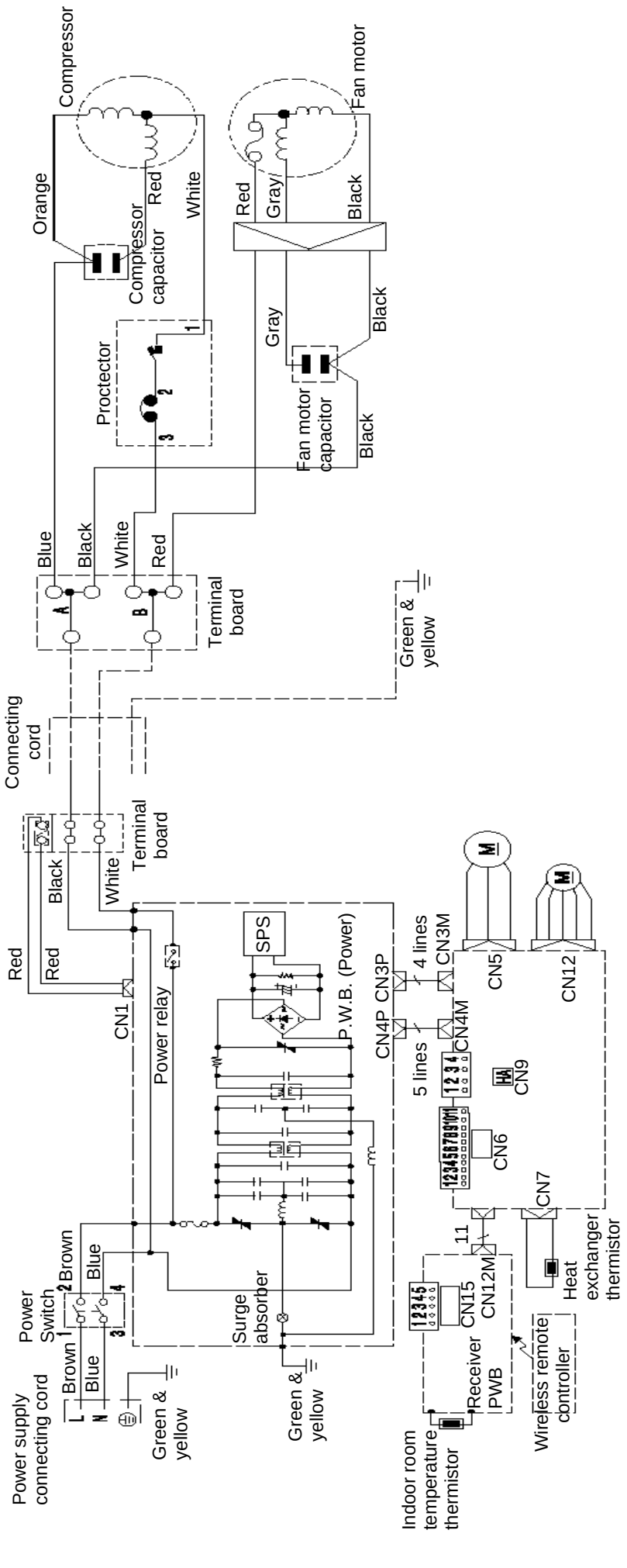

*Note: The mentioned models are using the same board assembly, change only in EEPROM data.

RAS/RAC-18G4, RAS/RAC-24G4

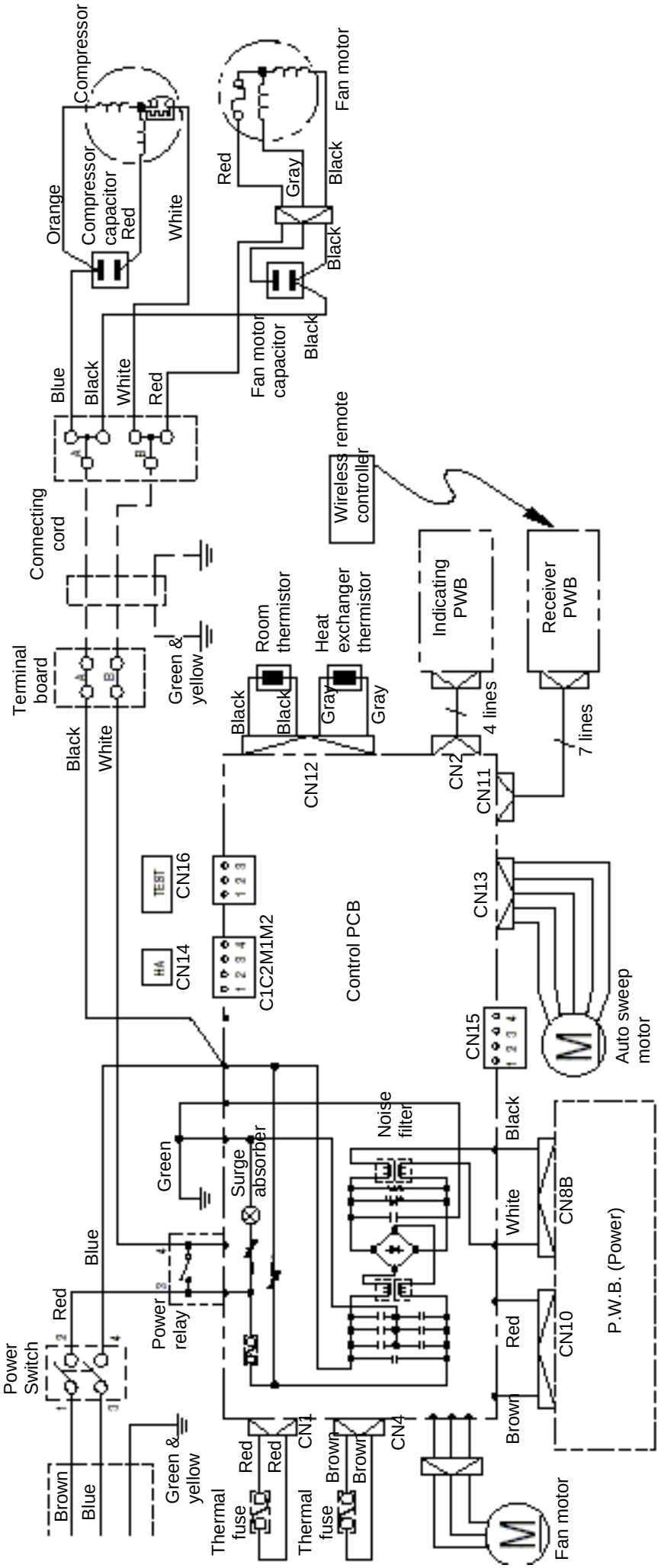

*Note: The mentioned models are using the same board assembly, change only in EEPROM data.

RAS/RAC-07GH4, RAS/RAC-09GH4, RAS/RAC-14GH4

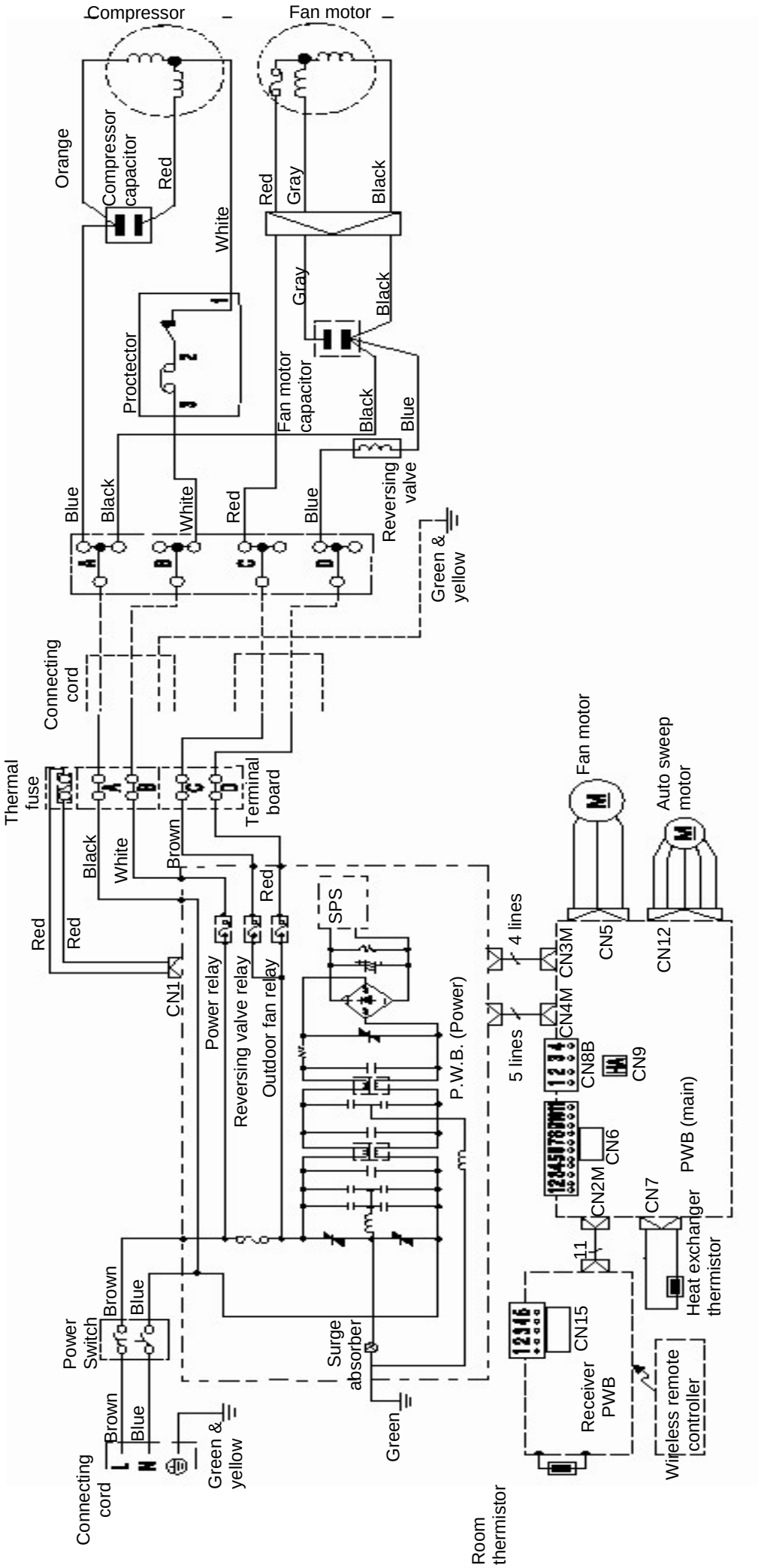

*Note: The mentioned models are using the same board assembly, change only in EEPROM data.

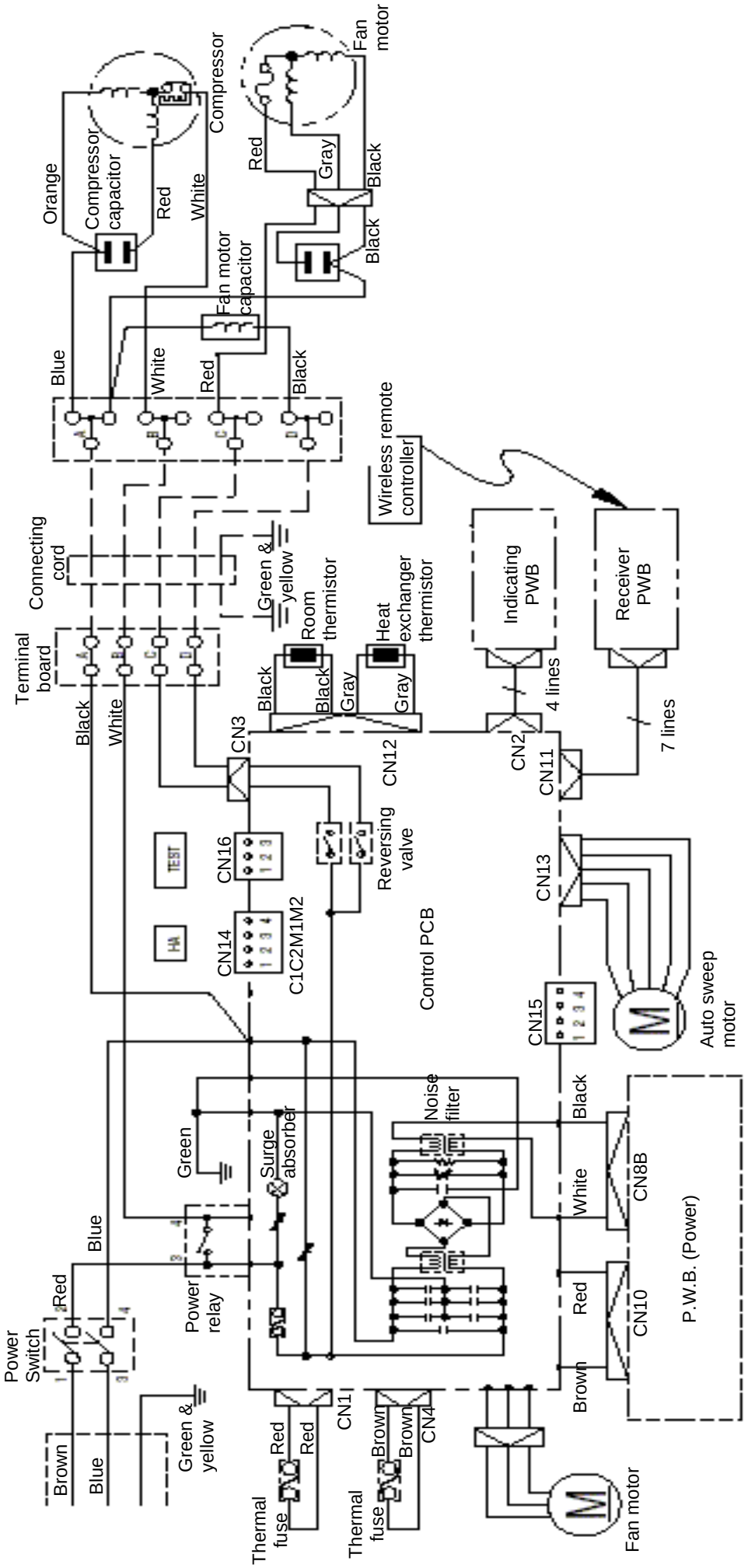

*Note: The mentioned models are using the same board assembly, change only in EEPROM data.

8 REFRIGERANT CYCLE

CONTENTS

8 REFRIGERANT CYCLE 8-1

8.1. Monozone/Multizone Indoor Units 8-2

8.1.1. RAK-18NH5, RAK-25NH5, RAK-35NH5, RAK-50NH5 8-2
8.1.2. RAK-65NH5 8-3
8.1.3. RAI-25NH5, RAI-35NH5 , RAI-50NH5 8-4
8.1.4. RAF-25NH5, RAF-35NH5, RAF-50NH5 8-5
8.1.5. RAD-25NH5, RAD-35NH5 8-6

8.2. Monozone/Multizone Outdoor Units 8-7

8.2.1. RAC-25NH5, RAC-35NH5 8-7
8.2.2. RAC-50NH5 8-8
8.2.3. RAC-65NH5 8-9
8.2.4. RAM-40QH5 8-10
8.2.5. RAM-55QH5 8-11
8.2.6. RAM-65QH5 8-12
8.2.7. RAM-72QH5 8-13
8.2.8. RAM-80QH5 8-14

8.3. Inverter Split Units 8-15

8.3.1. RAS/RAC-18YH5 8-15
8.3.2. RAS/RAC-25YH5 8-16
8.3.3. RAS/RAC-35YH5 8-17
8.3.4. RAS/RAC-50YH5 8-18
8.3.5. RAS/RAC-60YH5 8-19
8.3.6. RAS/RAC-70YH5 8-20
8.3.7. RAS/RAC-80YH5 8-21

8.4. Constant Speed Split Units 8-22

8.4.1. RAS/RAC-07G4 8-22
8.4.2. RAS/RAC-09G4 8-23
8.4.3. RAS/RAC-14G4 8-24
8.4.4. RAS/RAC-18G4 8-25
8.4.5. RAS/RAC-24G4 8-26
8.4.6. RAS/RAC-07GH4 8-27
8.4.7. RAS/RAC-09GH4 8-28
8.4.8. RAS/RAC-14GH4 8-29
8.4.9. RAS/RAC-18GH4 8-30
8.4.10. RAS/RAC-24GH4 8-31

8.1. MONOZONE/MULTIZONE INDOOR UNITS

8.1.1. RAK-18NH5, RAK-25NH5, RAK-35NH5, RAK-50NH5

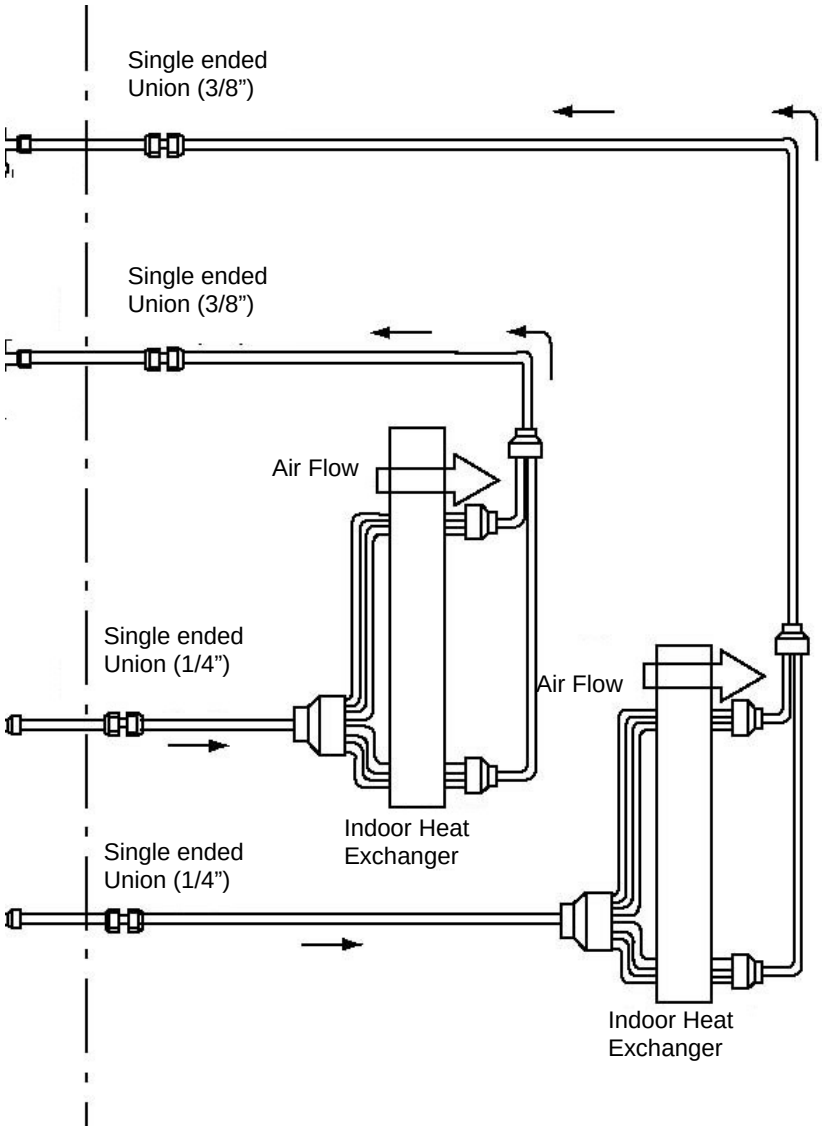

8.1.2.

8.1.2. RAK-65NH5

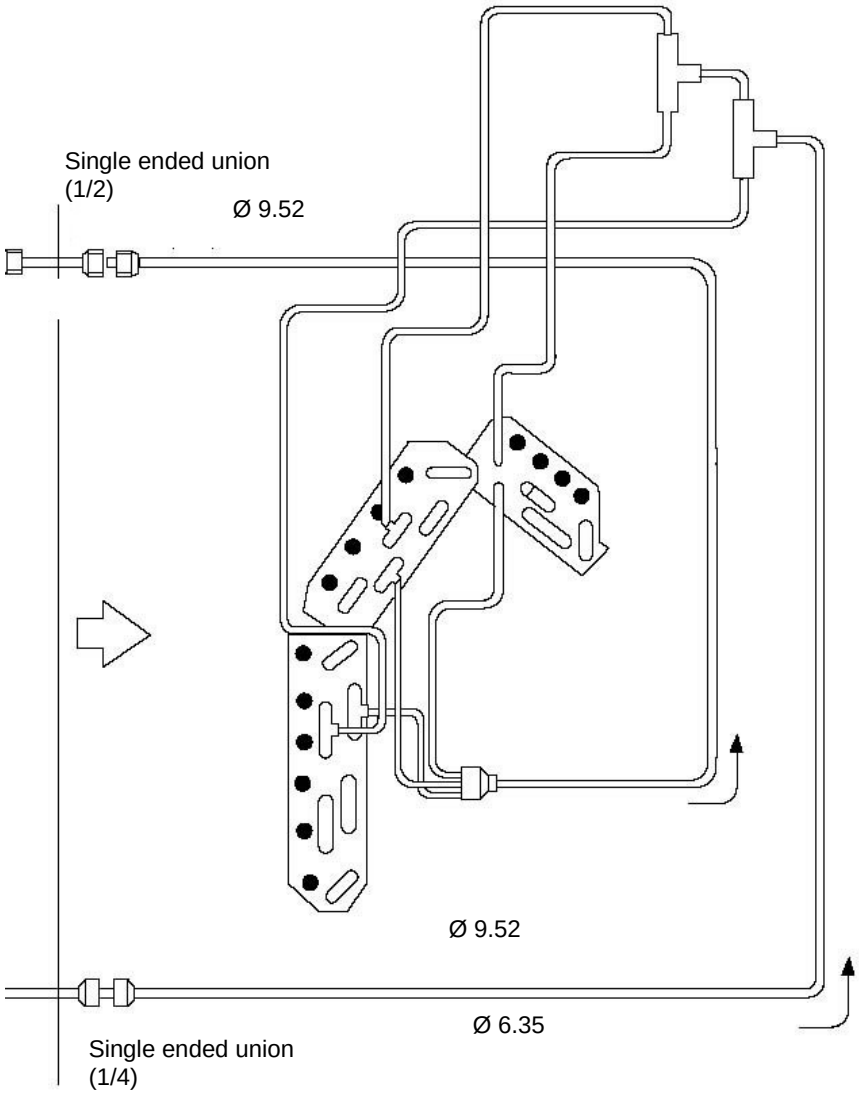

8.1.3. RAI-25NH5, RAI-35NH5 , RAI-50NH5

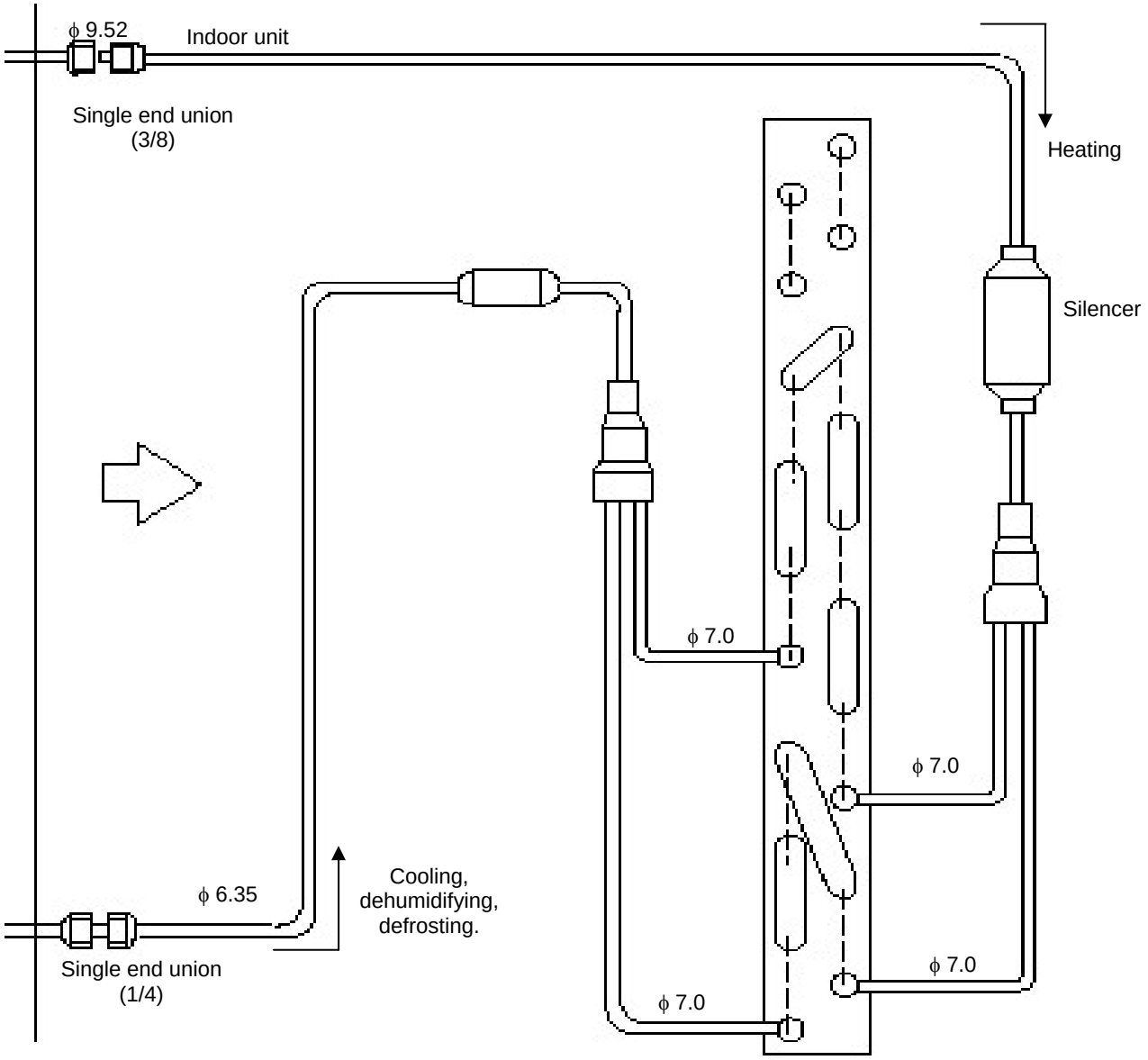

8.1.4. RAF-25NH5, RAF-35NH5, RAF-50NH5

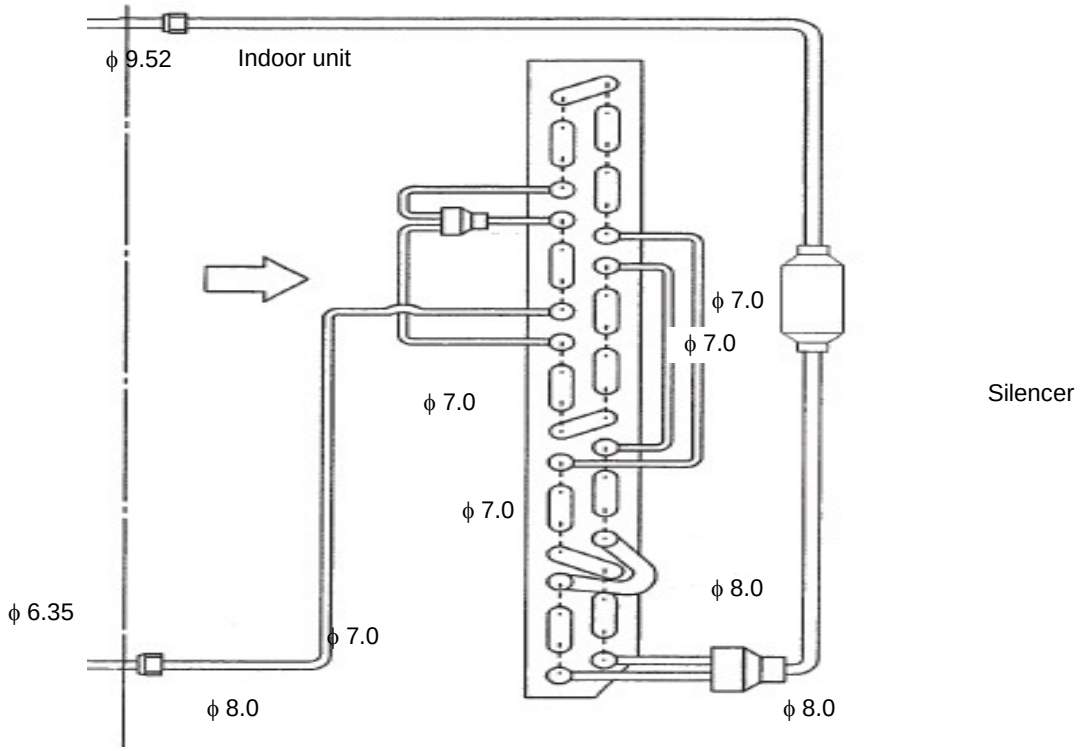

8.1.5. RAD-25NH5, RAD-50NH5

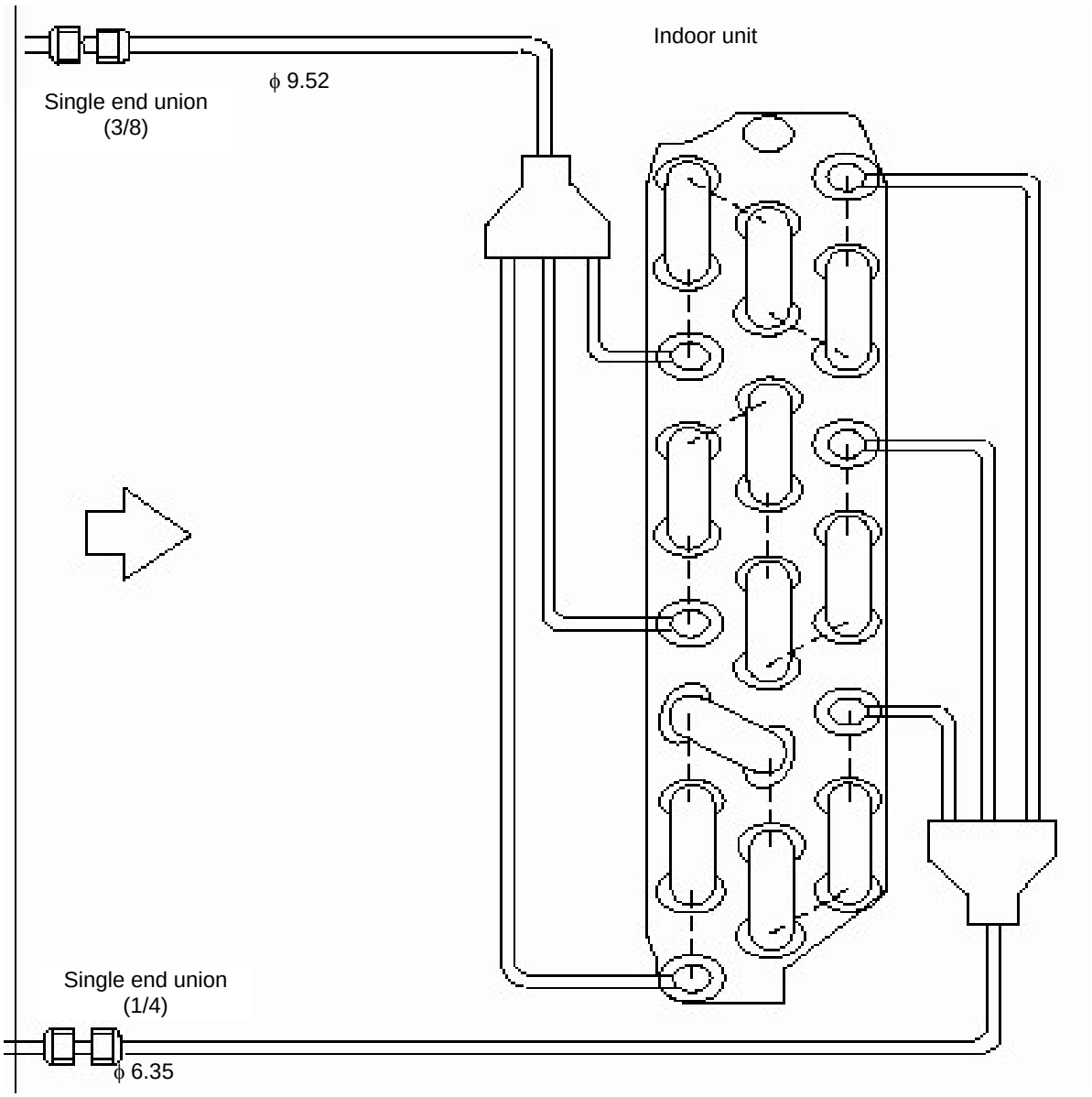

8.2. MONOZONE/MULTIZONE OUTDOOR UNITS

8.2.1. RAC-25NH5, RAC-35NH5

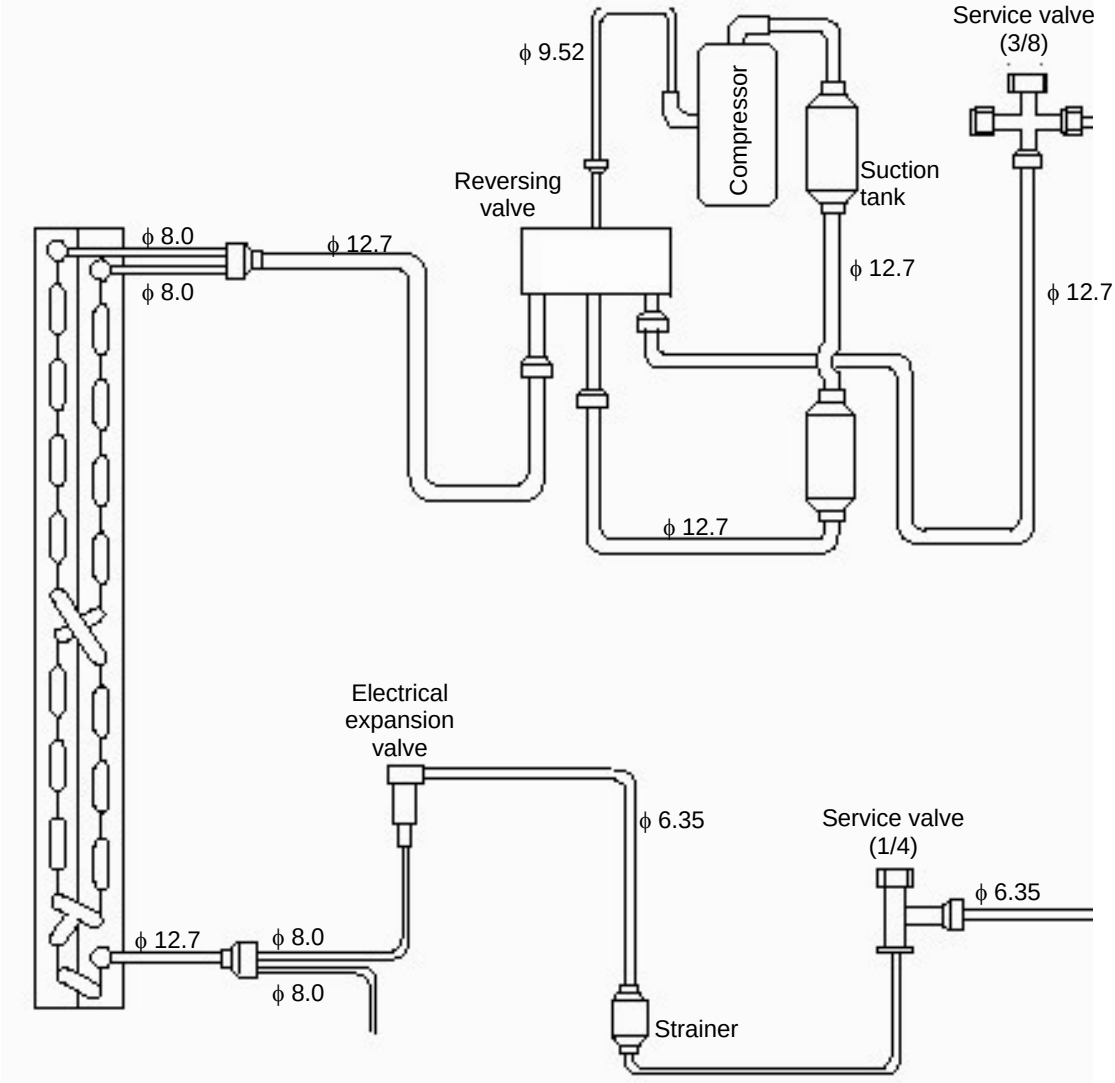

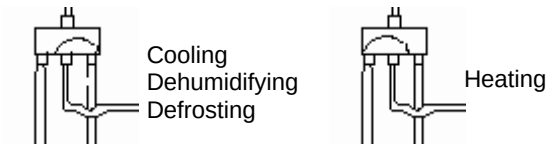

RAC-25/35NH5 reversing valve position

8.2.2. RAC-50NH5

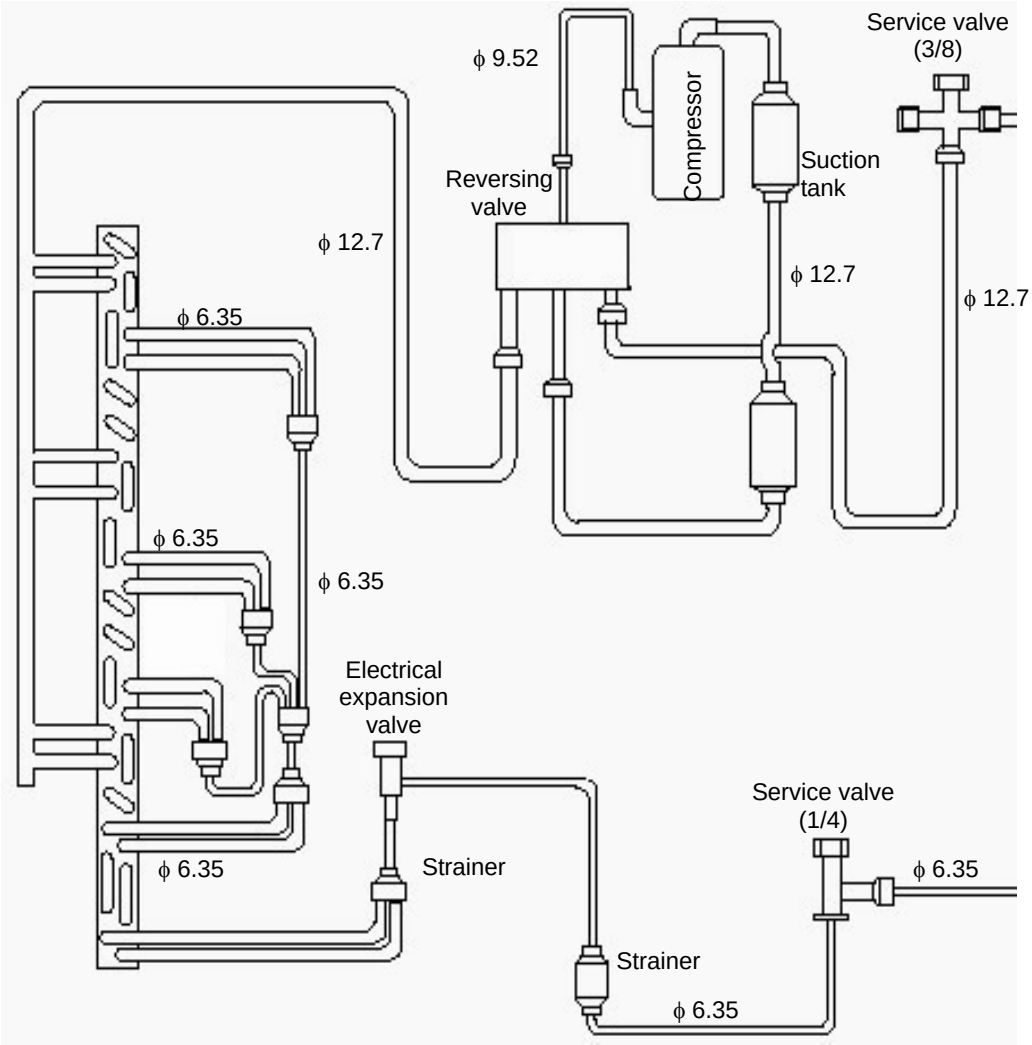

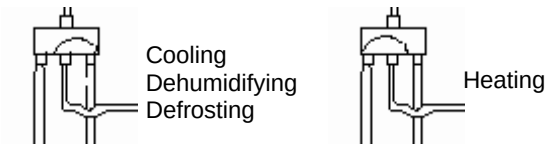

RAM-50NH5 reversing valve position

8.2.3. RAC-65NH5

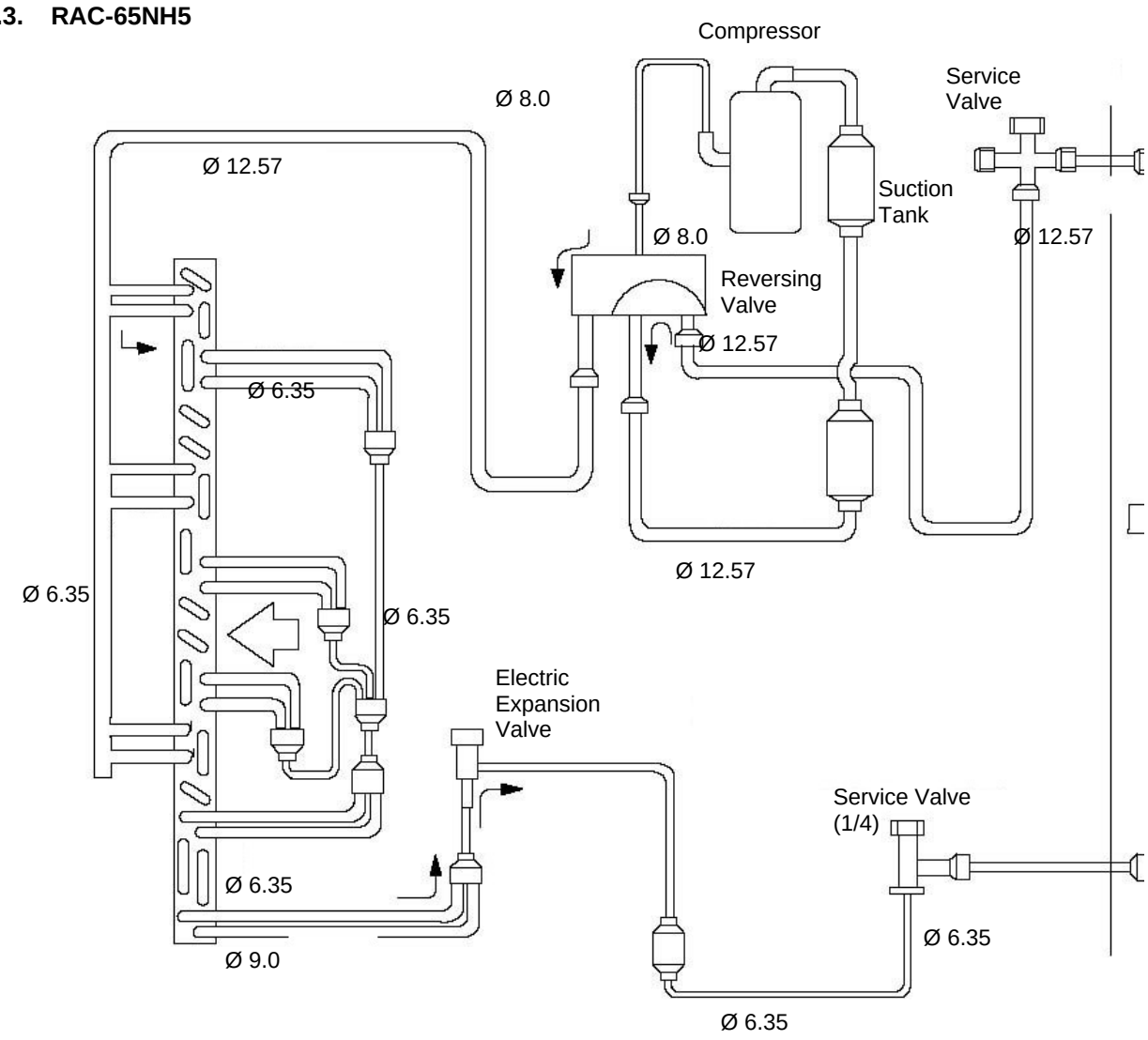

8.2.4. RAM-40QH5

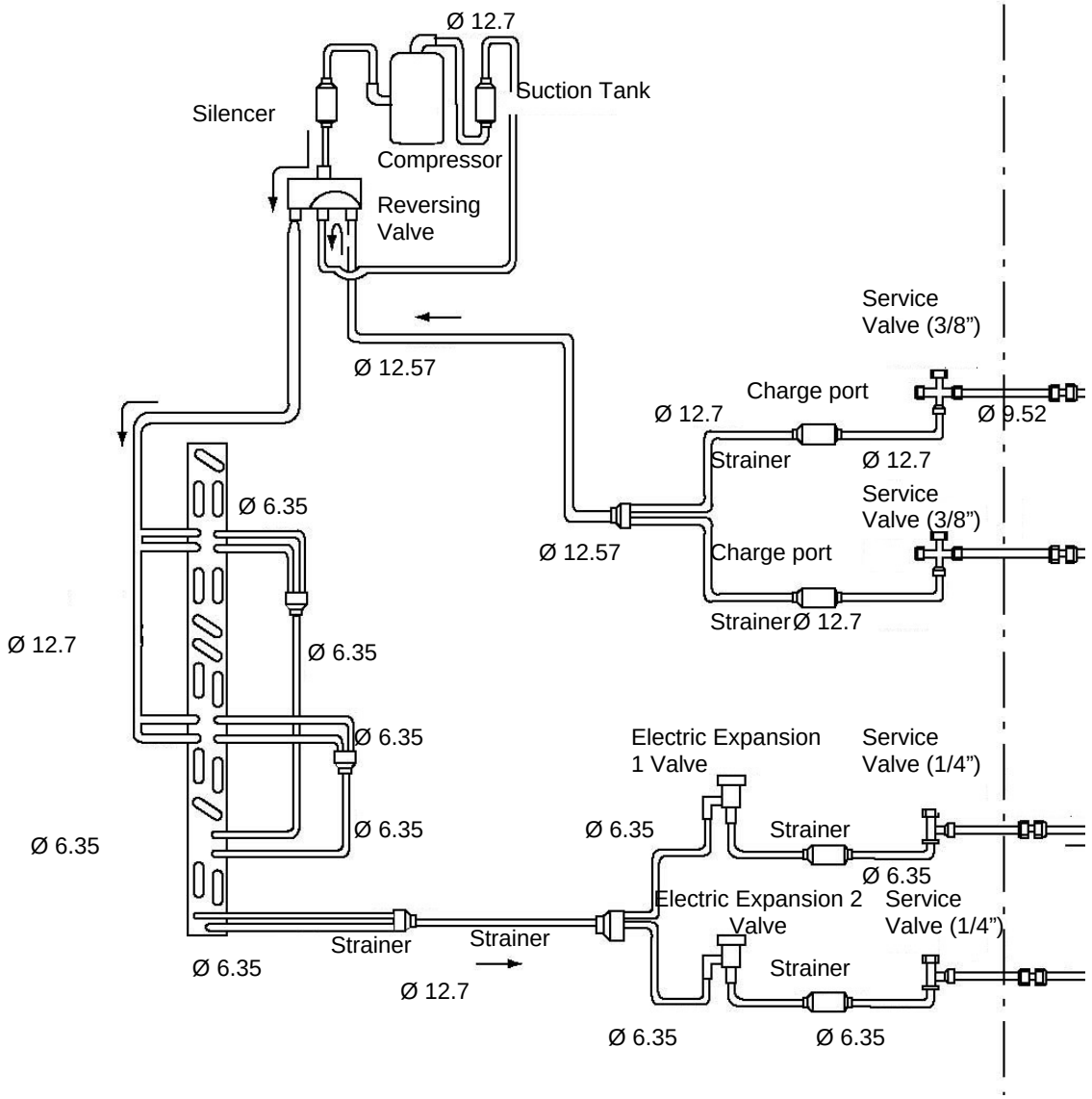

8.2.5. RAM-55QH5

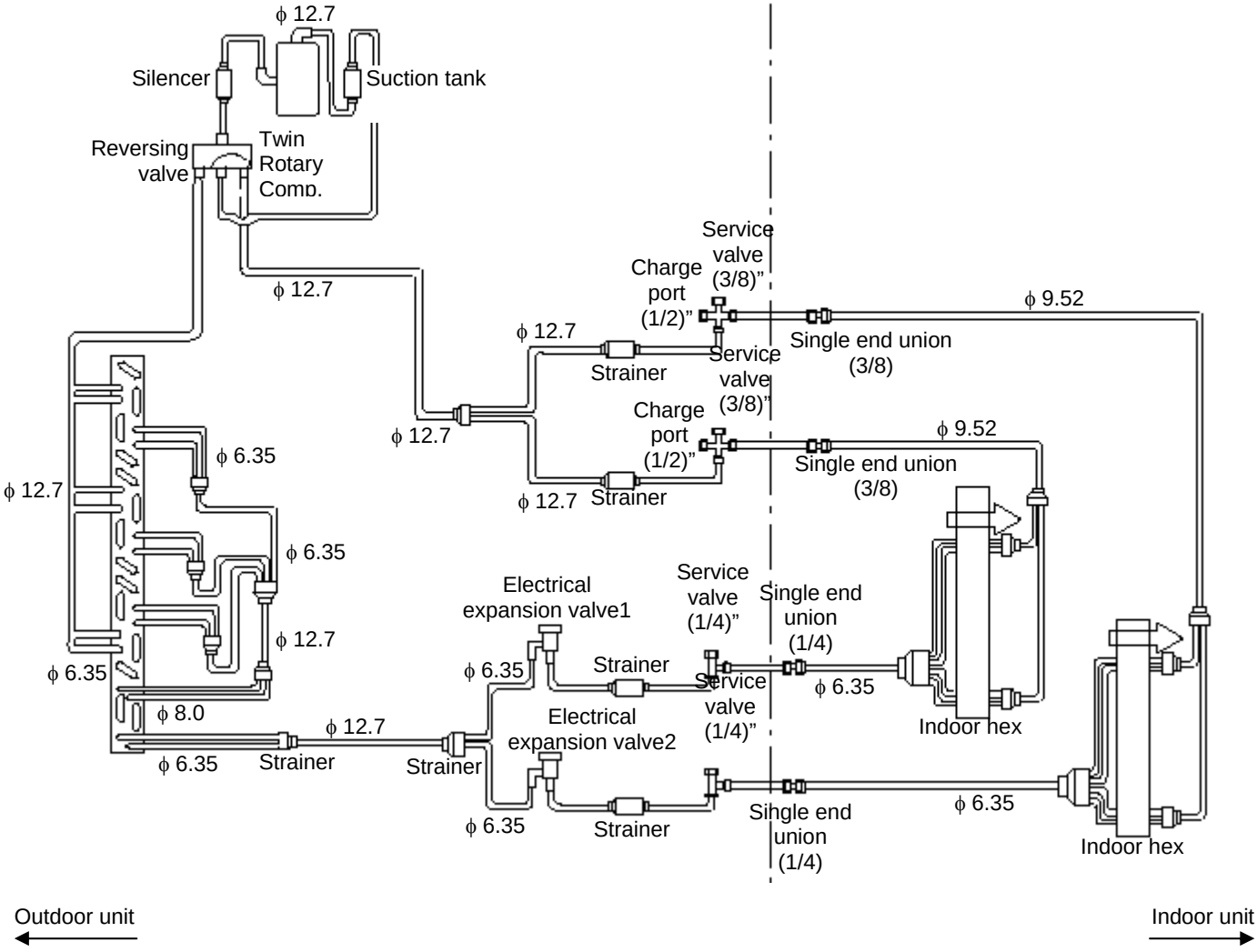

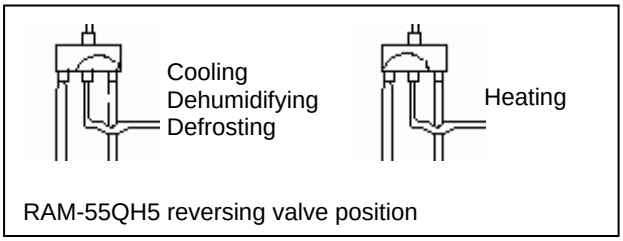

RAM-55QH5 reversing valve position

8.2.6. RAM-65QH5

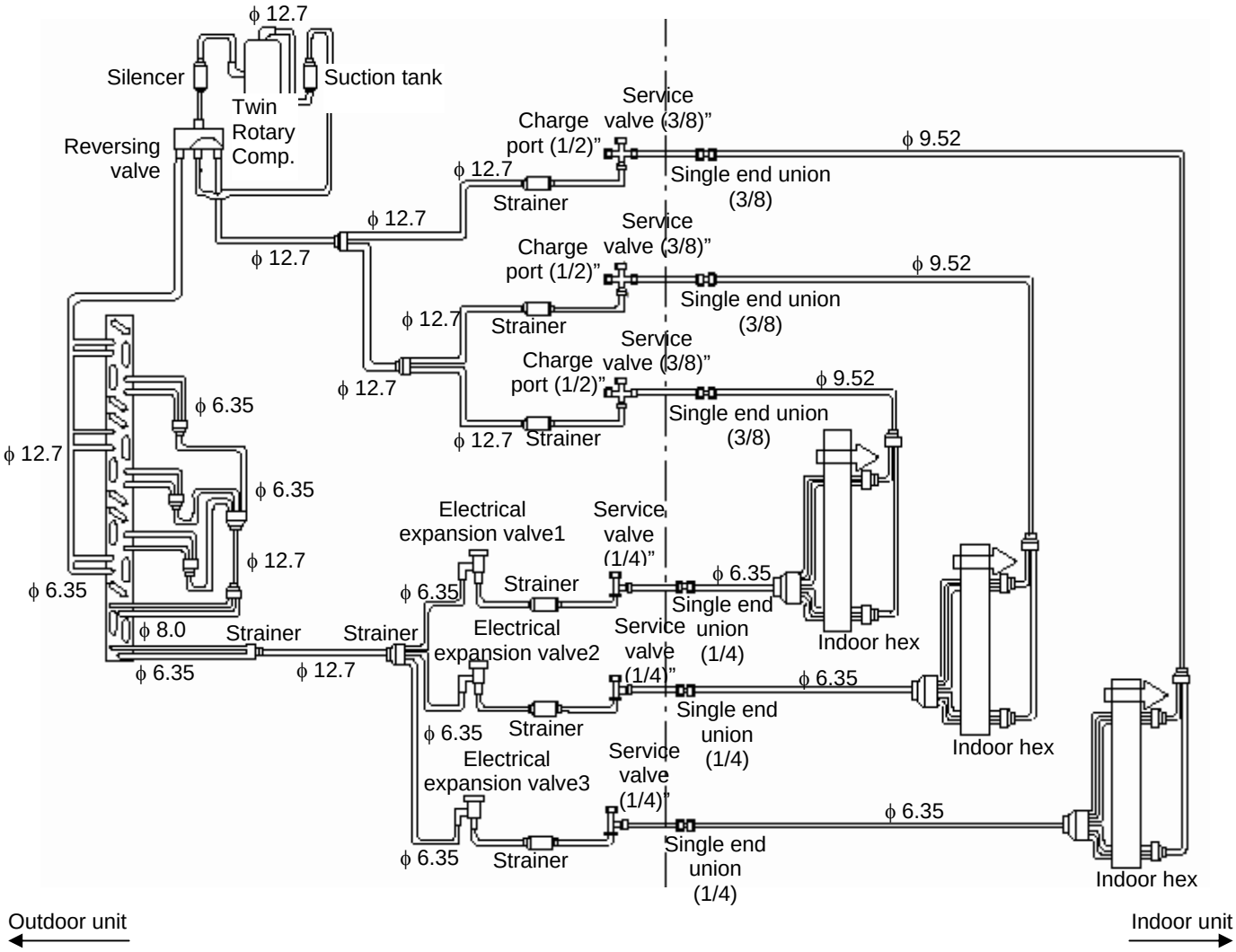

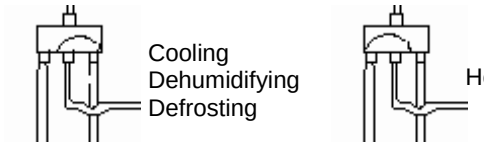

RAM-65QH5 reversing valve position

8.2.7. RAM-72QH5

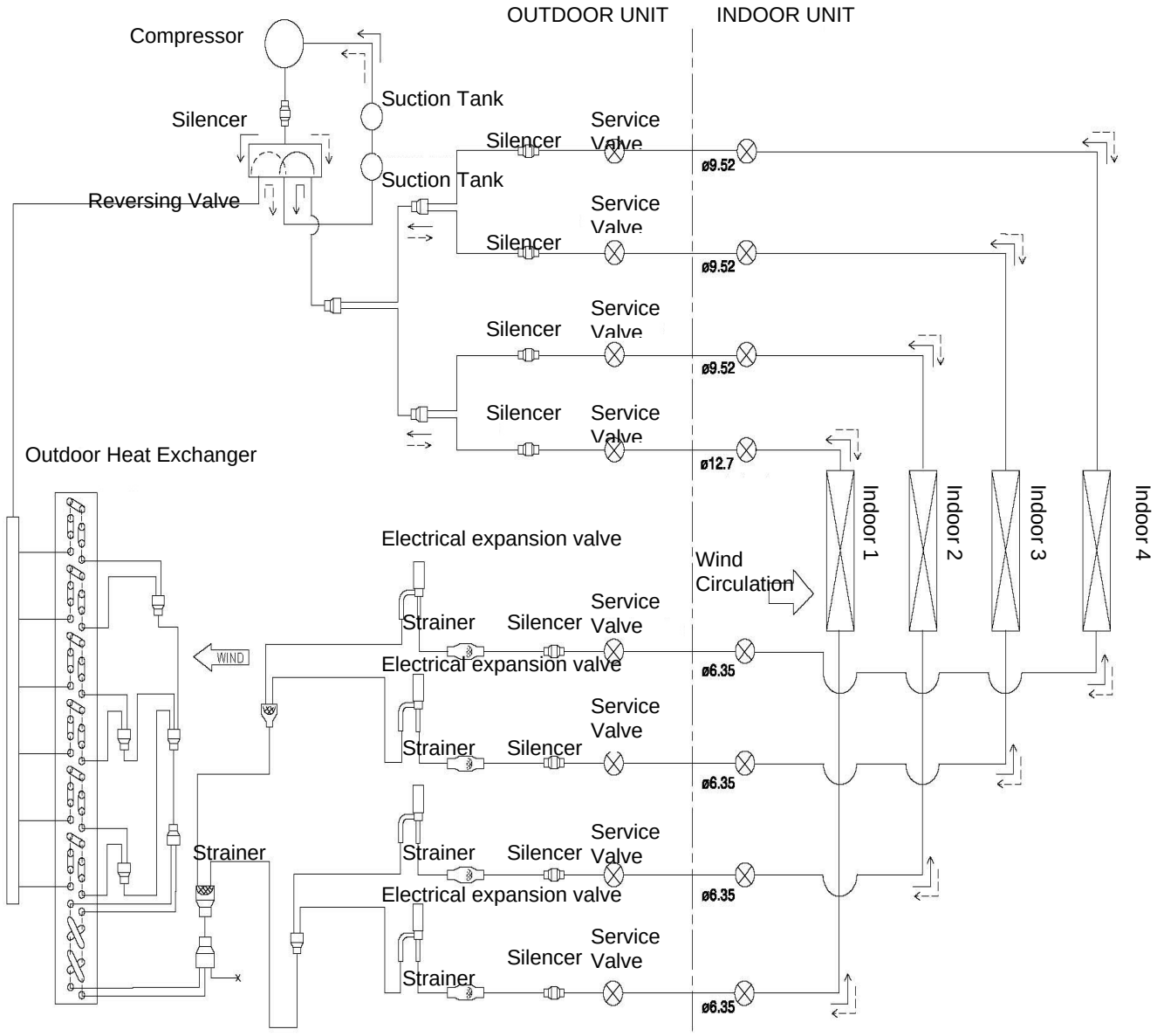

RAM-80QH5

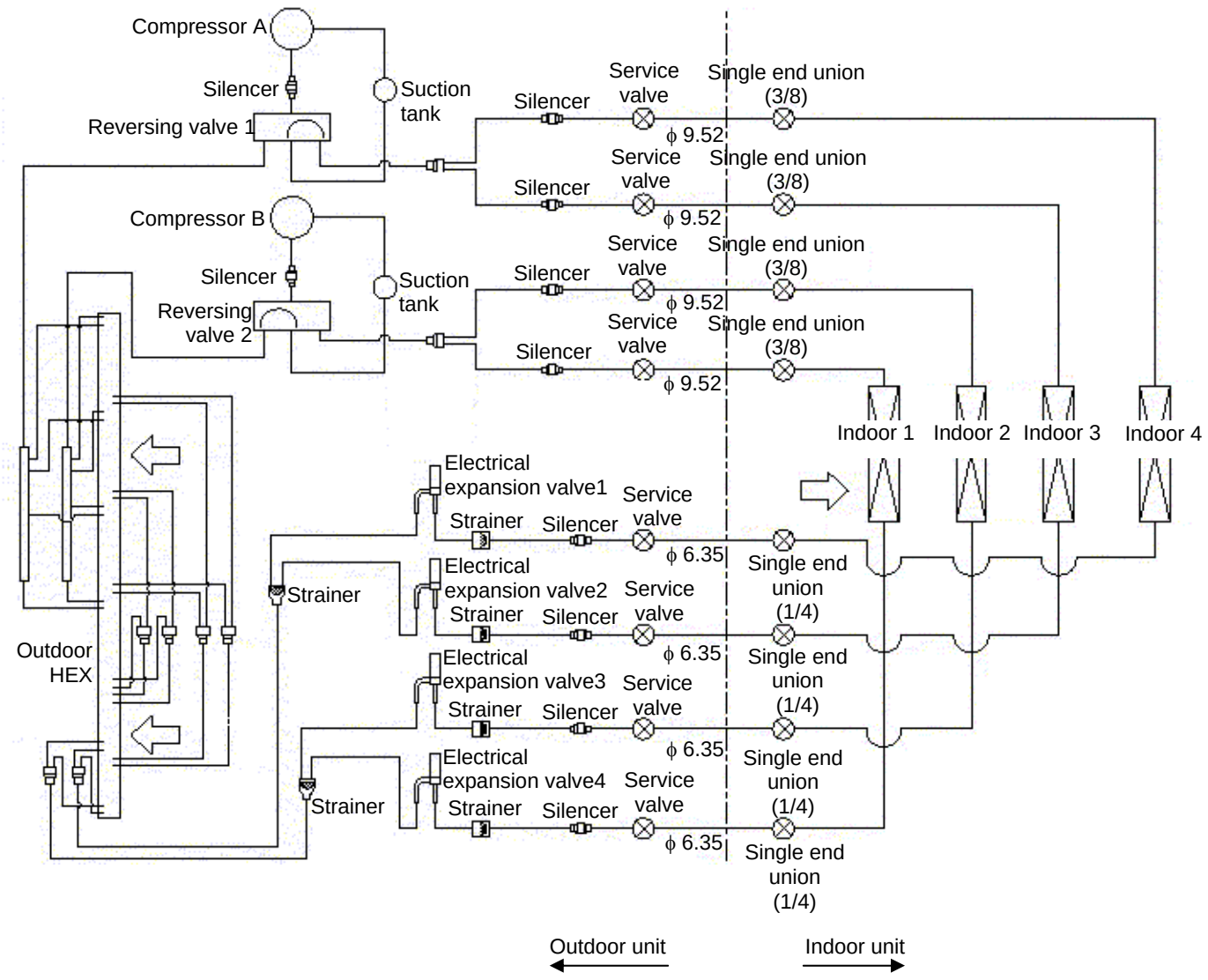

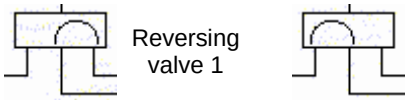	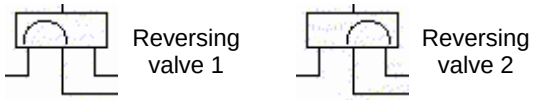
Cooling, Dehumidifying, Defrosting RAM-80QH5 reversing valve position	Heating RAM-80QH5 reversing valve position

8.3. INVERTER SPLIT UNITS

8.3.1. RAS/RAC-18YH5

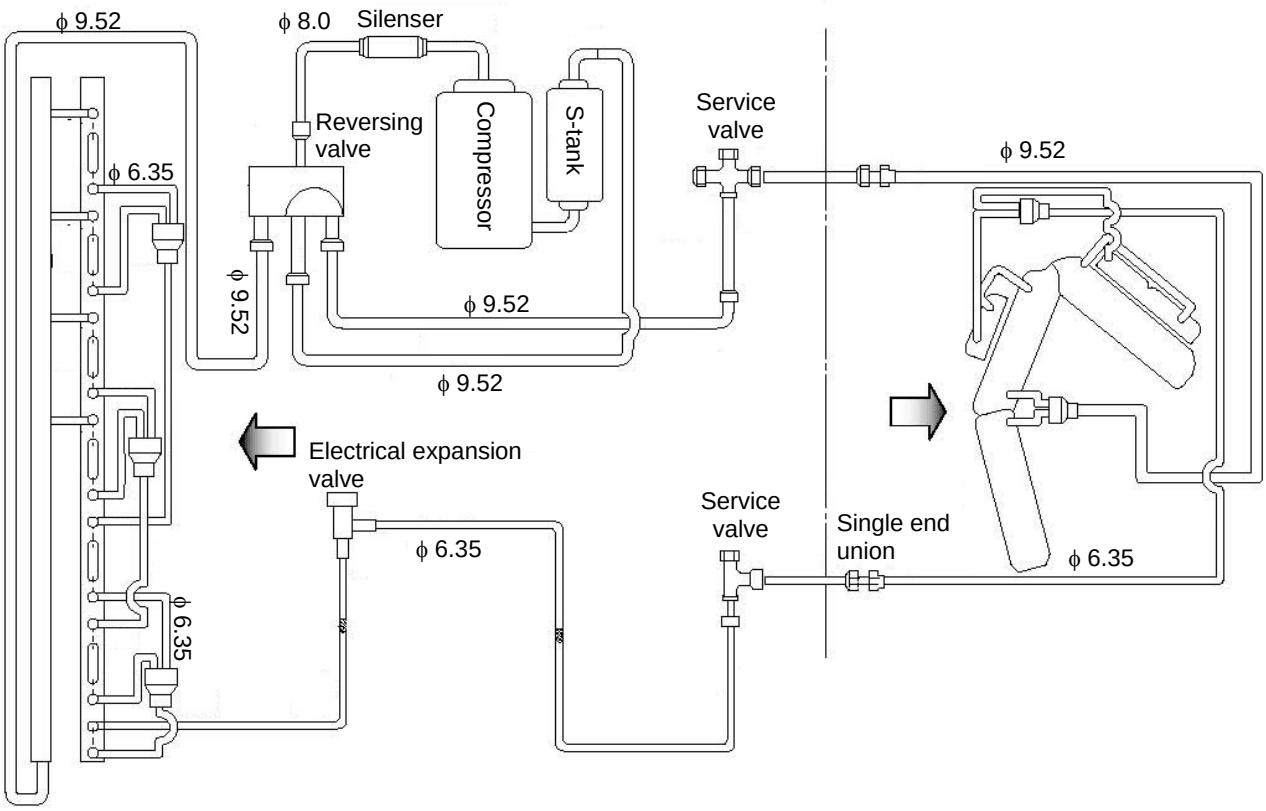

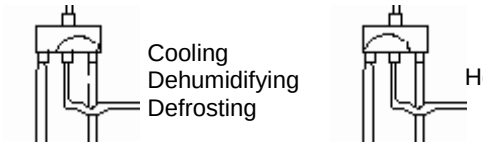

RAC-18YH5 reversing valve position

8.3.2. RAS/RAC-25YH5

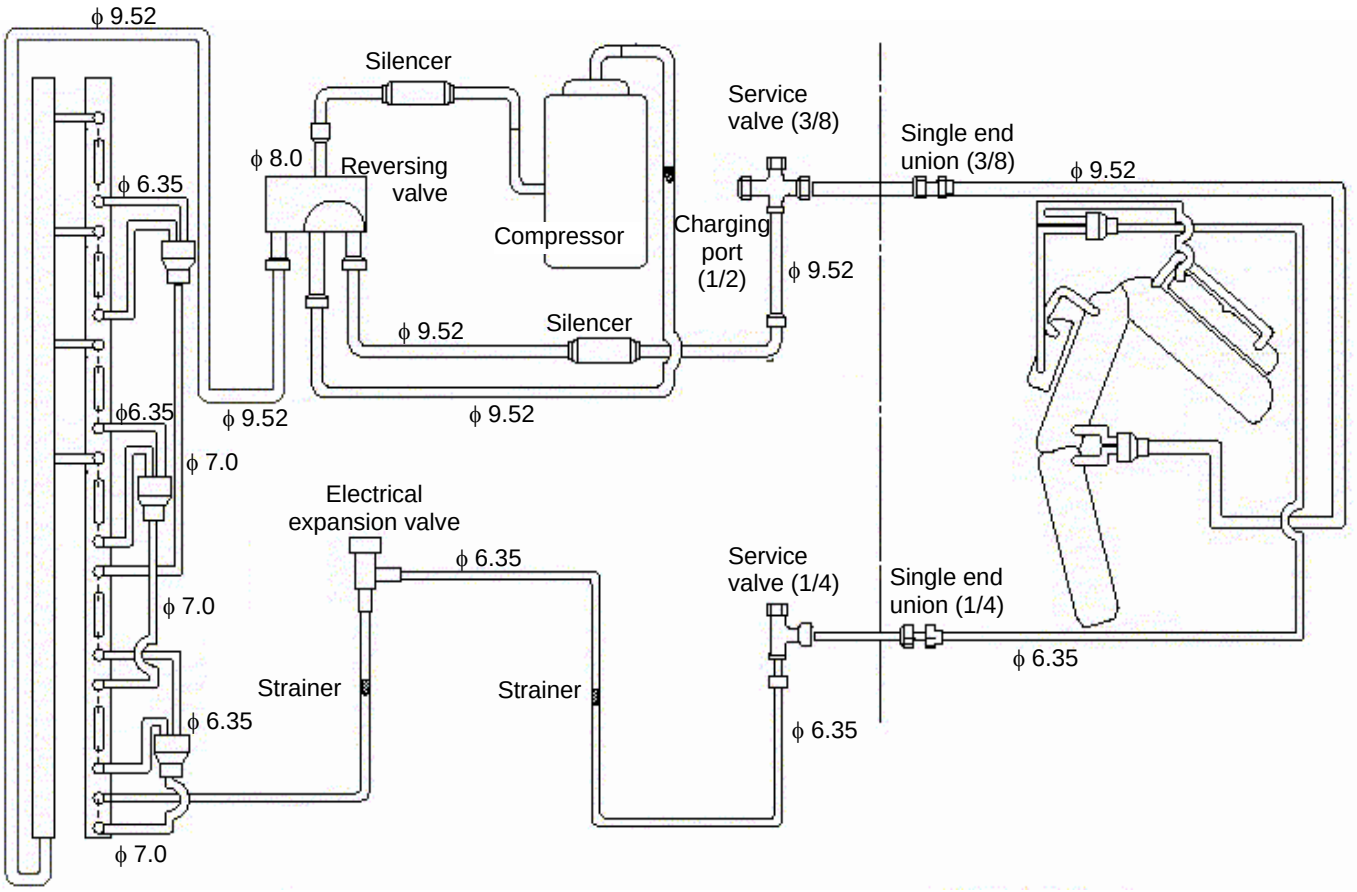

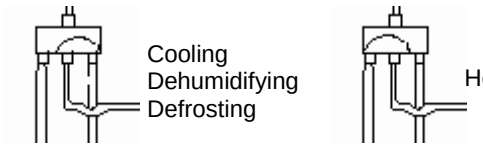

RAC-25YH5 reversing valve position

8.3.3. RAS/RAC-35YH5

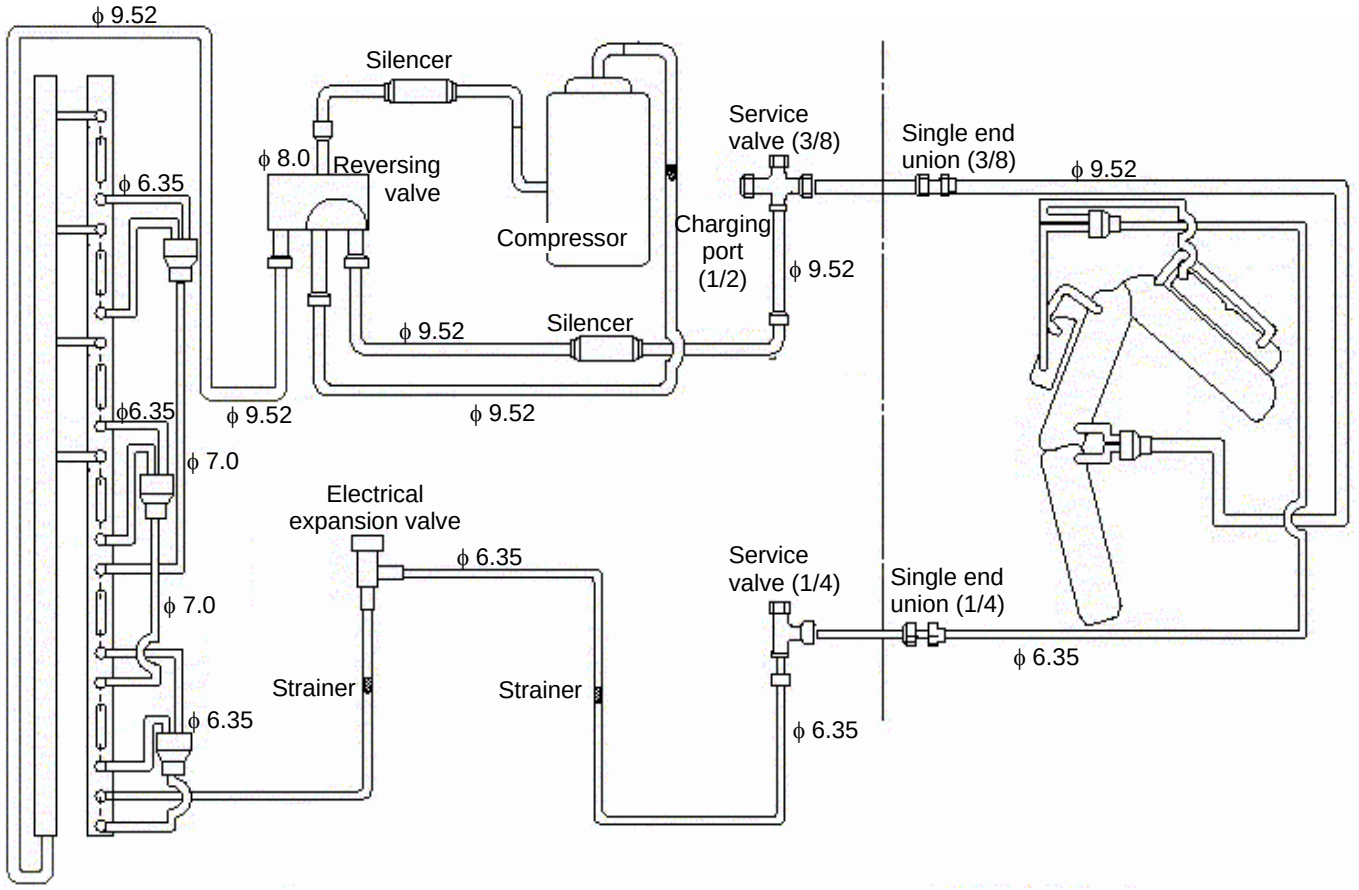

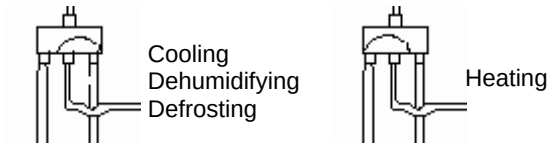

RAC-35YH5 reversing valve position

8.3.4. RAS/RAC-50YH5

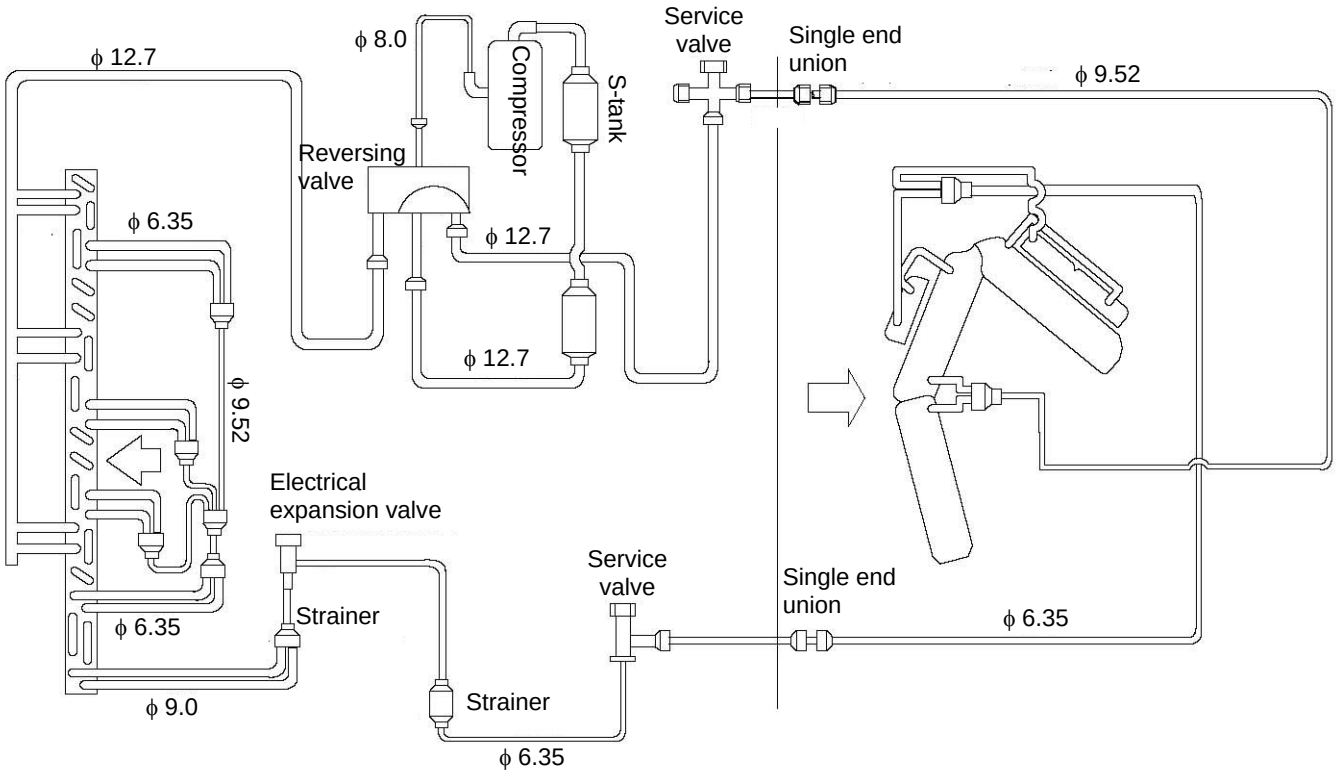

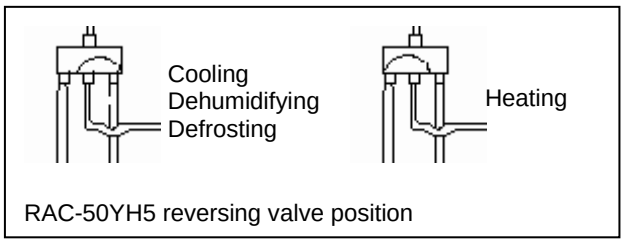

RAC-50YH5 reversing valve position

8.3.5. RAS/RAC-60YH5

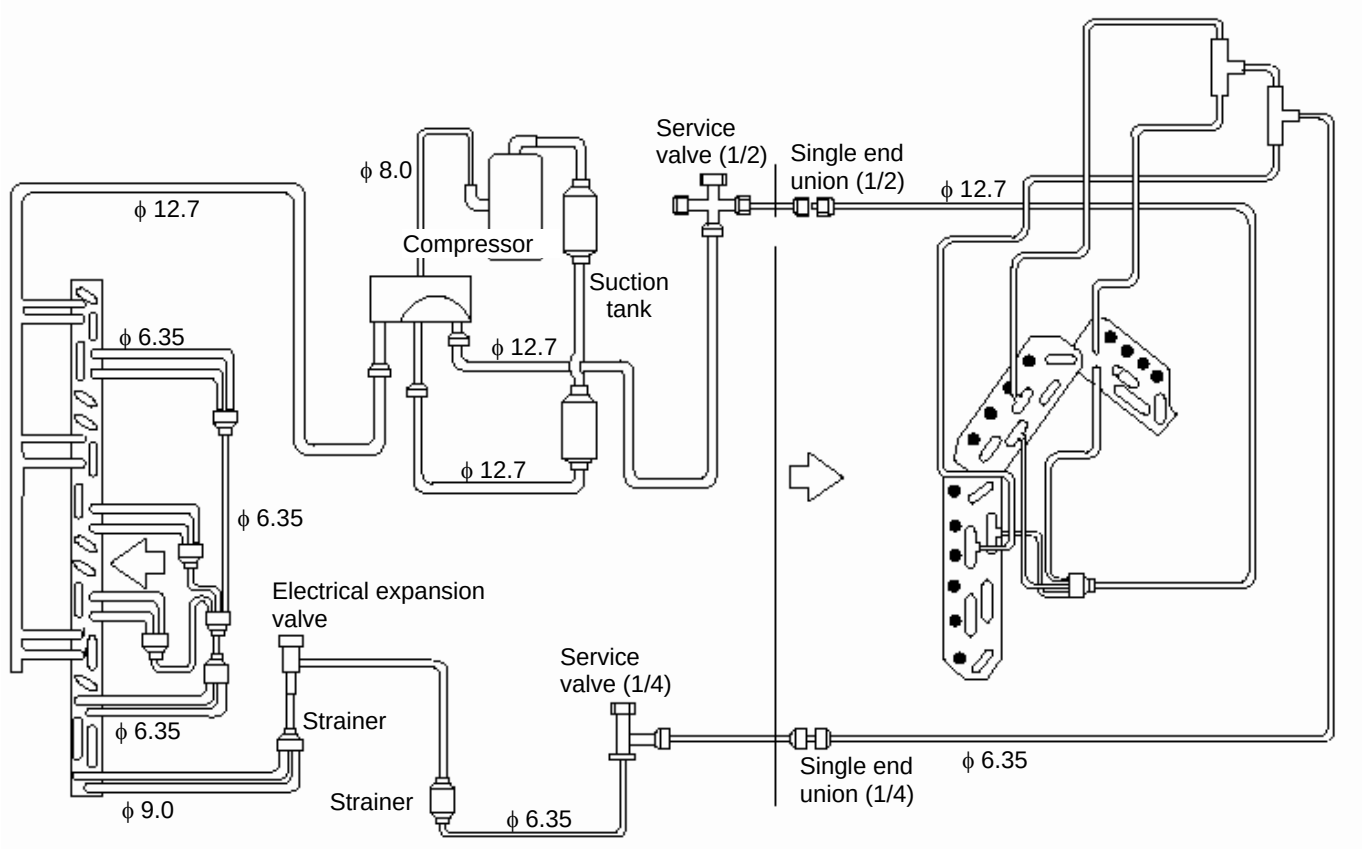

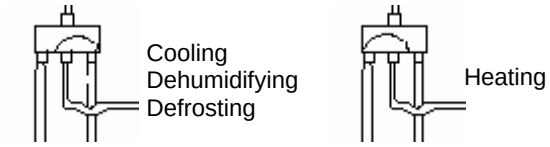

RAC-60YH5 reversing valve position

8.3.6. RAS/RAC-70YH5

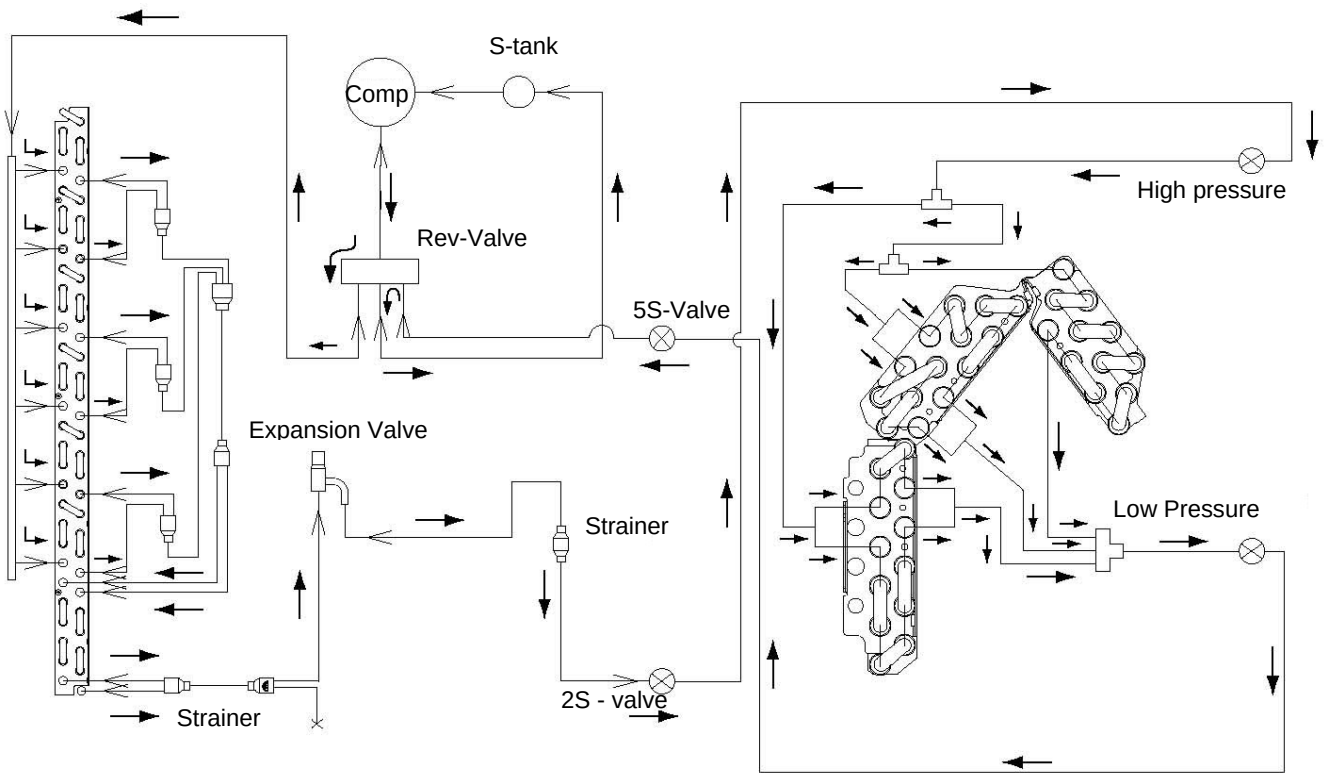

8.3.7. RAS/RAC-80YH5

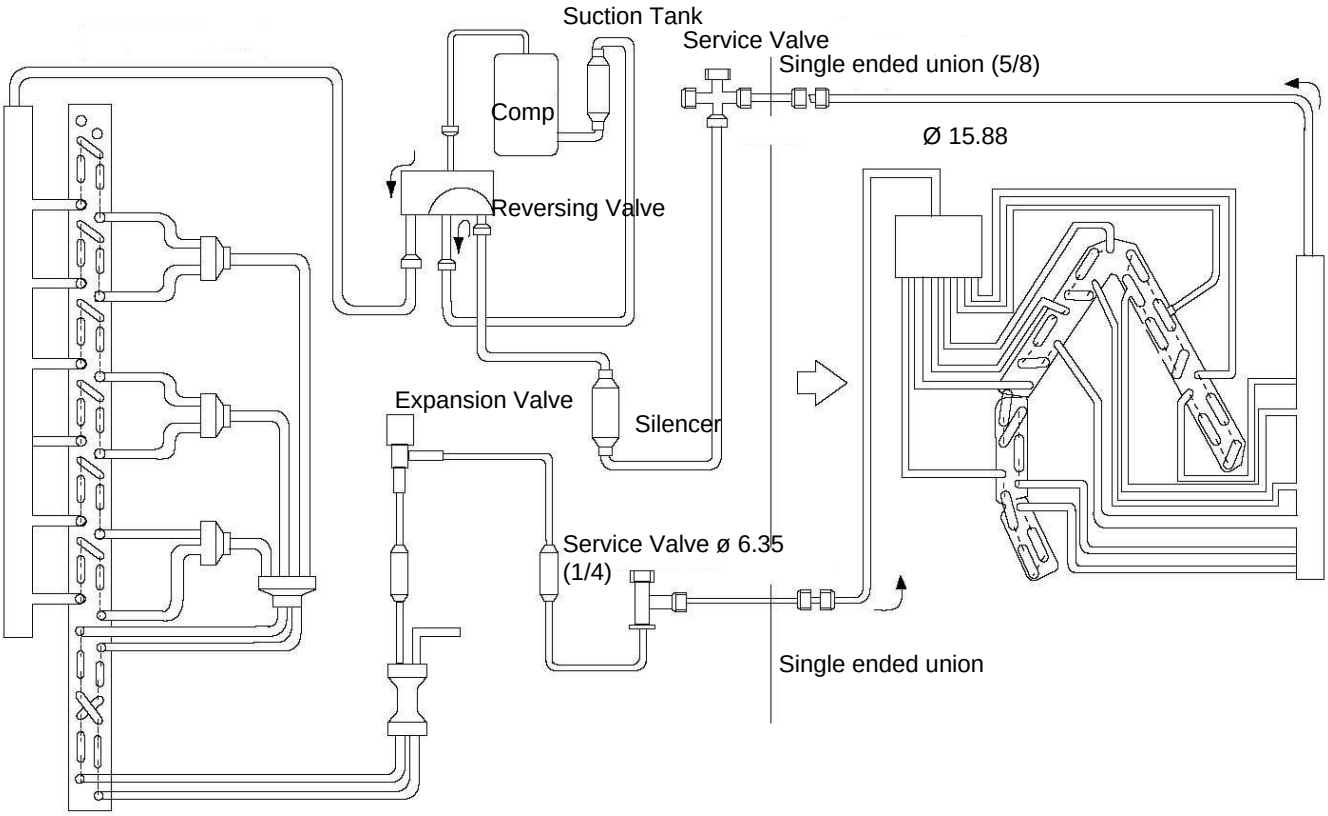

8.4. CONSTANT SPEED SPLIT UNITS

8.4.1. RAS/RAC-07G4

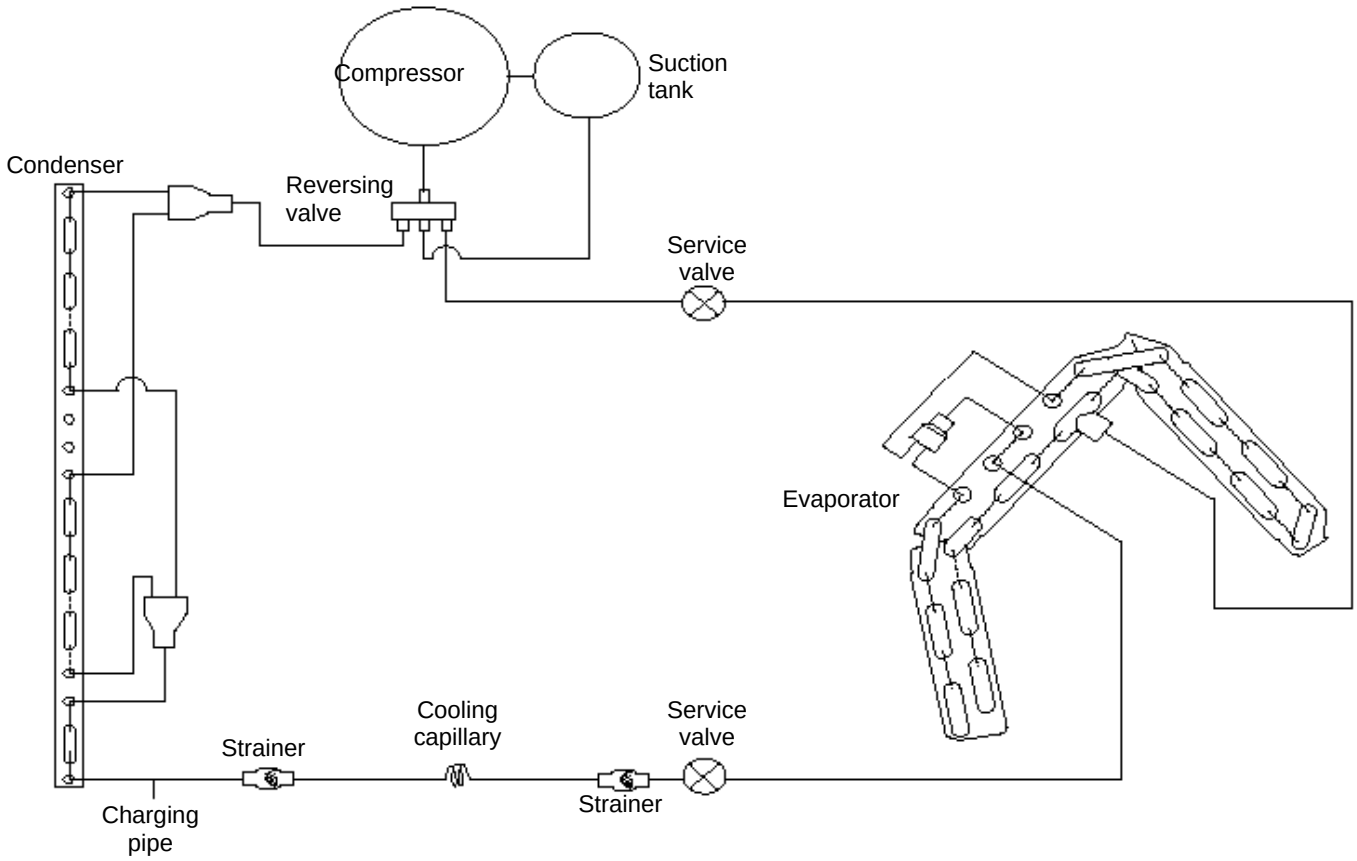

8.4.2. RAS/RAC-09G4

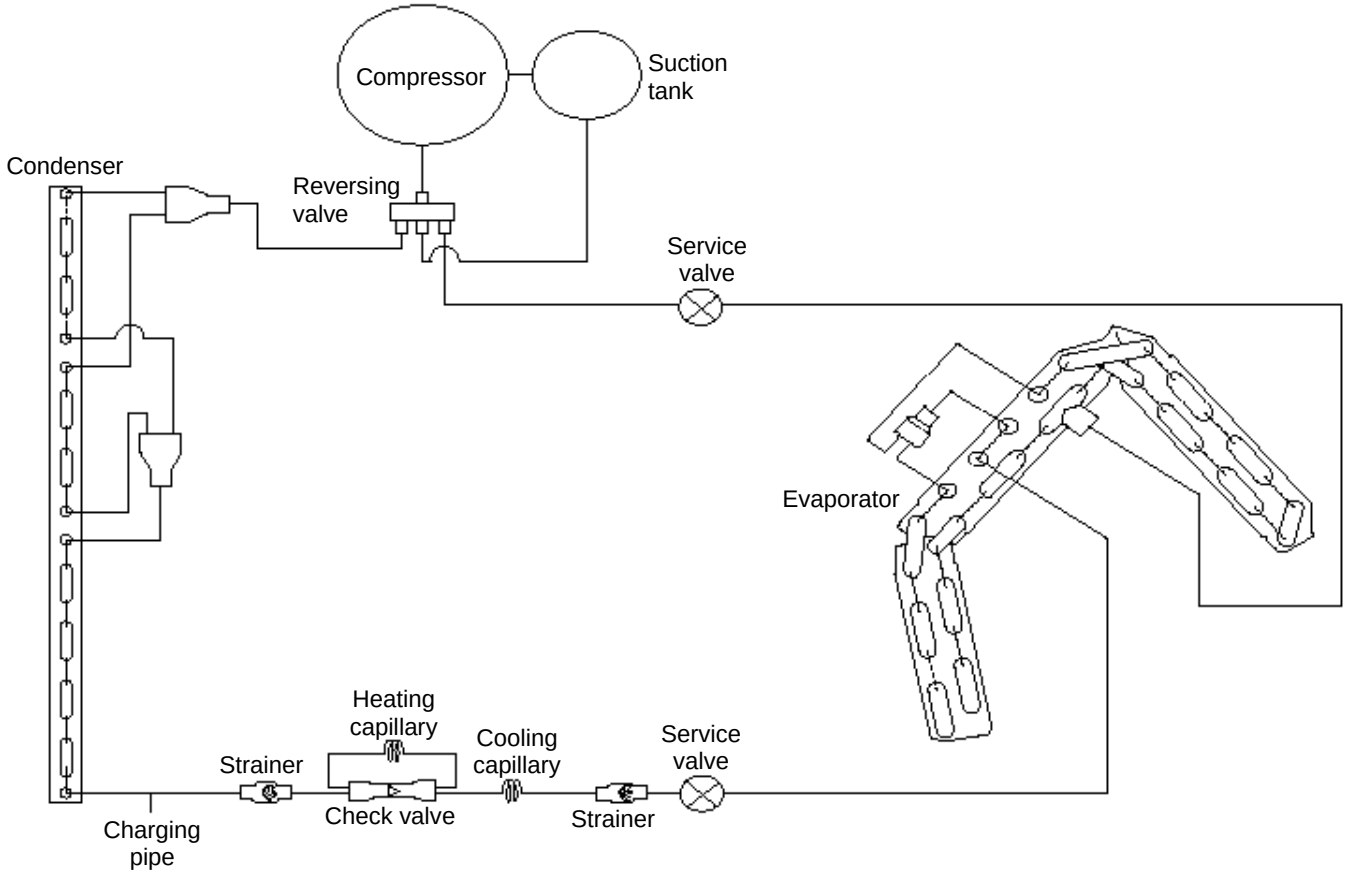

8.4.3. RAS/RAC-14G4

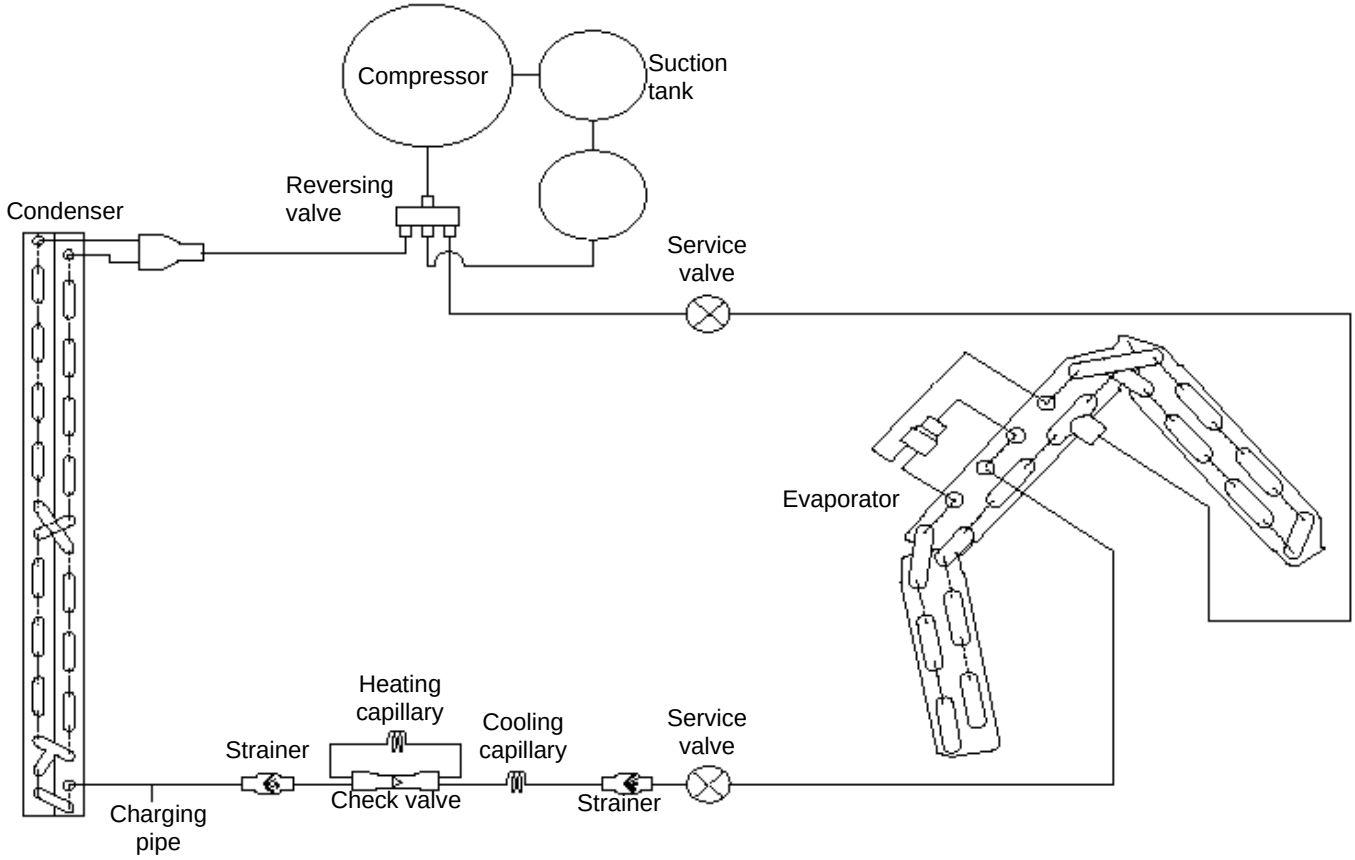

8.4.4. RAS/RAC-18G4

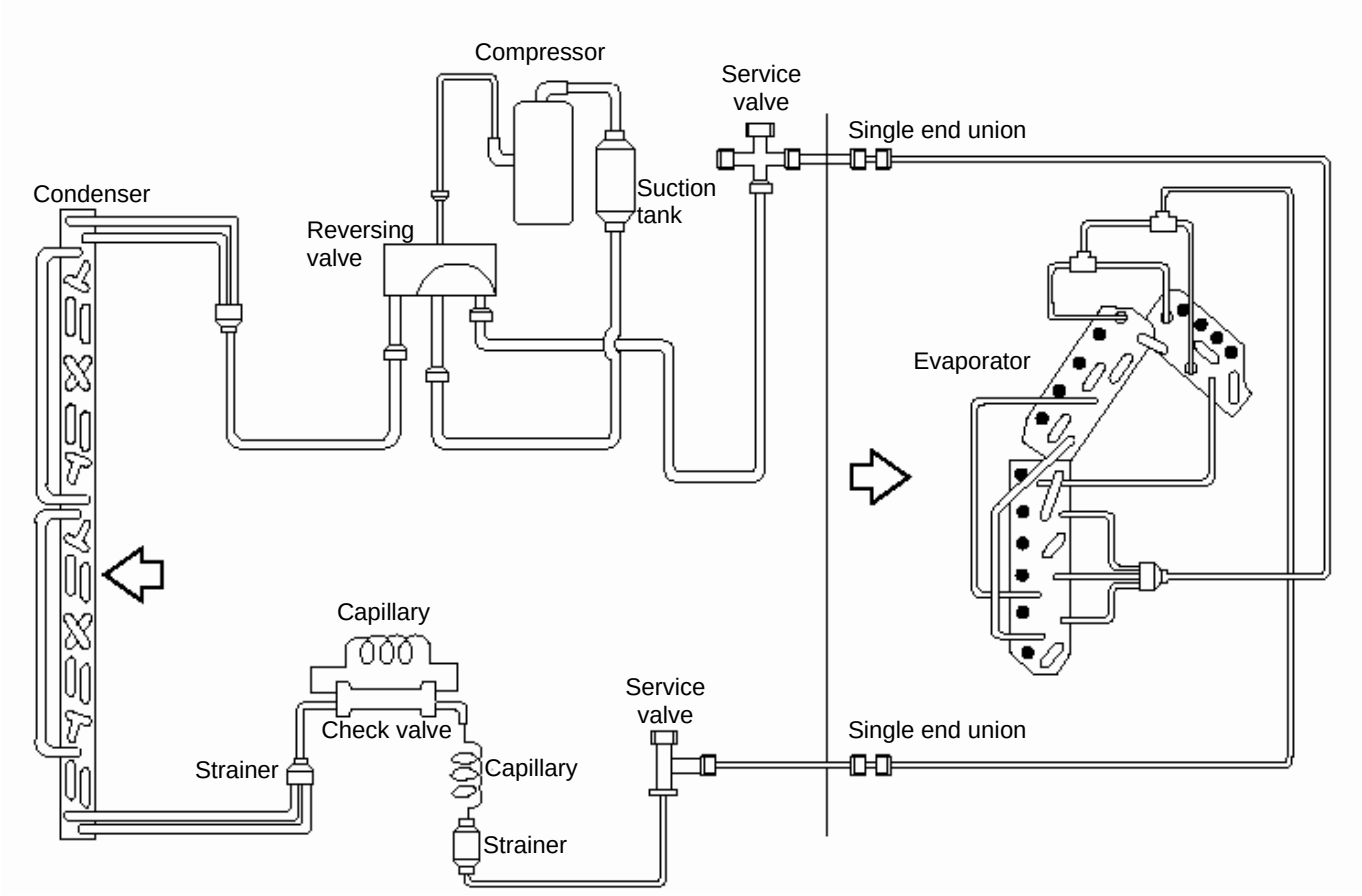

8.4.5. RAS/RAC-24G4

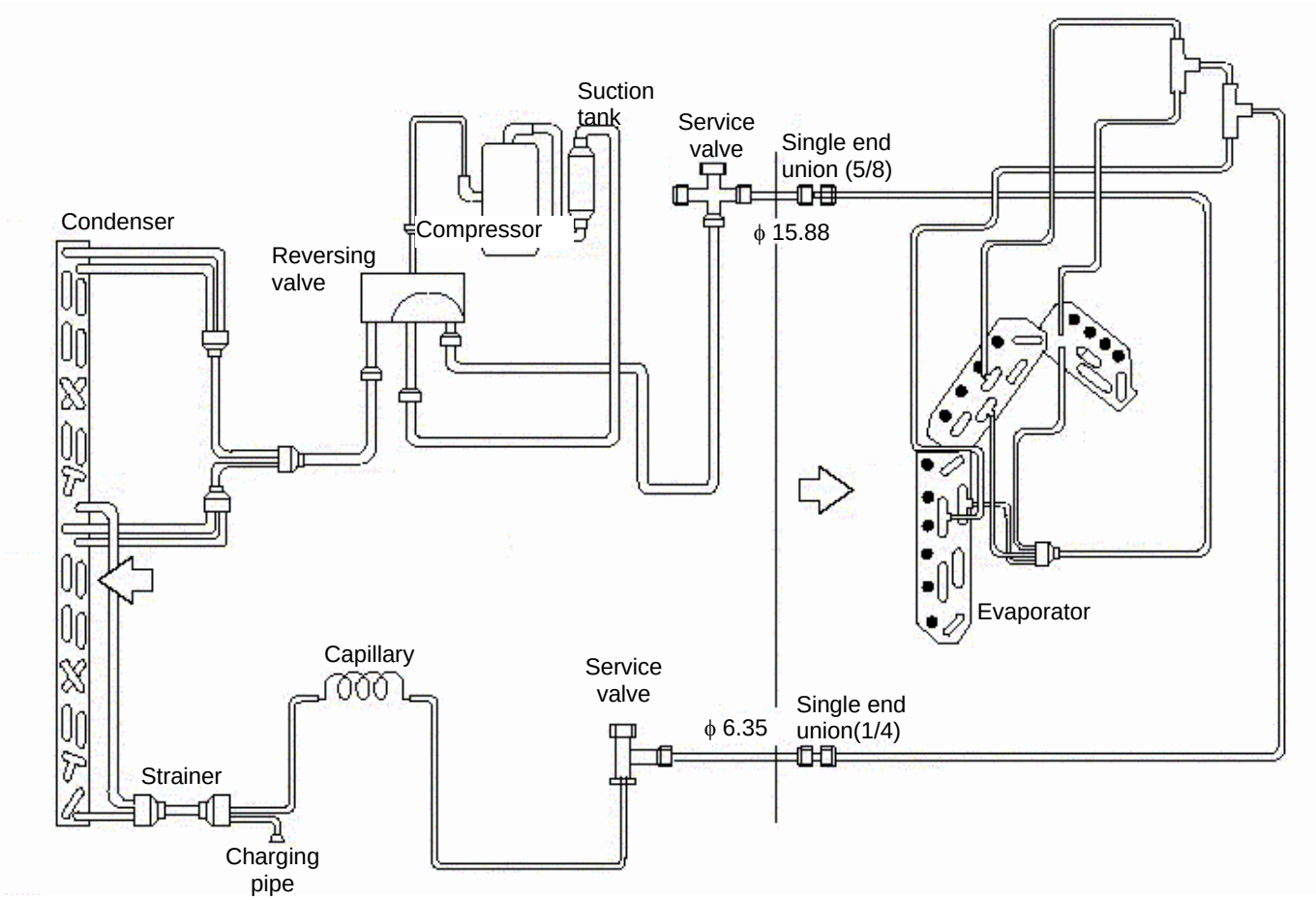

8.4.6. RAS/RAC-07GH4

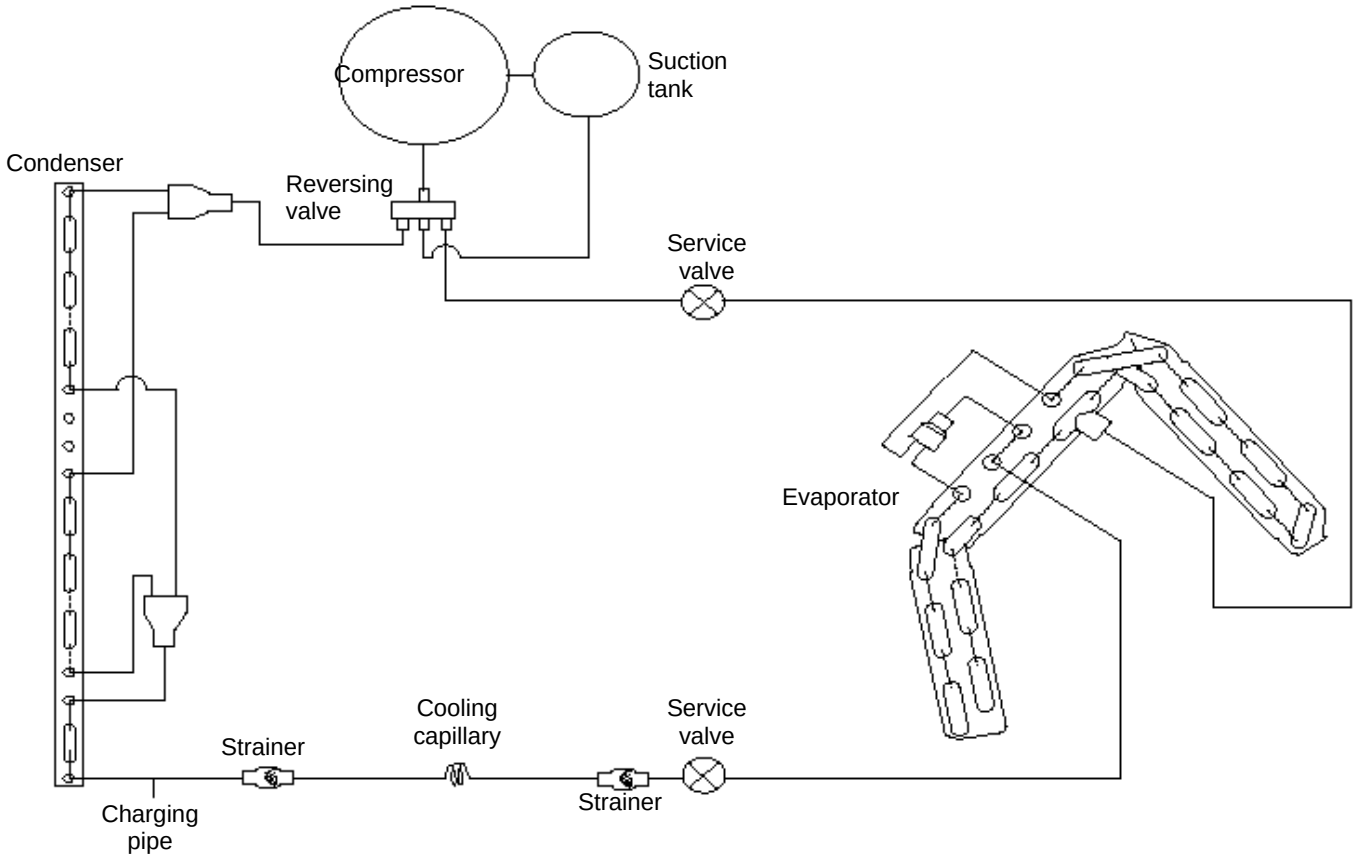

8.4.7. RAS/RAC-09GH4

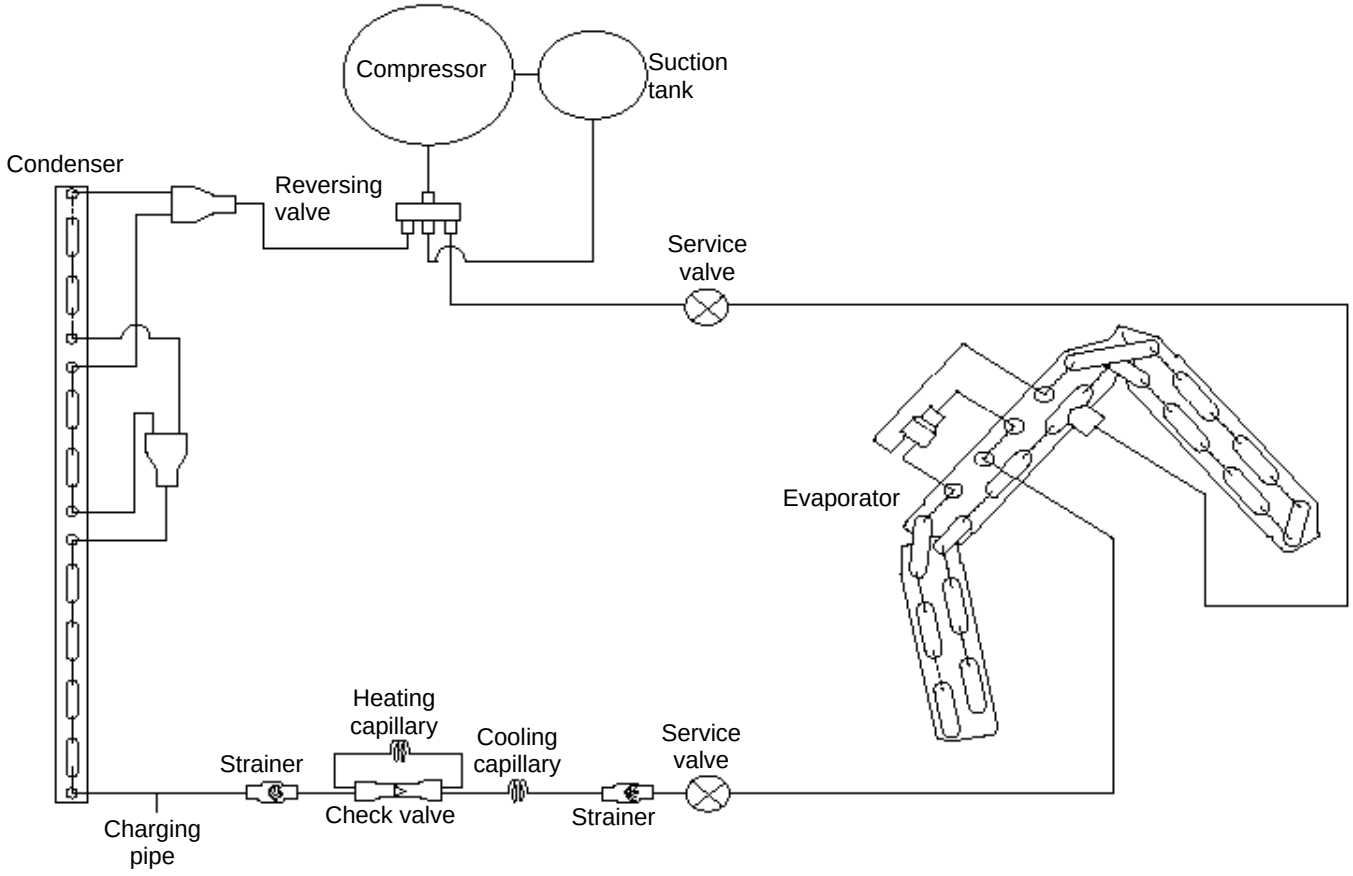

8.4.8. RAS/RAC-14GH4

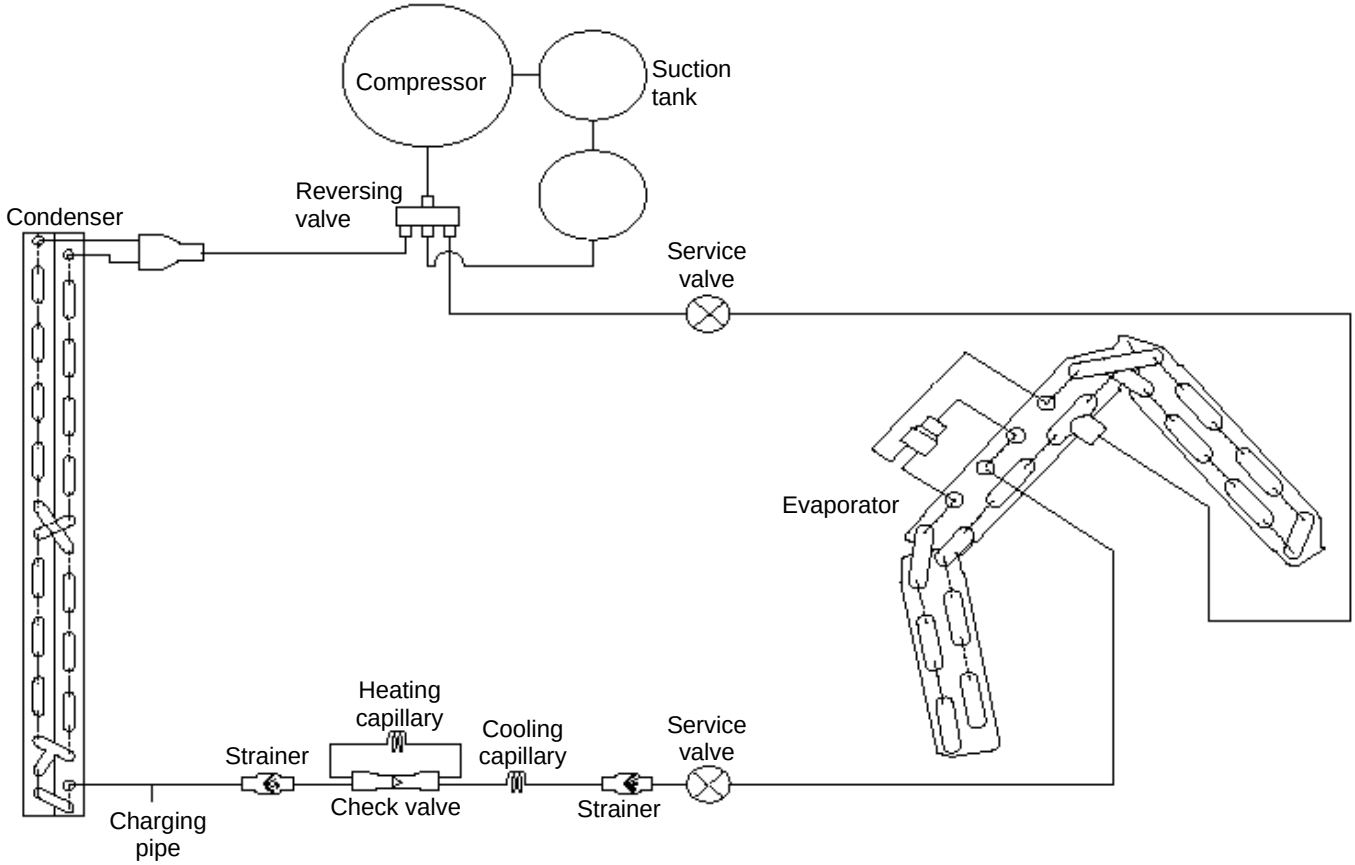

8.4.9. RAS/RAC-18GH4

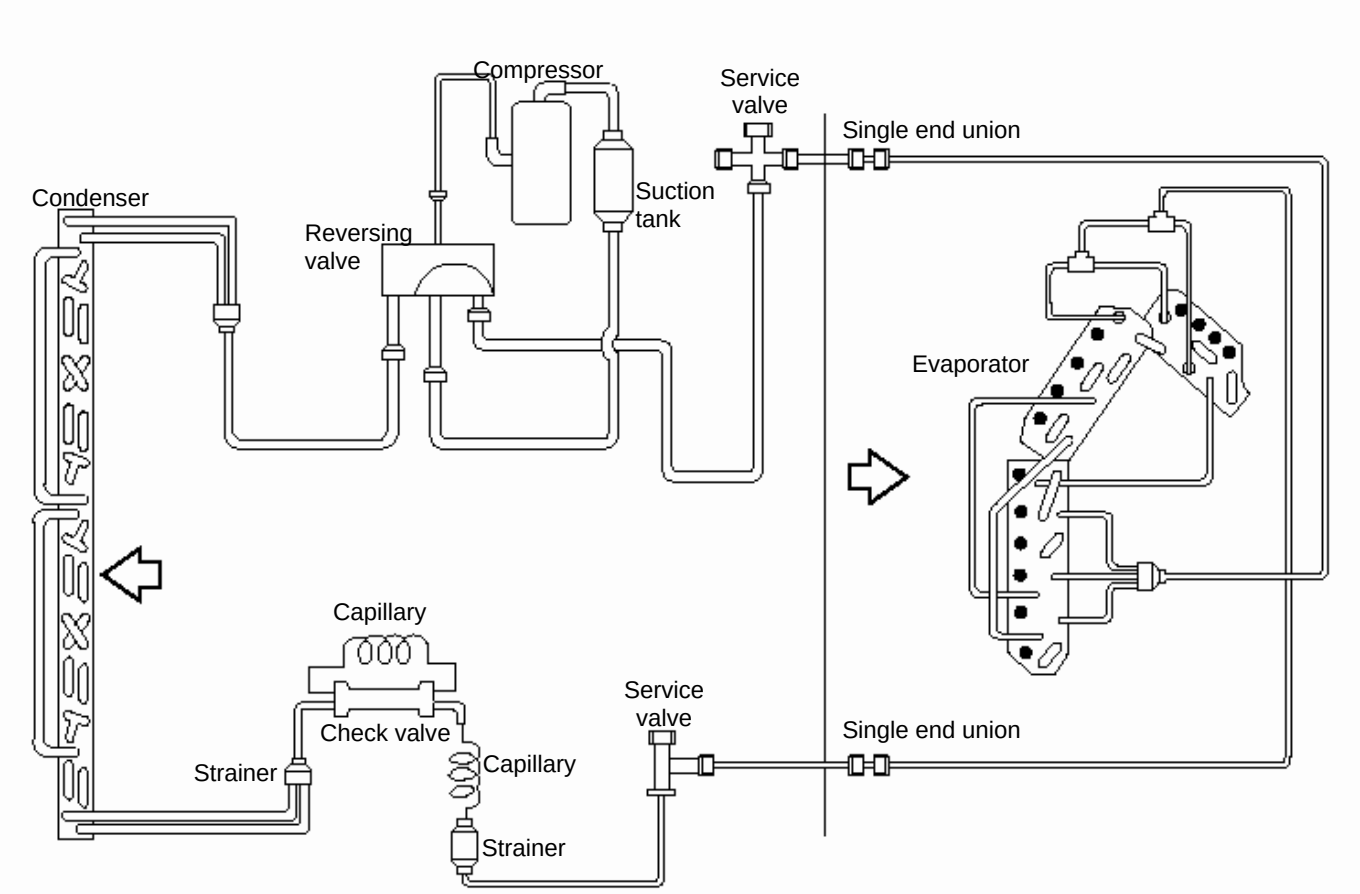

8.4.10. RAS/RAC-24GH4

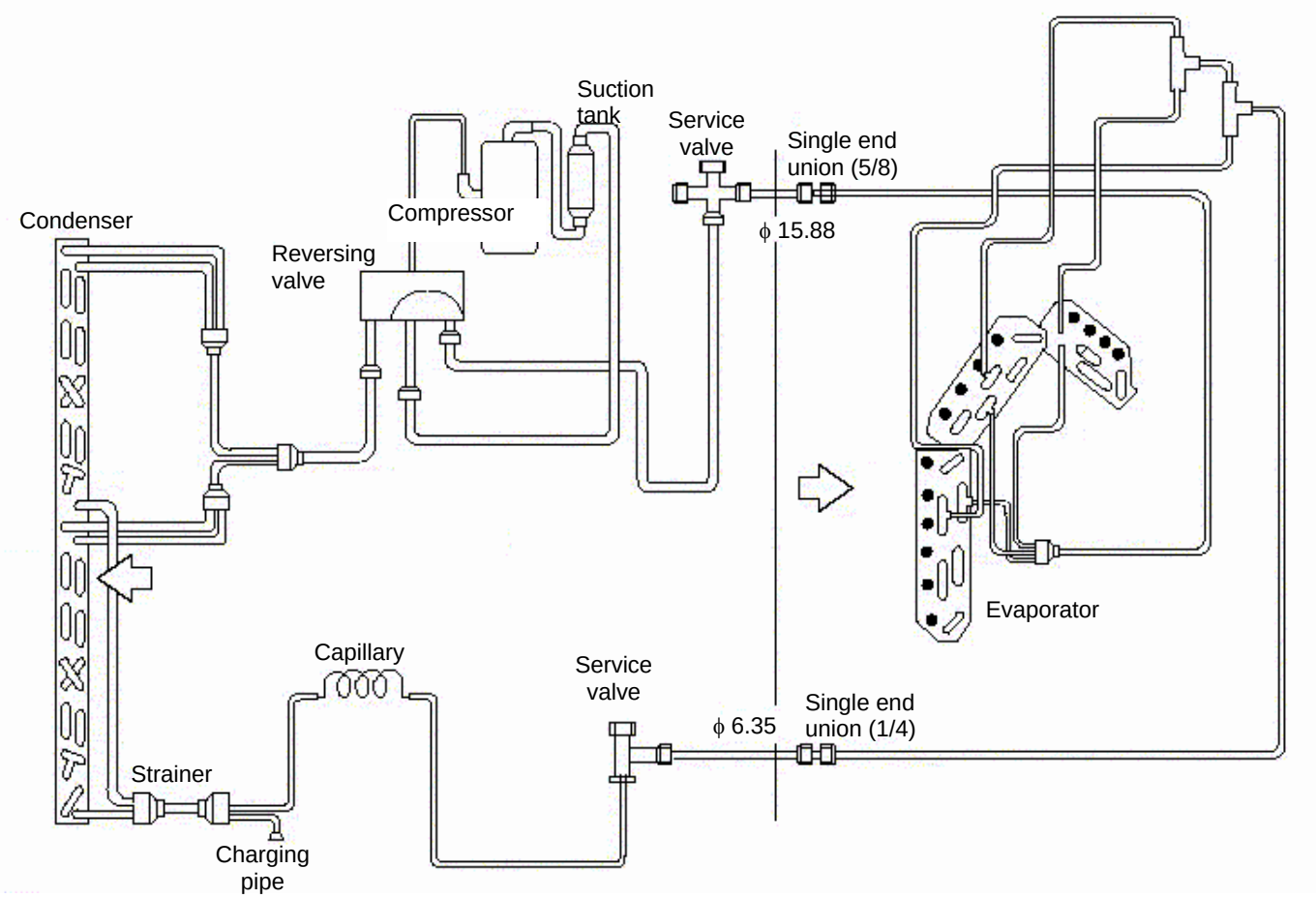

9 REMOTE CONTROLLERS OPERATION

CONTENTS

9 REMOTE CONTROLLERS OPERATION 9-1

9.1 Remote control function 9-2

9.1.1. Automatic operation 9-3
9.1.2. Auto restart control 9-3
9.1.3. Heating operation 9-3
9.1.4. Cooling operation 9-3
9.1.5. Dehumidifying operation 9-3
9.1.6. Auto Changeover* 9-3
9.1.7. How to set sleep timer 9-4
9.1.8. How to adjust the air deflector 9-4
9.1.9. How to set time 9-4
9.1.10. How to set off timer 9-4
9.1.11. How to set on timer 9-5
9.1.12. How to set on/off timer 9-5

9.1 REMOTE CONTROL FUNCTION

CAUTION:

Press switches only with fingers. Do not press switches by any other item, as it may damage the switches.

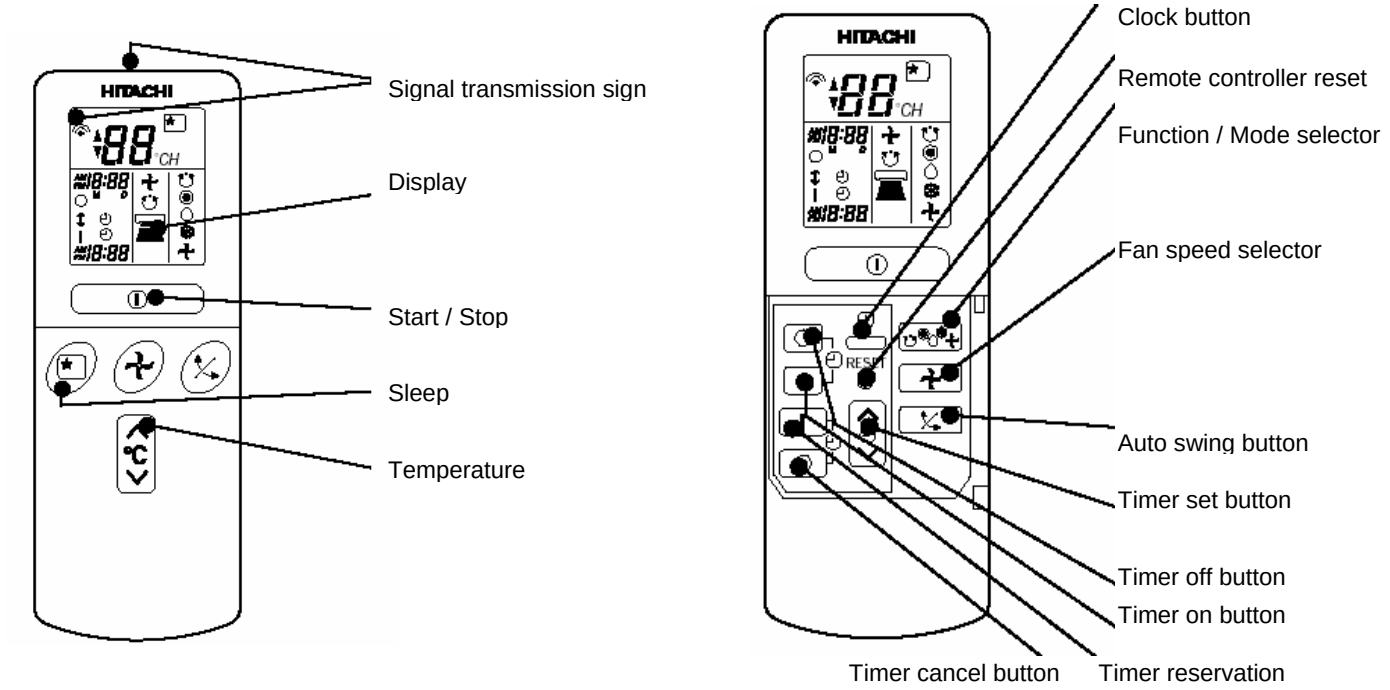

NOTE:

Handle the remote controller with care. Dropping it or getting it wet may compromise its signal transmission capability. After new batteries are inserted into the remote controller, the unit will initially require approximately 10 seconds to respond to commands and operate.

9.1.1. AUTOMATIC OPERATION

The device will automatic determines the mode of operation, HEAT, COOL, or DEHUMIDIFY depending on the current room temperature. The selected mode of operation will change when the room temperature varies.

1. Press the function selector so that the display indicates AUTO mode of operation.
2. Press the START / STOP button, operation will starts with a beep. Press again to stop the operation.
3. Press the temperature button and the temperature setting will change by 1°C each time.

NOTE:

1. *The preset temperature and actual room temperature may vary somewhat depending on the conditions.*
2. *The display does not indicate the preset temperature in the AUTO mode. If you change the setting, the indoor unit will produce a beep.*

9.1.2. AUTO RESTART CONTROL

If there is a power failure, operation will be automatically restarted when the power is resumed with previous operation mode and airflow direction. (As the operation is not stopped by the remote controller)

When the circuit breaker is resumed, the operation will be automatically restarted with previous operation mode and airflow direction. If you do not intend to continue the operation when the power is resumed, switch of the power supply.

9.1.3. HEATING OPERATION

1. Press the function selector so that the display indicates HEAT mode of operation.
2. Set the desired room temperature with the TEMP button.
3. Press the START / STOP button, operation will starts with a beep. Press again to stop the operation.

NOTE:

1. *The preset temperature and actual room temperature may vary somewhat depending on the conditions.*

9.1.4. COOLING OPERATION

1. Press the function selector so that the display indicates COOL mode of operation.
2. Set the desired FAN SPEED with the FAN SPEED button.
3. Set the desired room temperature with the TEMP button.
4. Press the START / STOP button, operation will starts with a beep. Press again to stop the operation.

9.1.5. DEHUMIDIFYING OPERATION

1. Press the function selector so that the display indicates DEHUMIDIFY mode of operation. The FAN SPEED is set at LOW automatically.
2. The FAN SPEED button does not work.
3. Set the desired room temperature with the TEMP button.
5. Press the START / STOP button, operation will starts with a beep. Press again to stop the operation.

NOTE:

1. *When the room temperature is higher that the temperature setting, the device will dehumidify the room, reducing the room temperature to the preset level.*
2. *When the room temperature is lower than the temperature setting, dehumidifying will be performed at the temperature setting slightly lower than the current room temperature, regardless of the temperature setting. The function will stop as soon as the room temperature becomes lower than the setting temperature.*

9.1.6. AUTO CHANGEOVER*

Auto changeover function only applicable during auto mode is on. During the auto mode, the changeover function is triggered by determine the outdoor temperature and the indoor temperature.
The auto-changeover mode operation will be restricted or automatically changeover when the temperature of the outdoor and indoor matches the criteria as below,

During cooling	
Outdoor temperature >27°C	Restricted to cooling
Room temperature < 2°C below preset temperature	Change to heating
During heating	
Outdoor temperature<16°C	Restricted to heating
Room temperature > 3°C above preset temperature	Change to cooling

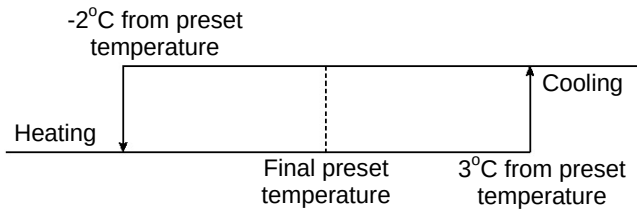

The auto changeover mode is only applicable to

Applicable models
RAK / RAC-25 / 35 / 50 / 65NH5
RAI / RAC-25NH5,RAI-35NH5 / RAC-50NH5
RAF / RAC-25 / 35 / 50NH5
RAD / RAC-25NH5, RAD-35NH5
RAS-18YH5 / RAC-18YH5
RAS-25YH5 / RAC-25YH5
RAS-35YH5 / RAC-35YH5
RAS-50YH5 / RAC-50YH5
RAS-60YH5 / RAC-60YH5
RAS-70YH5 / RAC-70YH5
RAS-80YH5 / RAC-80YH5

**Auto changeover function not applicable when connected to Multizone outdoor unit.*

9.1.7. HOW TO SET SLEEP TIMER

The device will continue working for the designated number of hours and then turn off.

The timer information will be displayed on the remote controller. The timer lamp lights with a beep from the indoor unit. When the sleep timer has been set, the display indicates the turn off time.

The device can be turn off by the SLEEP timer and turn on by the ON timer.

NOTE:

1. *If date or current time is not set, the SLEEP timer cannot be set.*
2. *If the SLEEP timer is set after the ON timer, OFF timer or the ON/OFF timer, the SLEEP timer becomes effective instead of the ON, OFF or ON/OFF timer set earlier.*
3. *SLEEP timer effective once only.*

9.1.8. HOW TO ADJUST THE AIR DEFLECTOR

The horizontal air deflector is automatically set to the proper angle suitable for each operation.
The deflector can be swung up and down continuously and also set to the desired angle using the AUTO SWING button.

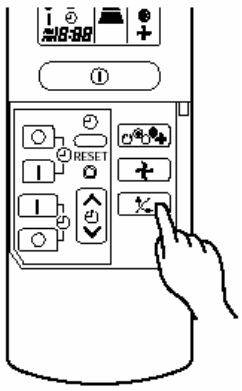

NOTE:

1. *If the AUTO SWING button is pressed once, the horizontal air deflector swings up and down. If the button is pressed again, the deflector stops in it current position.*
2. *When the operation stop, the horizontal air deflector moves and stops at the position where the air outlet closes.*

CAUTION:

– *In cooling operation, do not keep the horizontal air deflectors swinging for a long time. Some dew may form on the horizontal air deflector and dew may drop.*

9.1.9. HOW TO SET TIME

Whenever or after changing the batteries, the remote control will prompt for current month and date.

1. Set the current month and day with the TIMER control button.

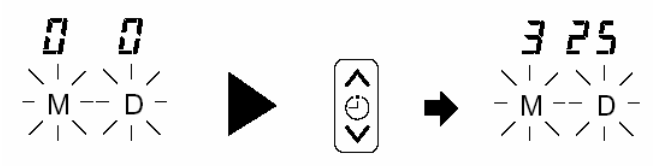

2. Press the TIME button.

3. Set the current time with the TIME control button.

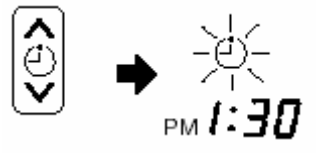

4. Press the TIME button again, the time indication starts lighting instead of flashing.

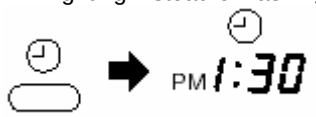

9.1.10. HOW TO SET OFF TIMER

1. Press the OFF TIMER button. Then set the turn-off time with the timer control button

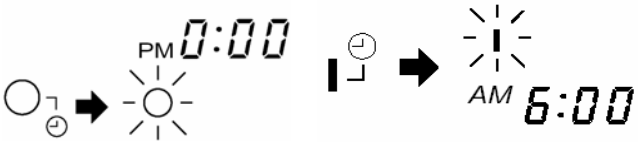

2. Press the RESERVE button so that the OFF indication lights and the RESERVE indication blinks.

3. Press the CANCEL button to cancel the timer reservation mode, the RESERVE sign goes out with a beep and the timer lamp turns off on the indoor unit.

9.1.11. HOW TO SET ON TIMER

1. Press the ON TIMER button. Then set the turn-off time with the timer control button

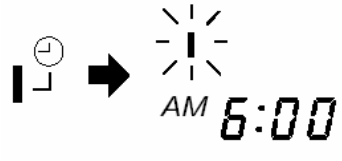

2. Set the turn on time with the TIMER control button.

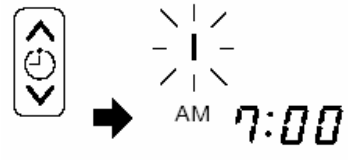

3. Press the RESERVE button, the ON indication start lighting instead of flashing and the RESERVE sign light. A beep occur and the TIMER lamps lights up on the indoor unit.

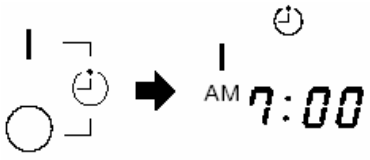

9.1.12. HOW TO SET ON/OFF TIMER

1. Press the OFF TIMER button. Then set the turn-off time with the timer control button

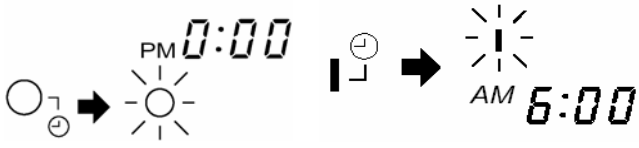

4. Press the ON TIMER button. Then set the turn-off time with the timer control button

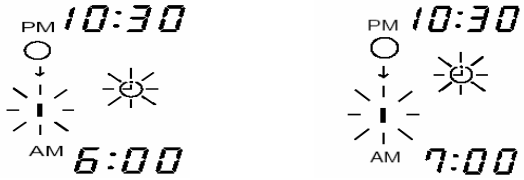

2. Press the RESERVE button so that the ON indication lights and the RESERVE sign lights. A beep occurs and the TIMER lamp lights on the indoor unit.

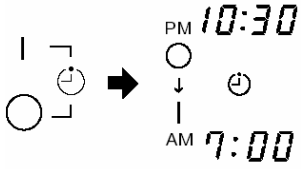

NOTE:

You can set only one of the OFF timer, ON timer and ON/OFF timer.

To cancel time reservation, press the cancel button. The reserve sign goes out with a beep and the timer lamp turn off on the indoor unit.

10 UNITS INSTALLATION

CONTENTS

10 UNITS INSTALLATION 10-1
10.1 Unit installation 10-2
10.1.1 Initial Check 10-2
10.1.2 Installation 10-2
10.2 Installation of indoor unit 10-4
10.2.1 Installation Of Wall Type Indoor 10-4
10.2.2 Installation Of 4 Way Ceiling Cassette 10-5
10.2.3 Installation of Duct Type Indoor 10-7
10.2.4 Installation of Outdoor Unit 10-8

10.1 UNIT INSTALLATION

10.1.1 INITIAL CHECK

- Install the indoor unit with a proper clearance around it for operation and maintenance working space as shown below.

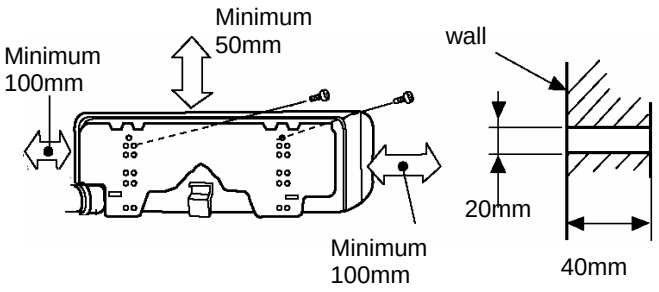

- Consider the air distribution from the indoor unit to the space of the room, and select a suitable location so that uniform air temperature in the room can be obtained.
- Avoid obstacles which may hamper the air intake or the air discharge flow.

WARNING:
Install the Unit higher than 22 mm from the floor.

10.1.2 INSTALLATION

1. Mounting Bracket onto Wall
   When the mounting bracket is directly attached to a wood wall or a concrete wall, check to ensure that the wall is strong enough to support a weight of 2000N (200kg).
2. Mounting the Unit between Pillars
   - Screws for wood market with ⊗ should be tightened utilizing the upper hole.
   - It is not recommended that the mounting bracket be installed on one pillar.
   - The location where the indoor unit is to be installed should be so selected that an unbalanced weight distribution is avoided.
   - The mounting bracket should be installed so that the side of drain piping connected is slightly (about 3mm) lower than the other side, in order to avoid the incorrect position of the drain discharge. (Drain piping connection can be performed both right side and left side of the unit.)

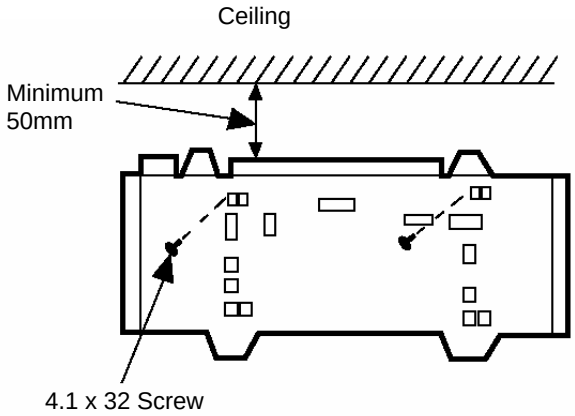

Utilize at least four Screws

3. Mounting on a Concrete Wall or a Concrete Block Wall
   Attach the mounting bracket to the wall with anchor bolts as shown below.

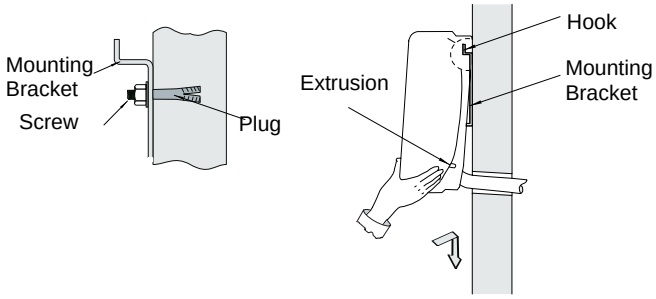

Utilize at least three anchor bolts (M8).

Hook the indoor unit to the mounting bracket, maintaining the indoor unit upright.

4. Mounting the Indoor Units
   Check to ensure that the unit is completely hooked onto the mounting bracket. If not, it may drop from the bracket, resulting in a serious accident.
5. Removing the Front Panel
   In order to connect the refrigerant piping, wiring and to

check drain water flow, removing the front panel is needed. Perform these work according to the following instructions. Pay attention to the resin components not to scratch.

Press the intake grille as shown

Slowly pull the lower side of the intake grille at your side

- Remove the two screws at the center of the intake grille, and then press the intake grille. Remove three bushings as shown and remove the screws as shown below.

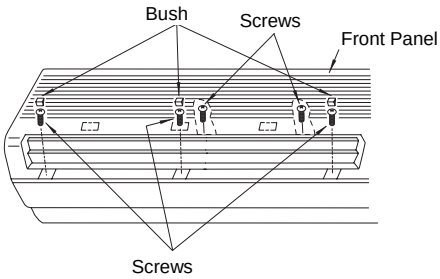

- Slowly pull the lower side of the front panel at your side by paying attention to the air outlet part without touching the outlet grille.

- Slightly lift the front panel upward in order to release the combined parts (three parts) of upper side of the front panel.

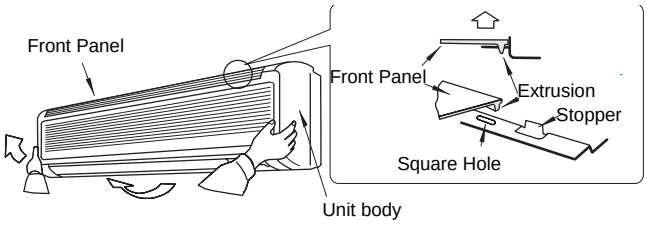

CAUTION:

When removing front panel, do not apply strong forces by hitting, etc. It may break the unit body.

6. Putting back Front Panel
   - Firstly put back the lower side of the front panel, and then combine three parts of upper side of the front panel.
   - Open the inlet grille as shown in ,and fix the screw at the center of the inlet grille.
   - There are three stoppers inside of the front panel. Check to ensure that there is no gap between front panel and unit body.

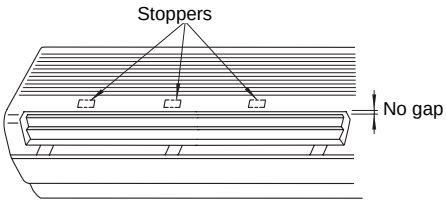

CAUTION:

Any gap may cause air leakage or dewing.

10.2 INSTALLATION OF INDOOR UNIT

10.2.1 INSTALLATION OF WALL TYPE INDOOR

WARNING:

The unit should be mounted at stable, non vibratory location which can provide full support to the unit.

CAUTION:

Do not install the unit near heat source or obstruction near the air outlet.

The installation location must be of convenience for water drainage and pipe connection with the outdoor unit.

The installation height for indoor unit must be at minimum 2.3m or more in a non-public area.

The units have 6 piping installation directions.

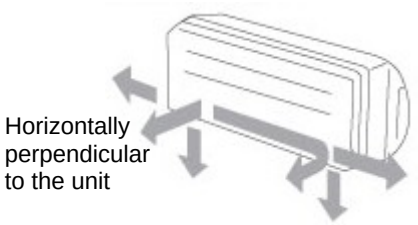

6 way direction

Models: Wall type	Piping direction
RAK-18NH5	6
RAK-25NH5	6
RAK-35NH5	6
RAK-50NH5	6
RAK-65NH5	6
RAS-07G4/GH4	6
RAS-09G4/GH4	6
RAS-14G4/GH4	6
RAS-18G4/GH4	6
RAS-24G4/GH4	6
RAS-18YH5	6
RAS-25YH5	6
RAS-35YH5	6
RAS-50YH5	6
RAS-60YH5	6
RAS-70YH5	6
RAS-80YH5	6

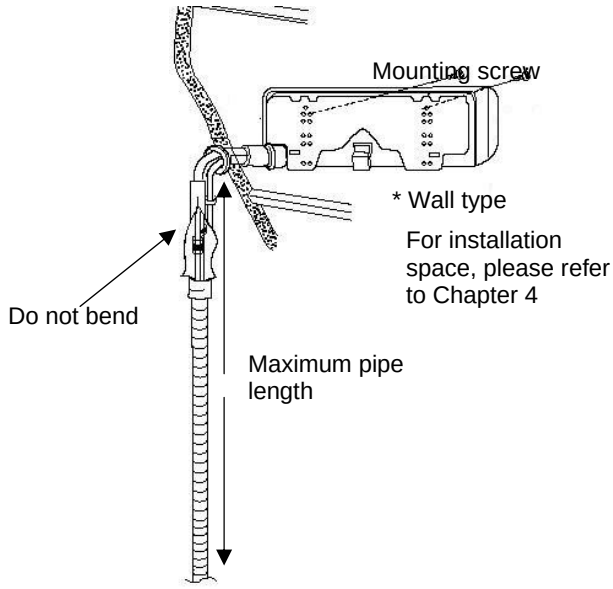

NOTE:

The connecting pipe should be insulated with insulation pipe and then wrapped with vinyl tape. The insulator will deteriorate if it is not properly wrapped with tape.

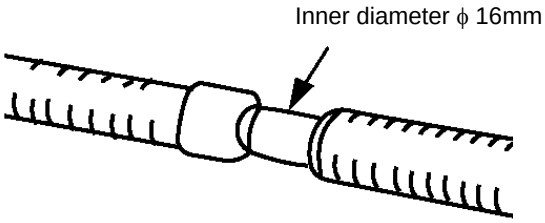

Models: Wall type	Maximum piping length (m)	Minimum piping length (m)	Maximum height (m)
RAK-18NH5	Refer outdoor	5	10
RAK-25NH5		5	10
RAK-35NH5		5	10
RAK-50NH5		5	10
RAK-65NH5		5	10
RAS-18YH5	20	5	10
RAS-25YH5	20	5	10
RAS-35YH5	20	5	10
RAS-50YH5	20	5	10
RAS-60YH5	30	5	10
RAS-70YH5	30	5	10
RAS-80YH5	30	5	10
RAS-07G4/GH4	10	5	5
RAS-09G4/GH4	10	5	5
RAS-14G4/GH4	15	5	5
RAS-18G4/GH4	15	5	5
RAS-24G4/GH4	15	5	5

10.2.2 INSTALLATION OF 4 WAY CEILING CASSETTE

- Install the indoor unit with a proper clearance around it for operation and maintenance working space, as shown below (Space around Indoor Unit).
- Provide a service access door near the unit piping connection area on the ceiling.

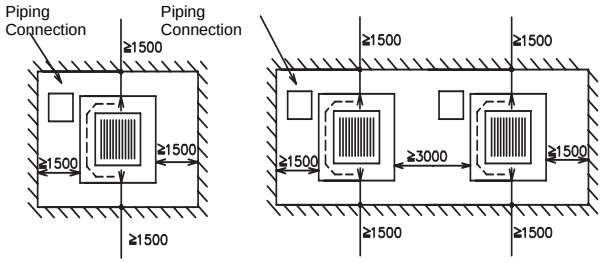

Distance from Wall Side

- Check space between ceiling and false ceiling is enough as indicated below.
- Check the ceiling surface is flat for the air panel installation work.

NOTE:

Confirm the position of air outlets before installing the unit.

10.2.2.1 Opening of false ceiling and suspension bolt

Cut out the area for the indoor unit in the false ceiling and install suspension bolts, as shown below.

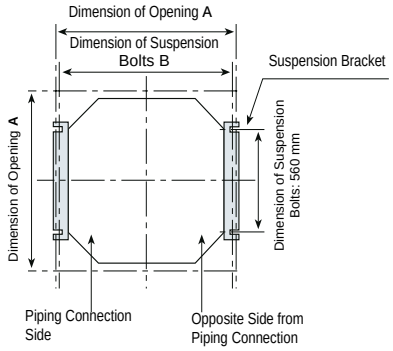

Check to ensure that the ceiling is horizontally level, otherwise water cannot flow.

Strengthen the opening parts of the false ceiling.

10.2.2.2 Installation

■ Mounting of Suspension Brackets

Mount the suspension brackets to the sling bolts and secure them with nuts as shown below

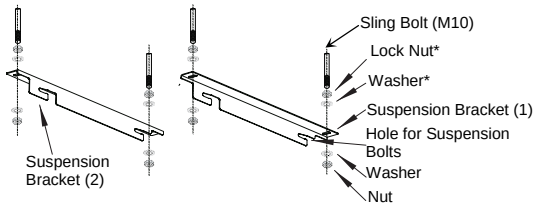

■ Mounting of Indoor Unit

Lift the indoor unit by hoist, and do not put any force on the drain pan
Consider piping connection side before lift indoor unit
Hook the indoor unit on the suspension brackets, by setting the mounting bolts on the notches of the bracket, as shown below

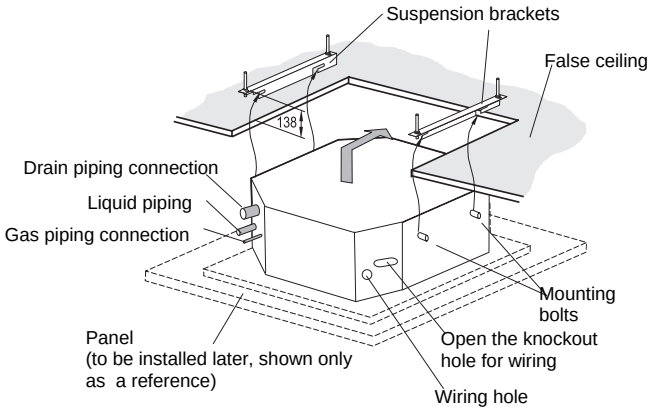

NOTE:

If a false ceiling has already been installed, complete all piping and wiring work inside the ceiling before hooking-up the indoor unit.

Secure the indoor unit using the nuts, flat washers and spring washers.

■ Adjusting of Space Between Indoor Units and False Ceiling Opening

- Check the level of the drain pan by a water level to avoid incorrect operation of the drain discharge mechanism in the indoor unit.
- Tighten the nuts of the suspension brackets after the adjustment is completed. Special plastic paint must be applied to the bolts and nuts in order to prevent them from loosening. If not done, abnormal noises or sounds may occur and the indoor unit may come loose.

10.2.2.3 Air Panels for Installation

RAI-ECPM

CAUTION:

When the air panel is unpacked, place it on insulation material, etc. to protect the sealing insulation from scratches.

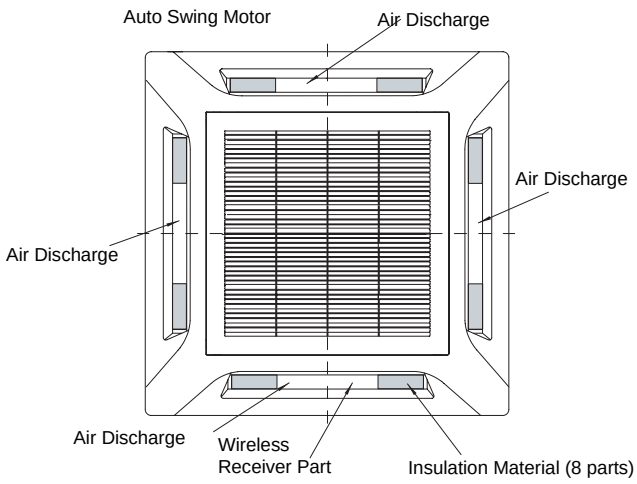

Check to ensure that the suspension brackets (field-supplied) of the indoor unit are located approximately 138mm higher than the false ceiling.

■ **Remove Air Intake Grille from Air Panel following the next Steps:**

1. Open the air intake grille to an angle of 30º to 45º from the surface of the air panel.

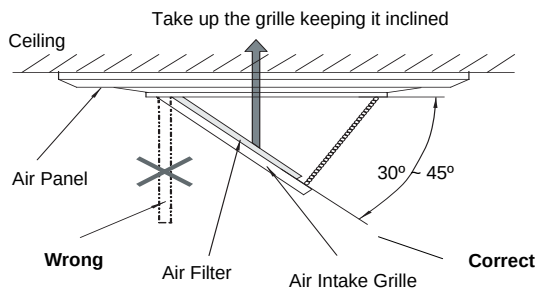

2. Lift the grille keeping it inclined.
3. Draw the grille towards the open space after lifting.

■ **Installing Air Panel following the next steps:**

1. Hang the air panel from the indoor unit by hooking the U-shaped wires of the air panel into the hook wires of the indoor unit.
2. Check to ensure that the location of the orange colored mark of the indoor unit coincides with the location of the same colored mark of the air panel.
3. Raise up the air panel onto the indoor unit, then fix the air panel by using factory-supplied long screws.

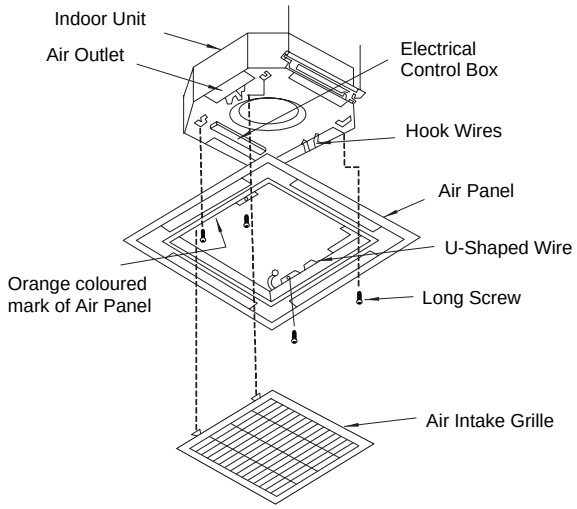

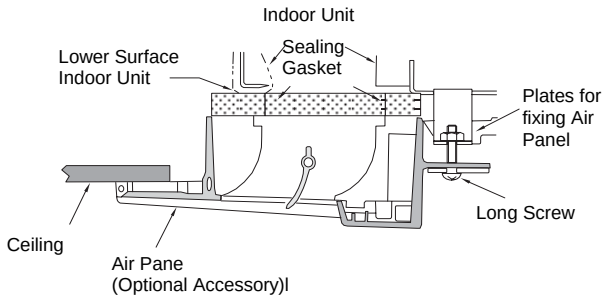

4. Check to ensure that there is no gap around the contacting surface between the indoor unit and the air panel. Any gap may cause air leakage or dewing.

To protect the panel from being damaged, the long screws for securing the air panel have stoppers so that tightening is stopped at the setting position. If the air panel does not reach the surface of the ceiling or air leakage from the contacting surface occurs, readjust the installation height level of the indoor unit.

CAUTION:

Do not turn the air louver by hand. If moved, the louver mechanism will be damaged.

10.2.3 INSTALLATION OF DUCT TYPE INDOOR

10.2.3.1 Installation

■ **Mounting of sling bolts and hanging the Indoor Unit**

Using the correct dimension shown in chapter 4, select the final location and installation direction of the Indoor Unit paying careful attention to the space for the piping, wiring and maintenance.

Install the sling bolts, M10 or greater are also recommended, and suspend the indoor unit using the following steps:

1. Hook suspension bracket to the nut and washer of each sling bolt, as shown, starting from one side
2. After check the nut and washer are correctly fixed by the retainers of the suspension bracket, hook the suspension bracket of the other side to nut and washer.

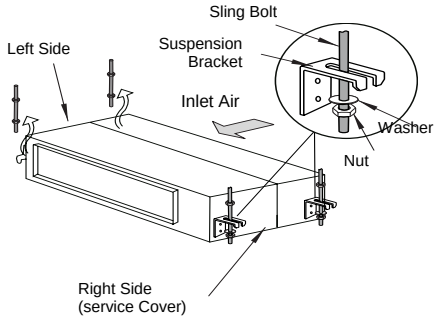

10.2.3.2 Drain Pan Level

Check to ensure that the foundation is flat, taking into account the maximum foundation gradient.

Front View

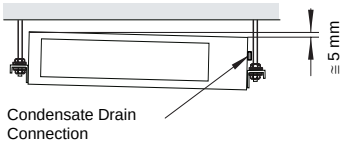

The unit should be installed so that one side of the unit is slightly (approximately 5mm) lower than the other side, in order to avoid the incorrect position of the drain discharge.

Tighten the nuts of the suspension bolts with the suspension brackets after adjustment is completed. Special plastic paint must be applied to the bolts and nuts in order to prevent them from loosening.

NOTE:

Keep the unit as well as relevant equipment covered with the vinyl cover during installation work.

10.2.4 INSTALLATION OF OUTDOOR UNIT

WARNING:

The unit should be mounted at stable, non vibratory location which can provide full support to the unit.

CAUTION:

Do not install the unit near heat source or obstruction near the air outlet.

The installation location must be of convenience for water drainage.

Place the outdoor unit on the mounting stand (optional) or on blocks to raise its level more than 100mm from the ground surface.

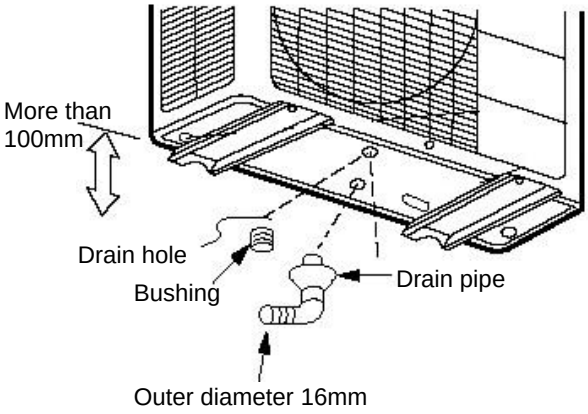

Models: Wall type	Maximum piping length (m)	Minimum piping length	Maximum height (m)	Maximum difference between indoor (m)
RAC-25NH5	20	5	10	-
RAC-35NH5	20	5	10	-
RAC-50NH5	20	5	10	-
RAC-65NH5	30	5	10	-
RAM-40QH5	35	5	10	5
RAM-55QH5	35	5	10	5
RAM-65QH5	45	5	10	5
RAM-72QH5	60	5	10	5
RAM-80QH5	70	5	10	5
RAC-18YH5	20	5	10	-
RAC-25YH5	20	5	10	-
RAC-35YH5	20	5	10	-
RAC-50YH5	20	5	10	-
RAC-60YH5	30	5	10	-
RAC-70YH5	30	5	10	-
RAC-80YH5	30	5	10	-
RAC-07G4	10	5	5	-
RAC-09G4	10	5	5	-
RAC-14G4	15	5	5	-
RAC-18G4	15	5	5	-
RAC-24G4	15	5	5	-
RAC-07GH4	10	5	5	-
RAC-09GH4	10	5	5	-
RAC-14GH4	15	5	5	-
RAC-18GH4	15	5	5	-
RAC-24GH4	15	5	5	-

**Please refer to the diagram below*

NOTE:

Please refer to the maximum combination table for multi outdoor unit in Chapter 4.

The connecting pipe should be insulated with insulation pipe and then wrapped with vinyl tape. The insulator will deteriorate if it is not properly wrapped with tape.

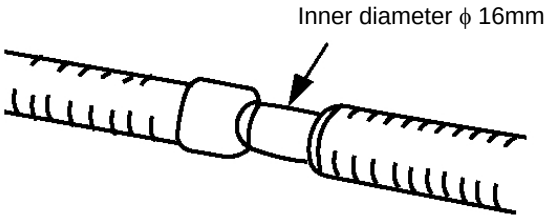

11 REFRIGERANT PIPING AND REFRIGERANT CHARGE

CONTENTS

11 REFRIGERANT PIPING AND REFRIGERANT CHARGE 11-1
11.1. Refrigerant Piping 11-2
11.1.1. Refrigerant charged method 11-2

11.1. REFRIGERANT PIPING

11.1.1. REFRIGERANT CHARGED METHOD

- Remove the flare nut and seal cap from the service valve.
- Apply refrigerator oil to the service valve and the flared portion of the pipe.
- Using a wrench, securely tighten.

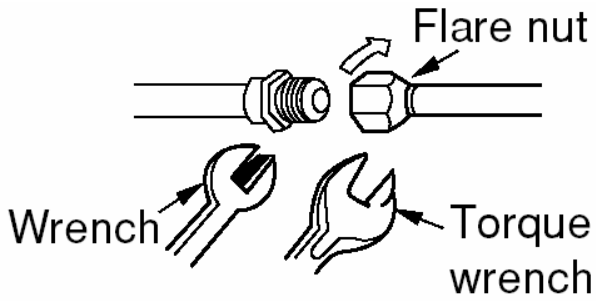

1. Remove the valve cap of valve core.
2. Connect the charge hoses to the vacuum pump and the charge port of the valve core large diameter pipe side service valve, respectively.
3. Fully open the LO knob of the manifold valve.
4. Run the vacuum pump.
5. Open the valve cap from the spindle of the service valve.
6. Turn the spindles of each large and small diameter pipe side service valves full counterclockwise until there are securely tightened. Then retighten them more than 10 degrees.
7. Disconnect the charge hose from the service valve.
8. Attach the valve cap to the spindles of each large and small diameter pipe side service valve.

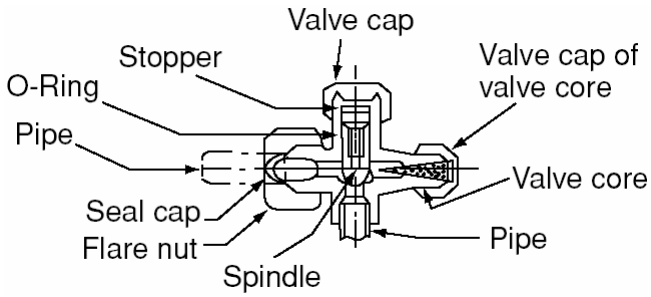

When meter reaches –101kPa during pumping, fully tighten the shuttle.

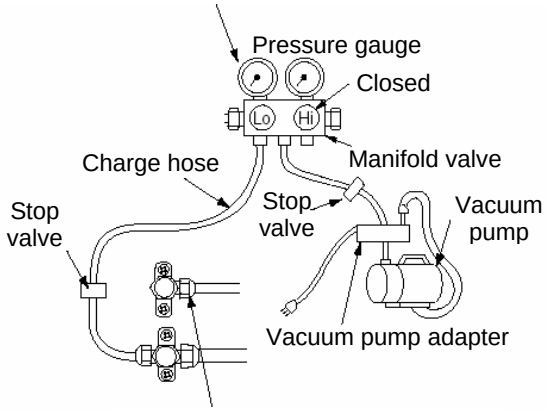

When pumping starts, slightly loosen the flare nut to check of air sucked in. Then tighten the flare nut

WARNING:

- *Please ensure that the air conditioner is in normal operating condition during the operation test.*

12 DRAIN PIPING

CONTENTS

12 DRAIN PIPING 12-1
12.1 General 12-2
12.2 Drain pump 12-3
12.2.1 Build in drain pump 12-3
12.2.2 Specification of drain pump 12-3

12.1 GENERAL

CAUTION:

– *Do not create an upper-slope or rise for the drain piping, since drain water will flow back to the unit and leakage to the room will occur when the unit operation is stopped.*

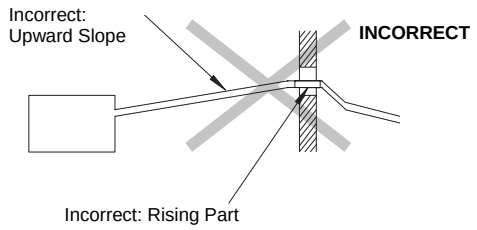

– *Do not connect the drainpipe with sanitary or sewage piping or any other drainage piping.*

– *When the common drain piping is connected with other indoor units, the connected position of each indoor unit must be higher than the common piping. The pipe size of the common drainpipe must be large enough according to the unit size and number of unit.*

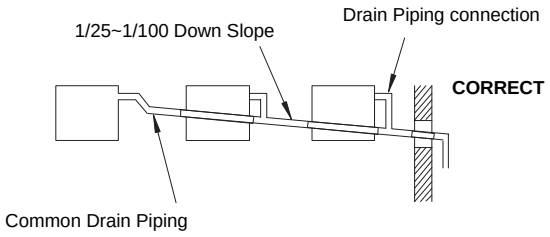

– *Drain piping will require insulating if the drain is installed in a location where condensation forming on the outside of drain pipe may drop and cause damage. The insulation for the drainpipe must be selected to insure vapor sealing and prevent condensation forming.*

– *Drain trap should be installed next to indoor unit. This trap must be designed to good practice and be checked with water (charged) and tested for correct flow.*
Do not tie or clamp the drain pipe and refrigerant pipe together.

NOTE:

Install drainage in accordance with national and local codes.

After performing drain piping work and electrical wiring, check to ensure that water flows smoothly as in the following procedure:

■ Checking Unit without Drain-up Mechanism

– Pour approximately 1.8 liters of water into the drain pan.

– Check to ensure that the water flows smoothly or whether no water leakage occurs. When water cannot be found at the end of the drain piping, pour another approximately 1.8 liters of water into the drain pan.

■ Checking with Drain-Up Mechanism and Float Switch

– Switch ON the power supply.

– Pour approximately 1.8 liters of water into the drain pan, then float switch up and drain pump start working automatically.

– Check to ensure that the water flows smoothly or whether no water leakage occurs. When water cannot be found at the end of the drain piping, pour another approximately 1.8 liters of water into the drain pan.

– Switch OFF the power supply after.

NOTE:

Pay attention to the thickness of the insulation when the left side piping is performed. If it is too thick, piping can not be installed in the unit.

12.2 DRAIN PUMP

12.2.1 BUILD IN DRAIN PUMP

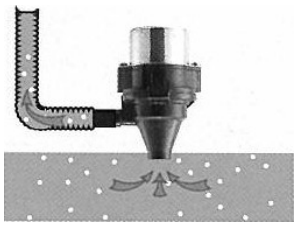

The air conditioner is equipped with an internal drain pump to remove accumulated condensation water from drain pan even while it is operating. A float switch monitors the water level and automatically activates the pump as necessary.

*Applicable for ceiling cassette type only.

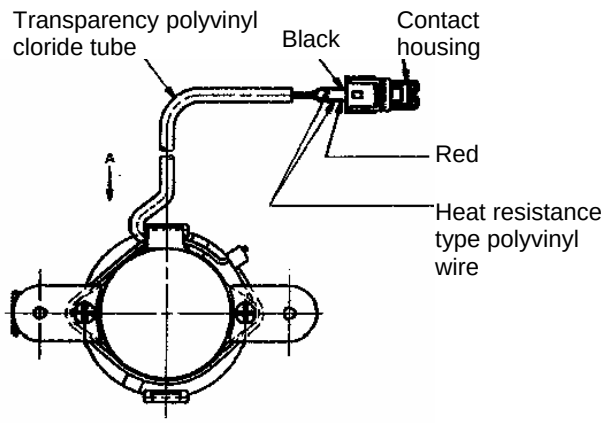

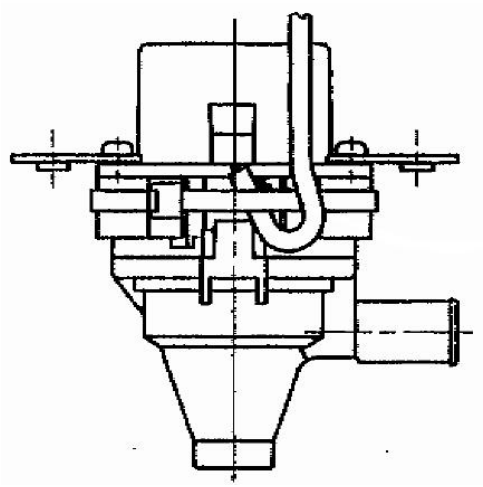

12.2.2 SPECIFICATION OF DRAIN PUMP

Fluid	Water
Operation temperature	Fluid temperature 0~40°C Ambient temperature 0~40°C Humidity ~95%
Storage temperature	-10~70°C
Mounting	Shall be install upward Slanting gradient should be less than 5 degree
Motor type	DC brushless motor (insulation class E)
Discharge volume	Lift 300mm water in rated voltage
Minimum water level	8mm
Noise	45dB max
Insulation resistance	100MΩ at DC500V
Life span	Operate continuously up to 10000 hours, under 300mm lift, 10mm water level, rated voltage, and rated water temperature

13 ELECTRICAL WIRING

CONTENTS

13 ELECTRICAL WIRING 13-1
13.1 General Check 13-2
13.2 Electrical wiring for Indoor Unit 13-2
13.2.1 Electrical Wiring Connection 13-2
13.3 Electrical wiring for Outdoor Unit 13-3
13.3.1 Electrical Wiring Connection 13-3

13.1 GENERAL CHECK

ATTENTION:

- *Turn OFF the main power switch to the indoor unit and the outdoor unit before electrical wiring work or a periodical check is performed.*
- *Check to ensure that the indoor fan and the outdoor fan have stopped before electrical wiring work or a periodical check is performed.*
- *Protect the wires, drain pipe, electrical parts, etc. from rats or other small animals. If not protected, rats or other small animals may gnaw at unprotected parts and at the worst, a fire will occur.*
- *Avoid the wires from touching the refrigerant pipes, plate edges and electrical parts inside the unit. Otherwise, the wires will be damaged and at the worst, a fire will occur.*

CAUTION:

Tightly secure the wires with the cord clamp inside the indoor unit.

NOTE:

Fix the rubber bushes with adhesive when conduit tubes to the outdoor unit are not used.

1. Make sure that the field-selected electrical components (main power switches, circuit breakers, wires, conduit connectors and wire terminals) have been properly selected according to the electrical data given in this technical catalog. Make sure that the components comply with National Electrical Code (NEC).
2. Check to ensure that the power supply voltage is within ±10% of the rated voltage.
3. Check the capacity of the electrical wires. If the power source capacity is too low, the system cannot be started due to the voltage drop.
4. Check to ensure that the ground wire is connected.
5. Power Source Main Switch
   Install a multi-pole main switch with a space of 3.5mm or more between each phase.

13.2 ELECTRICAL WIRING FOR INDOOR UNIT

13.2.1 ELECTRICAL WIRING CONNECTION

- Remove the front panel and electrical cover to expose the electrical box in the indoor unit.
- Insert the connecting cord from the bottom of the unit.
- Fixed the wire firmly to the therminal.

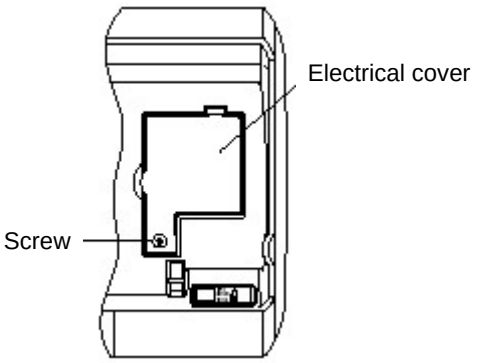

Before installation, it is necessary to check the power source and wiring work. To ensure the wiring capacity is proper, use the table below as a guideline for the indoor/outdoor connecting cord for the wiring from the switchboard and outdoor unit in consideration of the locked rotor current.

Cable length	Wire cross section
Up to 6m	1.5mm^2
Up to 15m	2.5mm^2
Up to 25m	4.0 mm^2

Installation procedure and and notice

- In the electrical installation a separator with a contact gap of more than 3mm has to be installed. During cleaning or servicing the set has to be switched off with this separator.
- Connect the electrical wiring correctly as shown. In case of wrong connection, the unit does not operate properly and it may cause malfunction.
- The connecting cord must be fixed by the band which is located near the terminal board.

Connection of connecting cords and power cord

- Cut of the connecting cord, the power cord and strip the insulation of the wire.

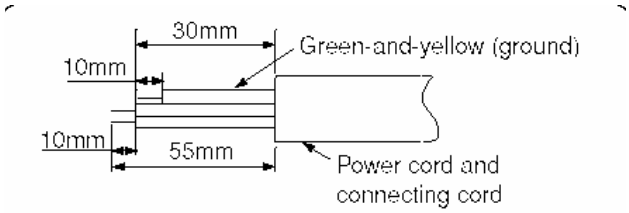

- Connect the connecting cord and power cord to the terminal board.
- Fix the connecting cords and power cord with steel band certainly.

WARNING:

- *The naked part of the wire core should be10 mm and fix tem tightly to the terminal. Then try to pull the individual wireto check if the contact is tight. Improper insertion may cause the terminal to burn.*
- *Be sure to use only power cables approved from the authorities from your country.*

13.3 ELECTRICAL WIRING FOR OUTDOOR UNIT

13.3.1 ELECTRICAL WIRING CONNECTION

– Keep the space around the unit for maintenance and avoiding the effect of hindrance for normal ventilation of the unit.

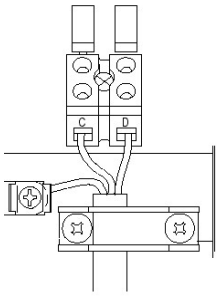	*For Inverter models, RAK-18NH5 RAK-25NH5 RAK-35NH5 RAK-50NH5 RAK-65NH5 RAI-25NH5 RAI-35NH5 RAI-50NH5 RAD-25NH5 RAD-35NH5 RAF-25NH5 RAF-35NH5 RAF-50NH5 *For cooling models: RAS-07G4 / RAC-07G4 RAS-09G4 / RAC-09G4 RAS-14G4 / RAC-14G4 RAS-18G4 / RAC-18G4 RAS-24G4 / RAC-24G4
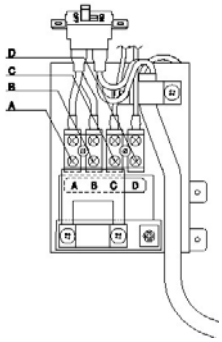	*For heatpump models: RAS-07GH4 / RAC-07GH4 RAS-09GH4 / RAC-09GH4 RAS-14GH4 / RAC-14GH4 RAS-18GH4 / RAC-18GH4 RAS-24GH4 / RAC-24GH4 RAS-18YH5 / RAC-18YH5 RAS-25YH5 / RAC-25YH5 RAS-35YH5 / RAC-35YH5 RAS-50YH5 / RAC-50YH5 RAS-60YH5 / RAC-60YH5 RAS-70YH5 / RAC-70YH5 RAS-80YH5 / RAC-80YH5

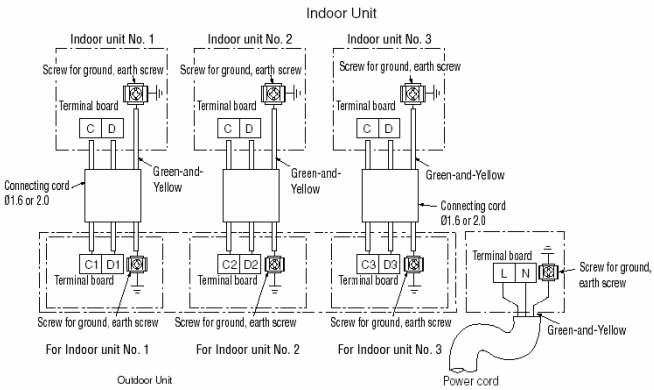

*For multi models:
RAM-40QH5
RAM-55QH5
RAM-65QH5
RAM-72QH5
RAM-80QH5

*All diagram shown is for sample purposes, does not represent the true wiring for each model

Installation procedure and and notice

– In the electrical installation a separator with a contact gap of more than 3mm has to be installed. During cleaning or servicing the set has to be switched off with this separator.

– Connect the electrical wiring correctly as shown. In case of wrong connection, the unit does not operate properly and it may cause malfunction.

– The connecting cord must be fixed by the band which is located near the terminal board.

Connection of connecting cords and power cord

– Cut of the connecting cord, the power cord and strip the insulation of the wire.

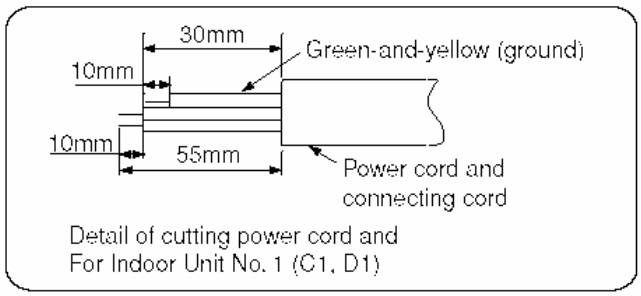

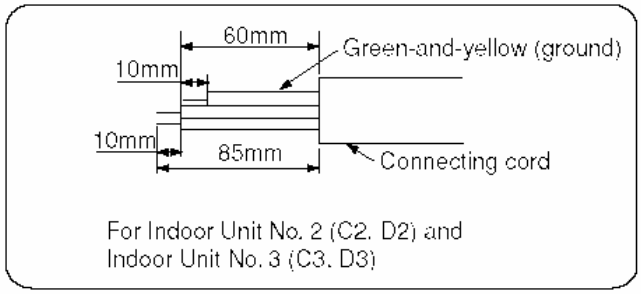

– Connect the connecting cord and power cord to the terminal board.

– Fix the connecting cords and power cord with steel band certainly.

WARNING:

– *The naked part of the wire core should be10 mm and fix tem tightly to the terminal. Then try to pull the individual wireto check if the contact is tight. Improper insertion may cause the terminal to burn.*

– *Be sure to use only power cables approved from the authorities from your country.*

14 TROUBLESHOOTING

CONTENTS

14 TROUBLESHOOTING 14-1

14.1 Initial Troubleshooting 14-2

14.1.1 Precaution for troubleshooting 14-2
14.1.2 RAC-25NH5, RAC-35NH5, RAC-50NH5, RAC-65NH5 14-3
14.1.3 RAC-18YH5, RAC-25YH5, RAC-35YH5 14-4
14.1.4 RAM-55QH5, RAM-65QH5 14-5

14.2 Troubleshooting Flow Chart 14-6

14.2.1 Preliminary check 14-6
14.2.2 Checking the indoor unit electrical parts 14-7
14.2.3 Checking the remote controller 14-10
14.2.4 Checking the outdoor unit 14-10

14.3 Fault Finding Chart 14-11

14.3.1 RAK-25NH5, RAK-35NH5, RAK-50NH5,RAK-65NH5 14-11
14.3.2 RAI-25NH5 RAI-35NH5,RAI-50NH5, RAD-25NH5, RAD-35NH5 14-12
14.3.3 RAF-25NH5, RAF-35NH5, RAF-50NH5 14-13
14.3.4 RAS-07G4, RAS-09G4, RAS-14G4, RAS-18G4, RAS-24G4 14-14
14.3.5 RAS-07GH4, RAS-09GH4, RAS-14GH4, RAS-18GH4, RAS-24GH4 14-15
14.3.6 RAS-18YH5, RAS-25YH5, RAS-35YH5, RAS-50YH5, RAS-60YH5, RAS-70YH5 RAS-80YH5 14-16
14.3.7 RAC-25NH5, RAC-35NH5, RAC-50NH5, RAC-65NH5 14-17
14.3.8 RAC-18YH5, RAC-25YH5, RAC-35YH5, RAC-50YH5, RAC-60YH5, RAC-70YH5, RAC-80YH5 14-18
14.3.9 RAM-40QH5, RAM-55QH5, RAM 65QH5 , RAM-72QH5 , RAM-80QH5 14-19

14.4 Thermistor 14-21

14.4.1 Name and role of each thermistor 14-21
14.4.2 Reference value for thermistor’s resistance and temperature 14-21
14.4.3 Thermistor resistance-temperature graph 14-22

14.1 INITIAL TROUBLESHOOTING

14.1.1 PRECAUTION FOR TROUBLESHOOTING

Danger:

Be caution when handling the electrical parts. Switch off the power source before performing any checking or troubleshooting.

Always allow 10 minutes after switching off the power source before performing checking and troubleshooting. This allows the voltage to fall to ground level after the power source is switched off.

Always keep your hands and metallic conductors away from the oscilloscope. Do not install the ground lie from the oscilloscope.

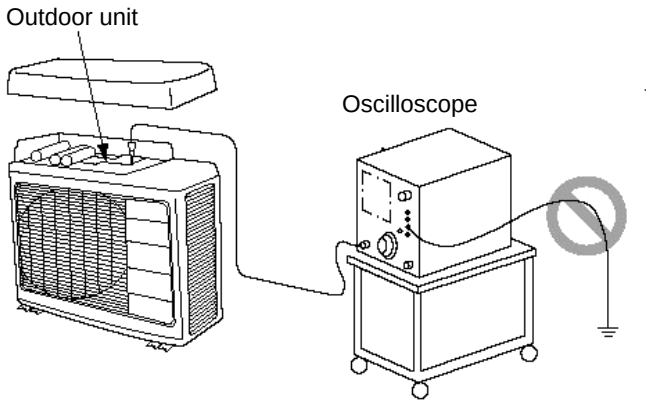

Procedure:

1. Turn off the power supply to the outdoor unit.
2. After the power supply is turn off. Wait for 10 minutes or more. Remove the electrical cover for access to the electrical board.
3. Apply soldering iron of 30 to 75W for 15 seconds or more to P2 and N1 terminals on the power system module to discharge the voltage in the smoothing capacitor.
4. Remove gray/red lead wire connected to the power system module from diode stack before performing operation.

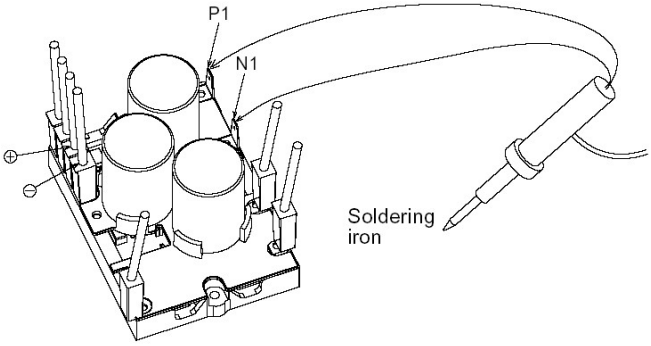

Warning:

Do not use a soldering iron with transformer to avoid thermal fuse inside the transformer to blow.

14.1.2 RAC-25NH5, RAC-35NH5, RAC-50NH5, RAC-65NH5

WARNING:

- *Voltage of about 360V is charged at both ends of smoothing capacitor.*
- *High voltage (DC 360V) is also charged at screw and terminal sections of system power module.*
- *During continuity check of each circuit of electrical parts in outdoor unit is performed, to prevent secondary trouble, disconnect re/grey wire connected to the system power module (SPM) from diode stack.*

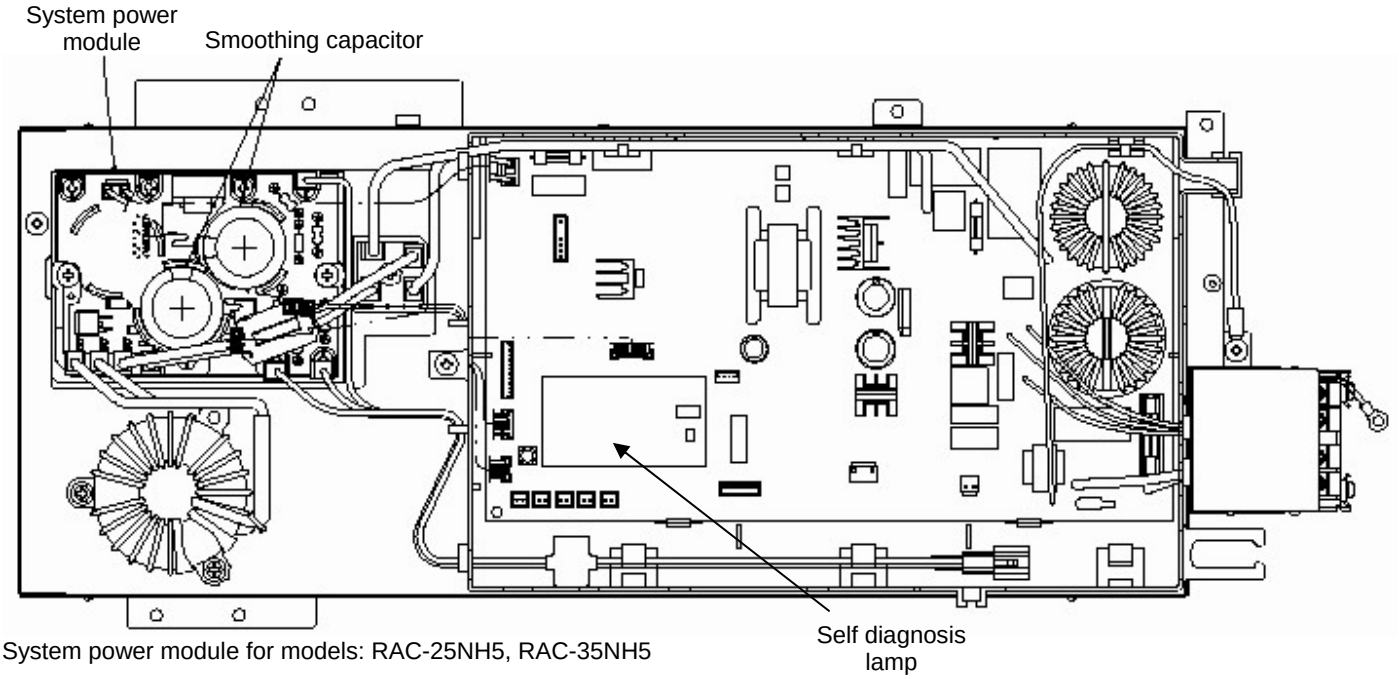

System power module for models: RAC-25NH5, RAC-35NH5

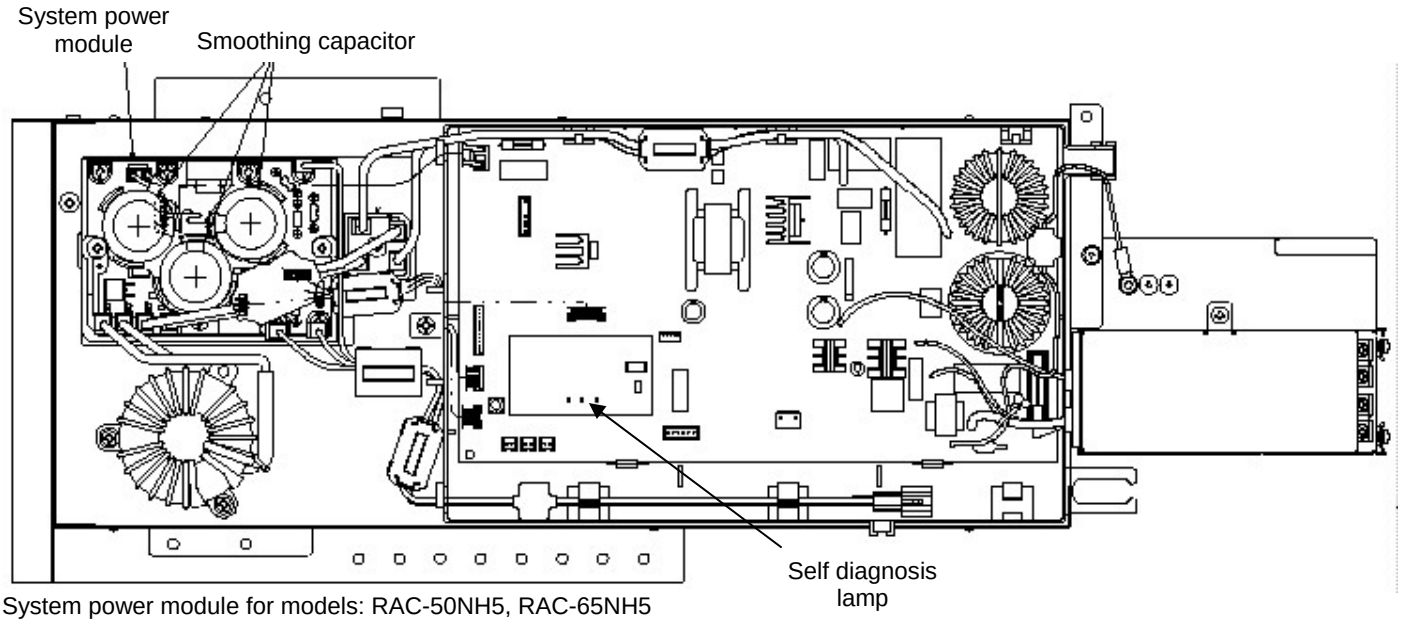

System power module for models: RAC-50NH5, RAC-65NH5

1. Disconnect power plug.
2. Wait for 10 minutes or more after power is turn off and then remove electrical parts box lid. Apply soldering iron of 30 to 75W for 15 seconds or more to P1 and N1 black/white lead receptacles on system power module to discharge voltage from smoothing capacitor.
3. Before operation check of each part of circuit, remove receptacle of red/grey lead connected to the system power module from diode stack.

NOTE:

Screws of system power module are live parts. Do not touch them.

14.1.3 RAC-18YH5, RAC-25YH5, RAC-35YH5

WARNING:

- *Voltage of about 360V is charged at both ends of smoothing capacitor.*
- *High voltage (DC 360V) is also charged at screw and terminal sections of system power module.*
- *During continuity check of each circuit of electrical parts in outdoor unit is performed, to prevent secondary trouble, disconnect re/grey wire connected to the system power module (SPM) from diode stack.*

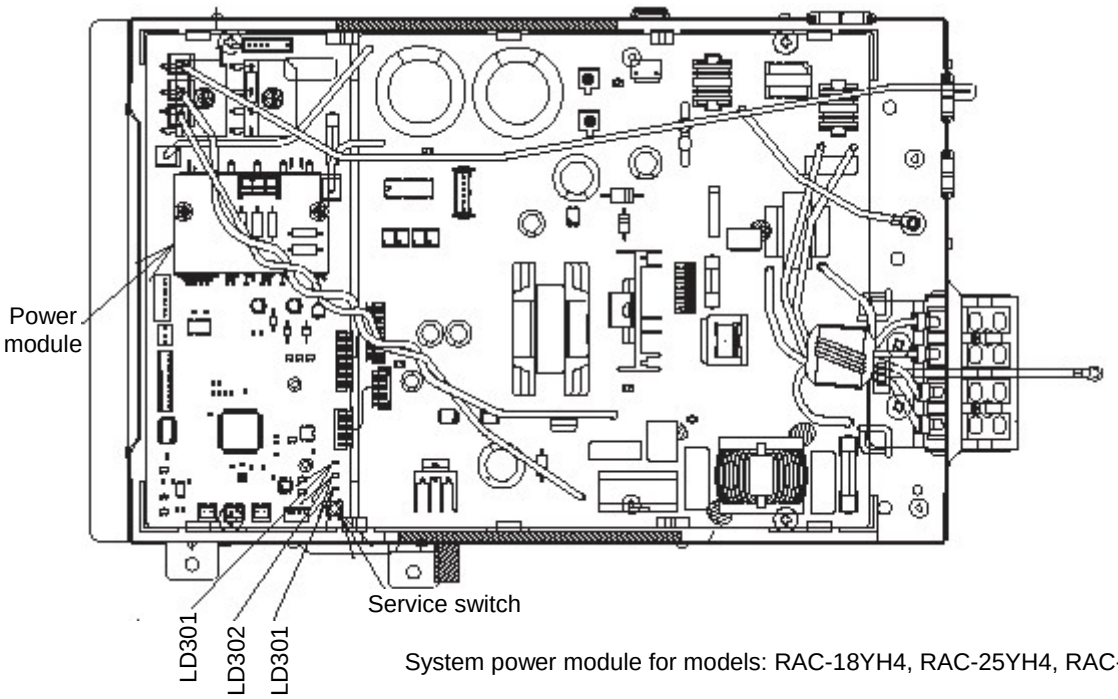

System power module for models: RAC-18YH4, RAC-25YH4, RAC-35YH4

4. Disconnect power plug.
5. Wait for 10 minutes or more after power is turn off and then remove electrical parts box lid. Apply soldering iron of 30 to 75W for 15 seconds or more to P1 and N1 black/white lead receptacles on system power module to discharge voltage from smoothing capacitor.
6. Before operation check of each part of circuit, remove receptacle of red/grey lead connected to the system power module from diode stack.

NOTE:

Screws of system power module are live parts. Do not touch them.

14.1.4 RAM-55QH5, RAM-65QH5

WARNING:

- *Voltage of about 360V is charged at both ends of smoothing capacitor 330μF x 3.*
- *High voltage (DC 360V) is also charged at screw and terminal sections of system power module.*
- *During continuity check of each circuit of electrical parts in outdoor unit is performed, to prevent secondary trouble, disconnect re/grey wire connected to the system power module (SPM) from diode stack.*

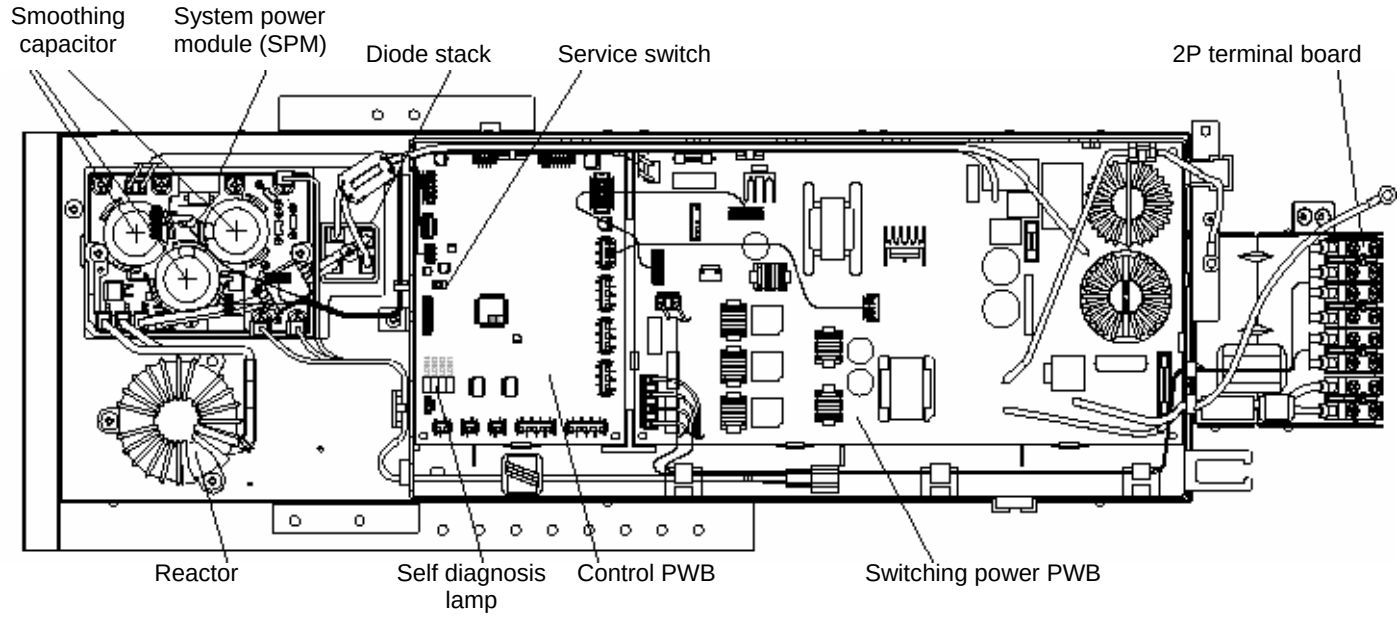

7. Disconnect power plug.
8. Wait for 10 minutes or more after power is turn off and then remove electrical parts box lid. Apply soldering iron of 30 to 75W for 15 seconds or more to P1 and N1 black/white lead receptacles on system power module to discharge voltage from smoothing capacitor.
9. Before operation check of each part of circuit, remove receptacle of red/grey lead connected to the system power module from diode stack.

NOTE:

Screws of system power module are live parts. Do not touch them.

14.2 TROUBLESHOOTING FLOW CHART

14.2.1 PRELIMINARY CHECK

Models: RAK-25NH5, RAK-35NH5, RAK-50NH5

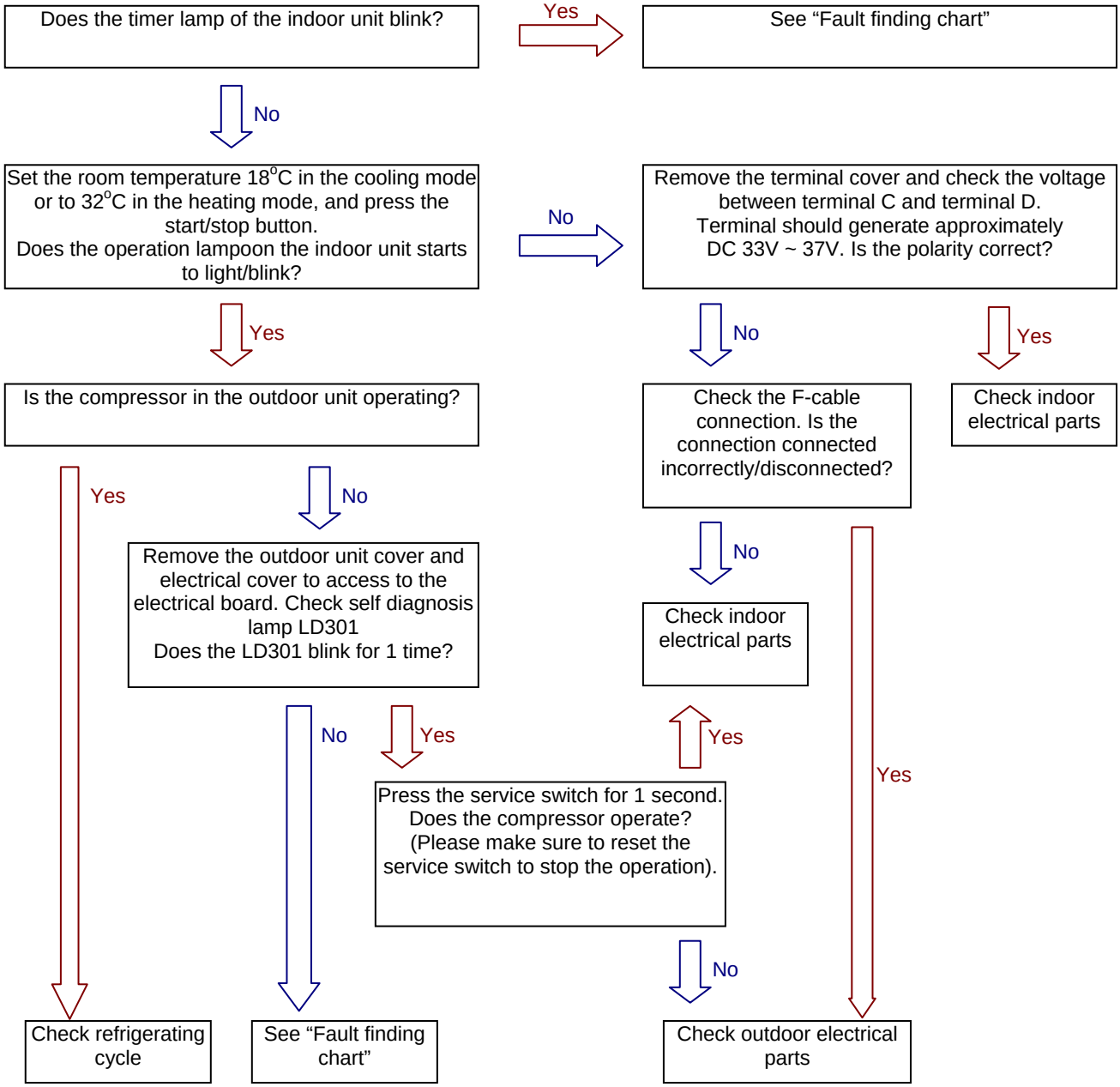

14.2.2 CHECKING THE INDOOR UNIT ELECTRICAL PARTS

1. Power does not operate (no operation)

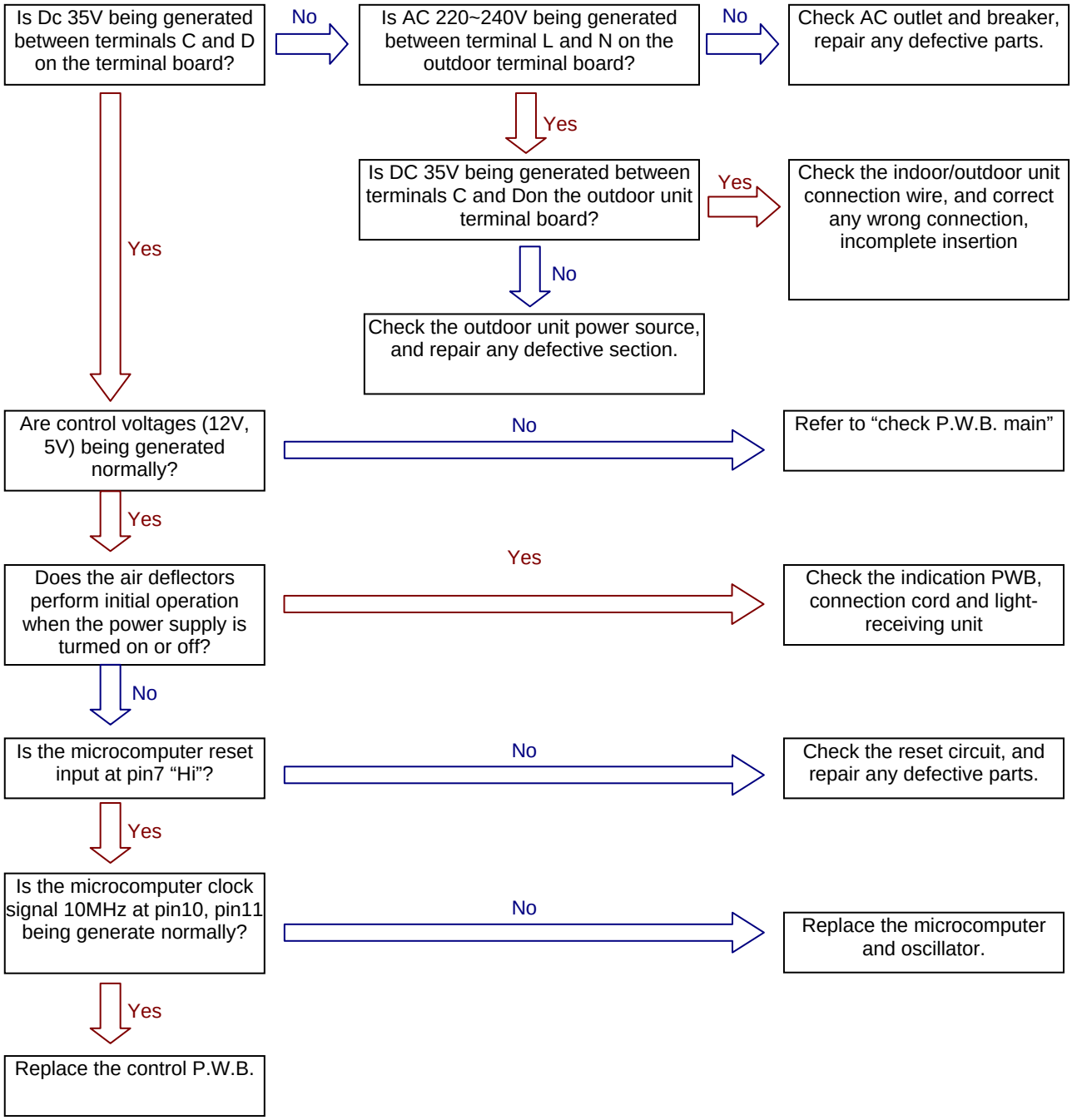

2. Outdoor unit does not operate

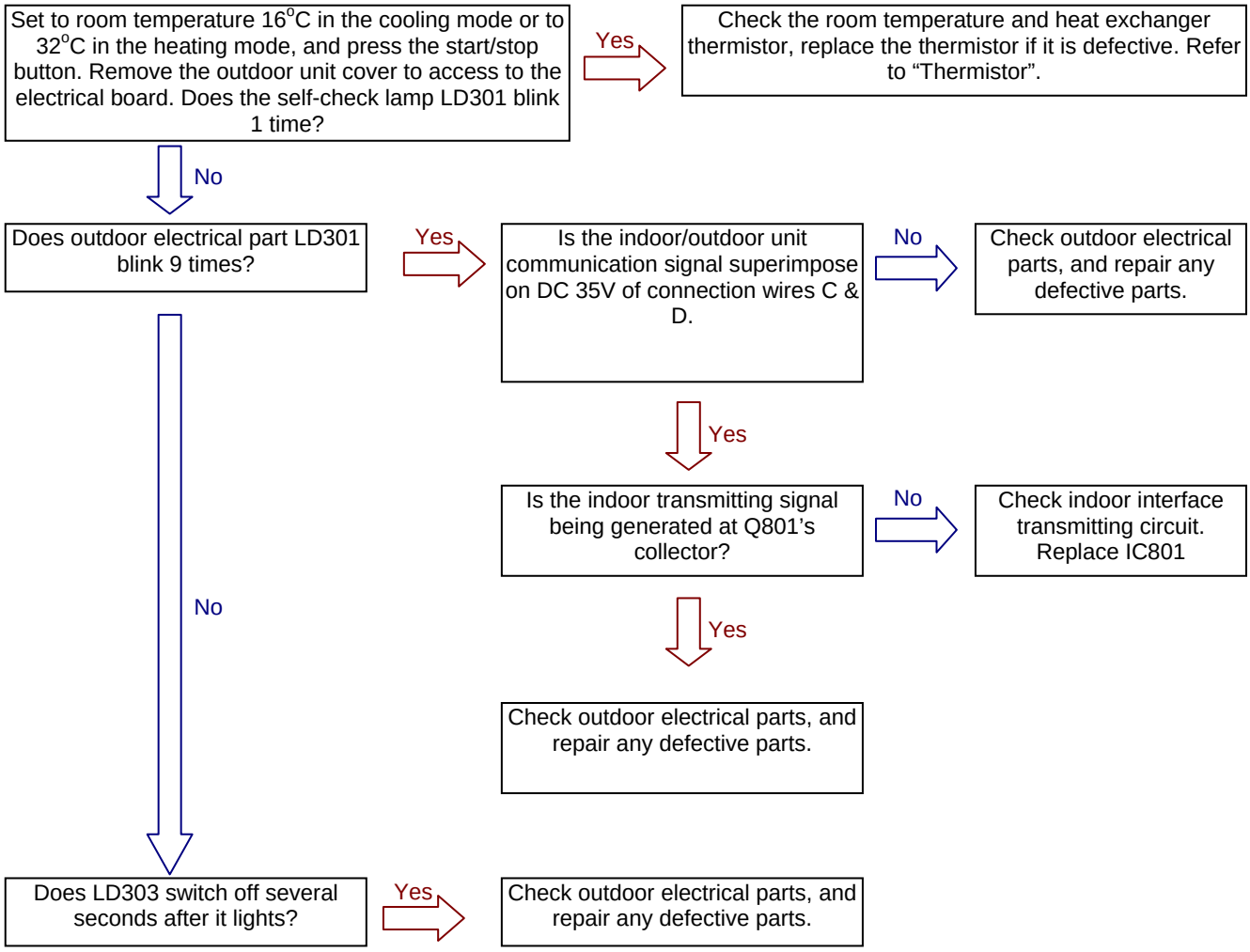

3. Indoor fan motor does not operate

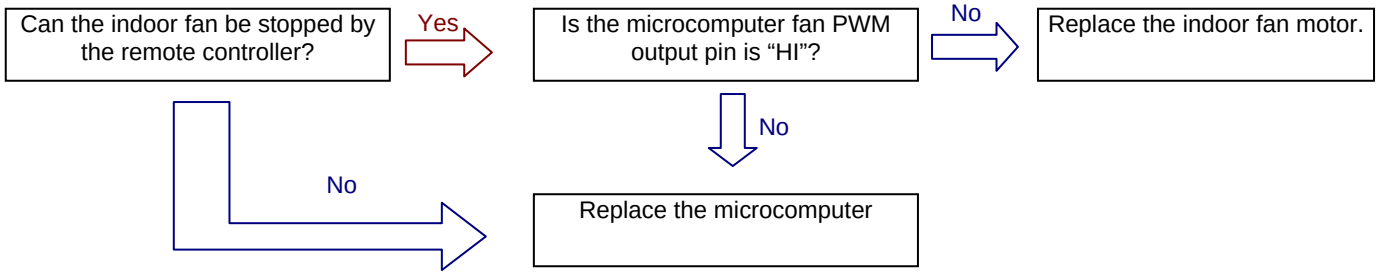

4. Air deflector does not move

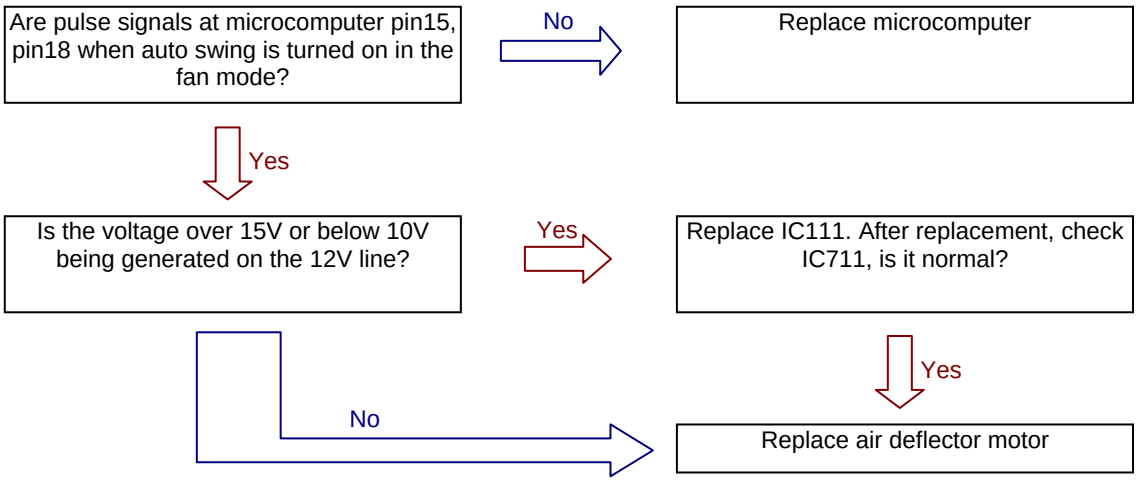

5. All system stop after operation is started.

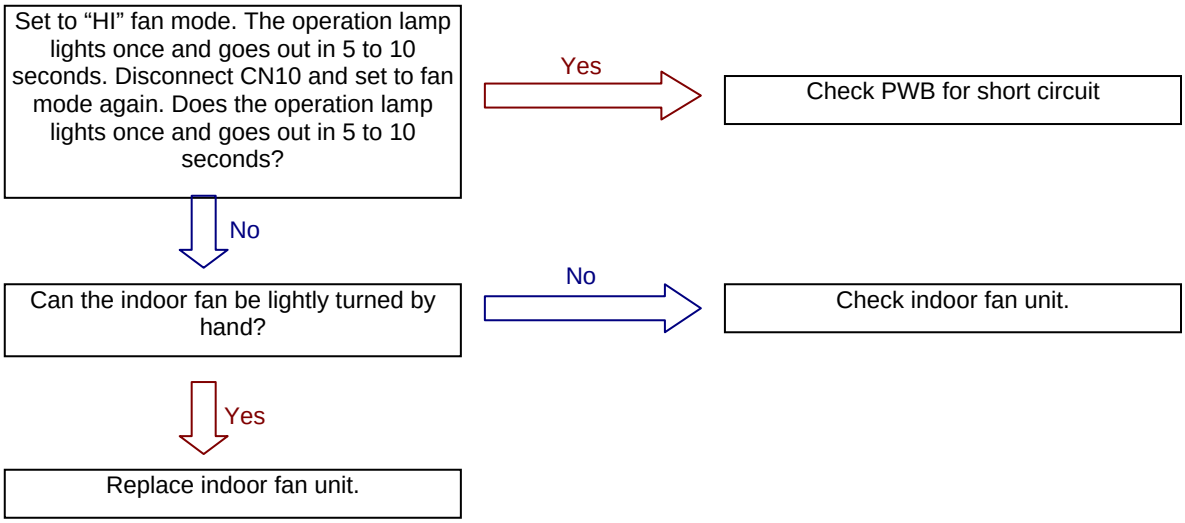

6. Check main P.W.B.

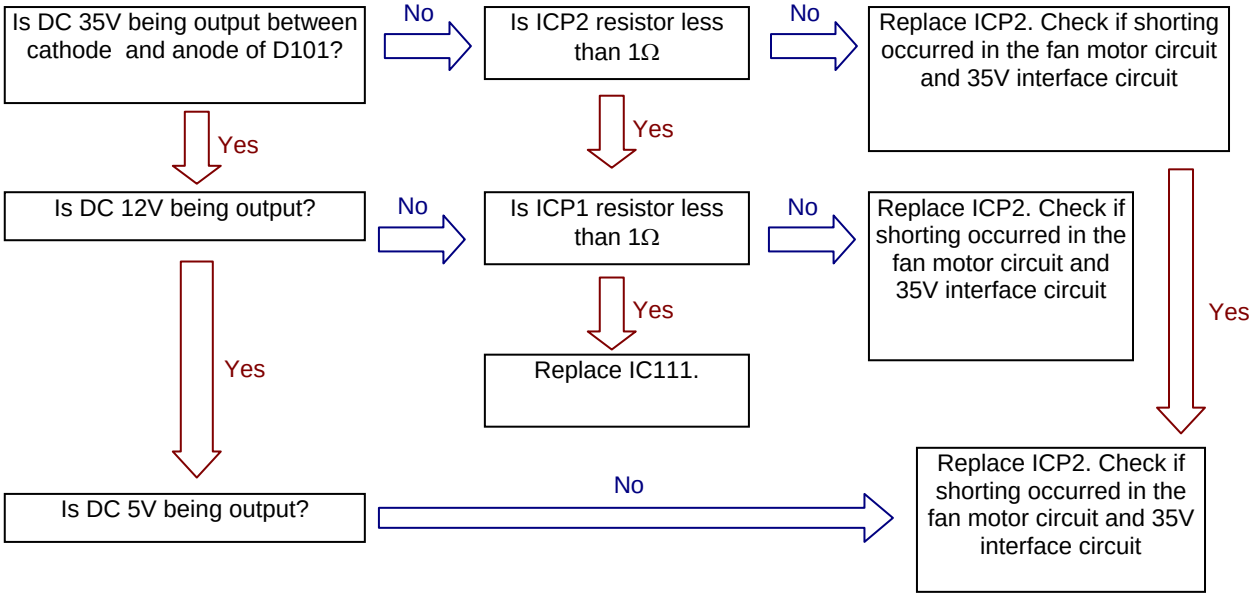

14.2.3 CHECKING THE REMOTE CONTROLLER

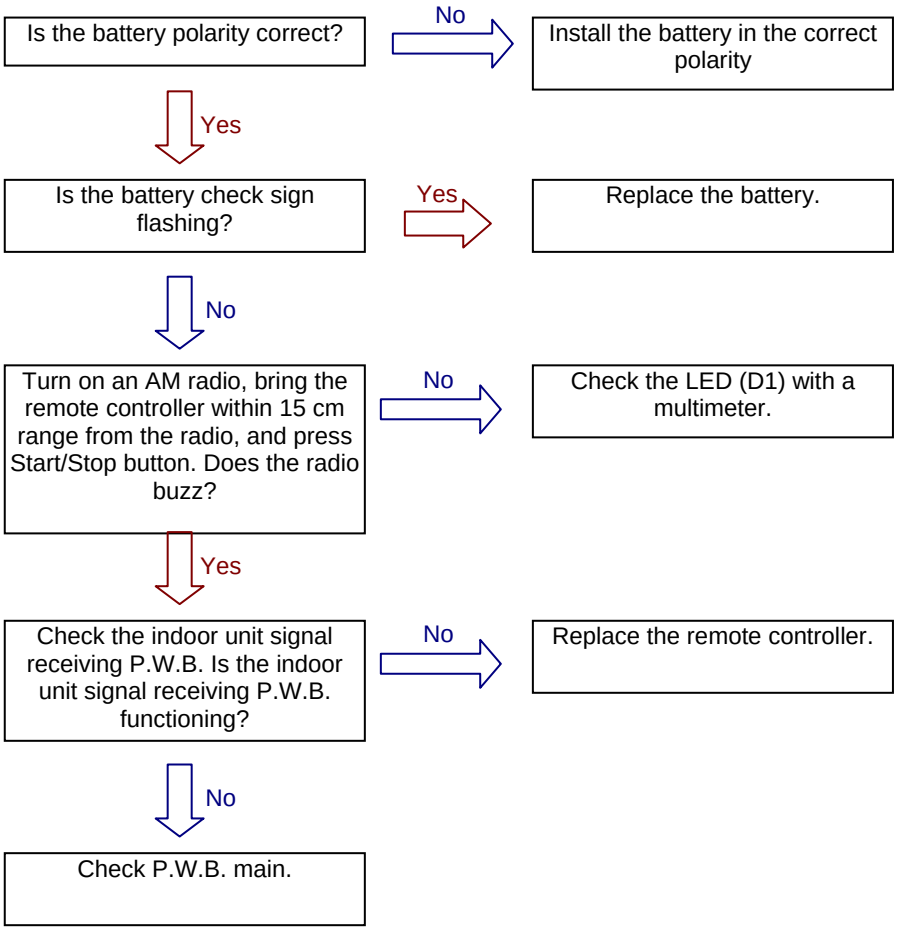

14.2.4 CHECKING THE OUTDOOR UNIT

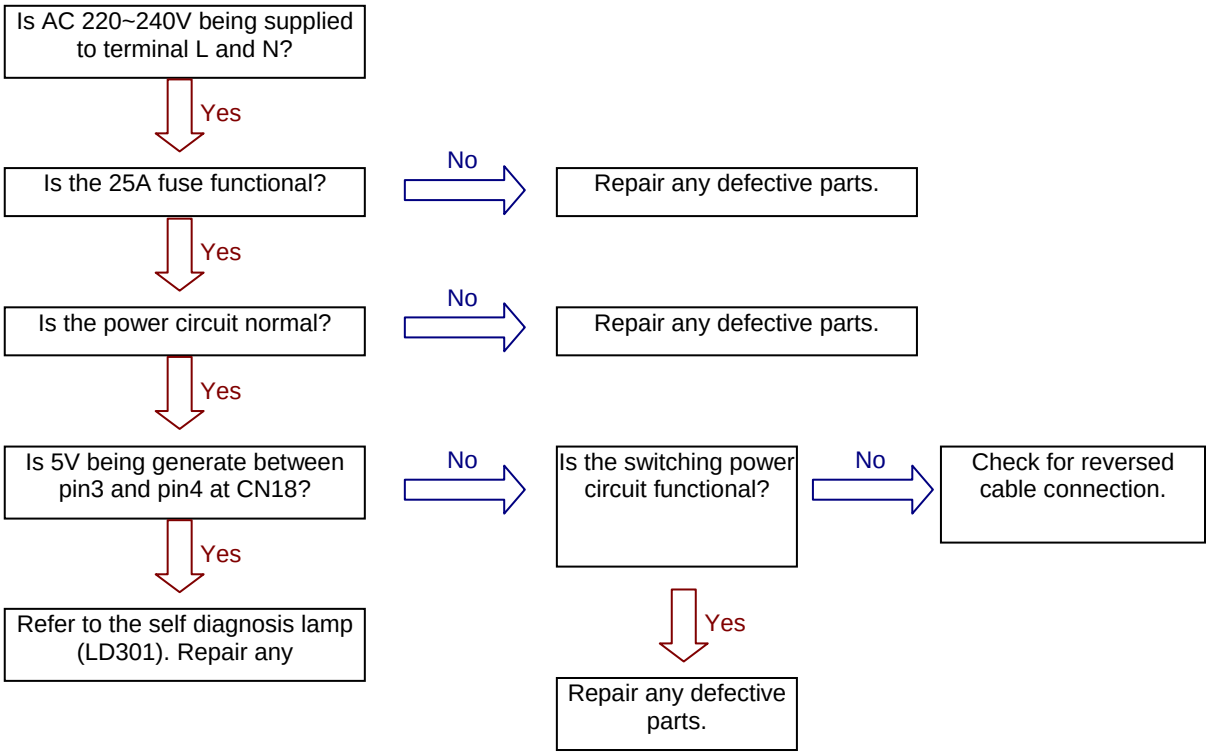

14.3 FAULT FINDING CHART

14.3.1 RAK-25NH5, RAK-35NH5, RAK-50NH5,RAK-65NH5

TIMER LAMP	DETAILS	MAIN CHECK POINT
1 time	Reversing valve defective	When indoor heat exchanger temperature is too low in heating mode, or it is too high in the cooling mode 1. Reversing valve defect 2. Heat exchanger thermistor disconnected (only in heating mode)
2 times	Outdoor unit forced operation	When the outdoor unit is in forced operation or balancing operation after forced operation. 1. Electrical parts in the outdoor unit
3 times	Indoor/Outdoor unit interface defective	When the interface signal from the outdoor unit is interrupted. 1. Indoor interface circuit 2. Outdoor interface circuit
4 times	Outdoor electrical assembly defective	1. Check outdoor electrical led lamp blinking (LD301) 2. Refer self diagnosis lighting mode for outdoor unit.
9 times	Fault at room thermistor or heat exchanger	When room thermistor or heat exchanger is opened circuit or short circuit 1. Room thermistor 2. Heat exchanger thermistor
10 times	Over current at DC fan motor	When over current is detected at the DC fan motor of the indoor unit 1. Fan motor locked 2. Indoor control P.W.B.
13 times	Data reading error	When data read from IC401 or IC402 is incorrect 1. IC401 2. IC402

NOTE:
If the interface circuit is faulty when power is supplied, the self-diagnosis display will not display.
Check the indoor unit F-cable if the indoor unit does not operate at all.

14.3.2 RAI-25NH5 RAI-35NH5,RAI-50NH5, RAD-25NH5, RAD-35NH5

TIMER LAMP	DETAILS	MAIN CHECK POINT
1 time	Reversing valve defective	When indoor heat exchanger temperature is too low in heating mode, or it is too high in the cooling mode 1. Reversing valve defect 2. Heat exchanger thermistor disconnected (only in heating mode)
2 times	Outdoor unit forced operation	When the outdoor unit is in forced operation or balancing operation after forced operation. 1. Electrical parts in the outdoor unit
3 times	Indoor/Outdoor unit interface defective	When the interface signal from the outdoor unit is interrupted. 1. Indoor interface circuit 2. Outdoor interface circuit
4 times	Outdoor electrical assembly defective	1. Check outdoor electrical led lamp blinking (LD301) 2. Refer self diagnosis lighting mode for outdoor unit.
6 times	Abnormal water level detection	Float switch activated 1. Drain pump 2. Float switch
7 times	Drain pump forced operation	Drain pump test switch at indoor P.W.B. main slide to “test” position. 1. Indoor P.W.B. (Main)
9 times	Fault at room thermistor or heat exchanger	When room thermistor or heat exchanger is opened circuit or short circuit 3. Room thermistor 4. Heat exchanger thermistor
10 times	Over current at DC fan motor	When over current is detected at the DC fan motor of the indoor unit 3. Fan motor locked 4. Indoor control P.W.B.
13 times	Data reading error	When data read from IC401 or IC402 is incorrect 3. IC401 4. IC402

NOTE:
If the interface circuit is faulty when power is supplied, the self-diagnosis display will not display.
Check the indoor unit F-cable if the indoor unit does not operate at all.

14.3.3 RAF-25NH5, RAF-35NH5, RAF-50NH5

TIMER LAMP	DETAILS	MAIN CHECK POINT
1 time	Reversing valve defective	When indoor heat exchanger temperature is too low in heating mode, or it is too high in the cooling mode 3. Reversing valve defect 4. Heat exchanger thermistor disconnected (only in heating mode)
2 times	Outdoor unit forced operation	When the outdoor unit is in forced operation or balancing operation after forced operation. 2. Electrical parts in the outdoor unit
3 times	Indoor/Outdoor unit interface defective	When the interface signal from the outdoor unit is interrupted. 1. Indoor interface circuit 2. Outdoor interface circuit
5 times	Abnormal rotating numbers of fan motor	When lower DC fan motor not running 1. DC Fan motor
8 times	Damper defective	1. Fan motor damper.
9 times	Fault at room thermistor or heat exchanger	When room thermistor or heat exchanger is opened circuit or short circuit 5. Room thermistor 6. Heat exchanger thermistor
10 times	Over current at DC fan motor	When over current is detected at the DC fan motor of the indoor unit 5. Fan motor locked 6. Indoor control P.W.B.
13 times	Data reading error	When data read from IC401 or IC402 is incorrect 5. IC401 6. IC402

NOTE:
If the interface circuit is faulty when power is supplied, the self-diagnosis display will not display.
Check the indoor unit F-cable if the indoor unit does not operate at all.

14.3.4 RAS-07G4, RAS-09G4, RAS-14G4, RAS-18G4, RAS-24G4

TIMER LAMP	DETAILS	MAIN CHECK POINT
2 times	Outdoor unit forced operation	When the outdoor unit is in forced operation or balancing operation after forced operation. 1. Electrical parts in the outdoor unit
10 times	Over current at DC fan motor	When over current is detected at the DC fan motor of the indoor unit 1. Fan motor locked 2. Indoor control P.W.B.
13 times	Data reading error	When data read from IC401 or IC402 is incorrect 1. IC401 2. IC402
14 times	Heat exchanger thermistor error	Heat exchanger thermistor opened or shorted circuit 1. Thermistor 2. Indoor control circuit board
15 times	Room thermistor error	Room temperature thermistor opened or shorted circuit 1. Thermistor 2. Indoor control circuit board

NOTE:
If the interface circuit is faulty when power is supplied, the self-diagnosis display will not display.
Check the indoor unit F-cable if the indoor unit does not operate at all.

14.3.5 RAS-07GH4, RAS-09GH4, RAS-14GH4, RAS-18GH4, RAS-24GH4

TIMER LAMP	DETAILS	MAIN CHECK POINT
1 time	Reversing valve defective	When indoor heat exchanger temperature is too low in heating mode, or it is too high in the cooling mode 1. Reversing valve defect 2. Heat exchanger thermistor disconnected (only in heating mode)
2 times	Outdoor unit forced operation	When the outdoor unit is in forced operation or balancing operation after forced operation. 1. Electrical parts in the outdoor unit
10 times	Over current at DC fan motor	When over current is detected at the DC fan motor of the indoor unit 1. Fan motor locked 2. Indoor control P.W.B.
13 times	Data reading error	When data read from IC401 or IC402 is incorrect 1. IC401 2. IC402
14 times	Heat exchanger thermistor error	Heat exchanger thermistor opened or shorted circuit 1. Thermistor 2. Indoor control circuit board
15 times	Room thermistor error	Room temperature thermistor opened or shorted circuit 1. Thermistor 2. Indoor control circuit board

NOTE:
If the interface circuit is faulty when power is supplied, the self-diagnosis display will not display.
Check the indoor unit F-cable if the indoor unit does not operate at all.

14.3.6 RAS-18YH5, RAS-25YH5, RAS-35YH5, RAS-50YH5, RAS-60YH5, RAS-70YH5, RAS-80YH5

TIMER LAMP	DETAILS	MAIN CHECK POINT
1 time	Reversing valve defective	When indoor heat exchanger temperature is too low in heating mode, or it is too high in the cooling mode 1. Reversing valve defect 2. Heat exchanger thermistor disconnected (only in heating mode)
2 times	Outdoor unit forced operation	When the outdoor unit is in forced operation or balancing operation after forced operation. 1. Electrical parts in the outdoor unit
3 times	Indoor/Outdoor unit interface defective	When the interface signal from the outdoor unit is interrupted. 1. Indoor interface circuit 2. Outdoor interface circuit
4 times	Outdoor electrical assembly defective	Please check at the outdoor electrical led lamp blinking (LD 301) and refer to self diagnosis lighting mode for outdoor unit
9 times	Fault at room thermistor or heat exchanger	When room thermistor or heat exchanger is opened circuit or short circuit 1. Room thermistor 2. Heat exchanger thermistor
10 times	Over current at DC fan motor	When over current is detected at the DC fan motor of the indoor unit 1. Fan motor locked 2. Indoor control P.W.B.
13 times	Data reading error	When data read from IC401 or IC402 is incorrect 1. IC401 2. IC402

NOTE:
If the interface circuit is faulty when power is supplied, the self-diagnosis display will not display.
Check the indoor unit F-cable if the indoor unit does not operate at all.

14.3.7 RAC-25NH5, RAC-35NH5, RAC-50NH5, RAC-65NH5

LD301	LD302	LD303	SELF DIAGNOSIS NAME	DETAIL	MAIN CHECK POINT
			1. DURING OPERATION		
□	□	▨	Normal operation	Compressor operation	Not malfunction
▨	□	▨	Overload (1)	The rotation speed is automatically controlled to protect the compressor in the overload condition.	This shows an overload but not malfunction.
□	▨	▨	Overload (2)		
▨	▨	▨	Overload (3)		
			2. DURING STOP		
□	□	□	Normal stop	Indoor thermostat off, Main operation off.	Not malfunction
▨ 1 time	□	□	Reset stop	When stop with power reset.	P.W.B.
▨ 2 times	□	□	Peak current cut	Current overload	1. Compressor 2. P.W.B. 3. System power module
▨ 3 times	□	□	Abnormal low speed rotation	Position detection signal is not input during operation	1. System power module 2. Compressor 3. P.W.B.
▨ 4 times	□	□	Switching failure	Switching from low frequency sync start to position detection operation failure	1. System power module 2. Compressor 3. P.W.B.
▨ 5 times	□	□	Overload lower limit cut	Under the lower limit of rotation speed with overload control operated.	1. Outdoor is exposed to direct sunlight or airflow is block. 2. Fan motor/fan motor circuit 3. Voltage is abnormal low.
▨ 6 times	□	□	OH thermistor temperature rise	OH thermistor operated	1. Leak of refrigerant. 2. Compressor 3. OH thermistor circuit. 4. Fan motor/fan motor circuit.
▨ *7 times*	□	□	Abnormal thermistor	Thermistor is opened or shorted	1. Thermistor. 2. Connection of thermistor. 3. Thermistor circuit.
▨ 8 times	□	□	Acceleration defective	No acceleration over the lower limit of the rotation speed.	4. Leak of refrigerant. 5. Compressor.
▨ 9 times	□	□	Communication error	Communication between indoor and outdoor is interrupted	1. C, D cable reversed installation. 2. Cable disconnected. 3. Interface circuit of indoor/outdoor unit.
▨ 10 times	□	□	Abnormal power voltage	Power voltage is abnormal low.	4. Power voltage. 5. Reactor connection.
▨ 12 times	□	□	Fan defective	Outdoor fan rotation is abnormal	1. Outdoor fan motor 2. Fan motor circuit. 3. P.W.B. (fuse)
▨ 13 times	□	□	EEPROM read error	Microcomputer cannot read the data in EEPROM.	Main P.W.B.
▨ 14 times	□	□	Active converter defect	Over voltage detected at system power module	1. System power module.

14.3.8 RAC-18YH5, RAC-25YH5, RAC-35YH5, RAC-50YH5, RAC-60YH5, RAC-70YH5, RAC-80YH5

LD301	LD302	LD303	SELF DIAGNOSIS NAME	DETAIL	MAIN CHECK POINT
			3. DURING OPERATION		
□	□	▨	Normal operation	Compressor operation	Not malfunction
▨	□	▨	Overload (1)	The rotation speed is automatically controlled to protect the compressor in the overload condition.	This shows an overload but not malfunction.
□	▨	▨	Overload (2)		
▨	▨	▨	Overload (3)		
			4. DURING STOP		
□	□	□	Normal stop	Indoor thermostat off, Main operation off.	Not malfunction
▨ 1 time	□	□	Reset stop	When stop with power reset.	P.W.B.
▨ 2 times	□	□	Peak current cut	Current overload	4. Compressor 5. P.W.B. 6. System power module
▨ 3 times	□	□	Abnormal low speed rotation	Position detection signal is not input during operation	4. System power module 5. Compressor 6. P.W.B.
▨ 4 times	□	□	Switching failure	Switching from low frequency sync start to position detection operation failure	4. System power module 5. Compressor 6. P.W.B.
▨ 5 times	□	□	Overload lower limit cut	Under the lower limit of rotation speed with overload control operated.	4. Outdoor is exposed to direct sunlight or airflow is block. 5. Fan motor/fan motor circuit 6. Voltage is abnormal low.
▨ 6 times	□	□	OH thermistor temperature rise	OH thermistor operated	5. Leak of refrigerant. 6. Compressor 7. OH thermistor circuit. 8. Fan motor/fan motor circuit.
▨ *7 times*	□	□	Abnormal thermistor	Thermistor is opened or shorted	6. Thermistor. 7. Connection of thermistor. 8. Thermistor circuit.
▨ 8 times	□	□	Acceleration defective	No acceleration over the lower limit of the rotation speed.	9. Leak of refrigerant. 10. Compressor.
▨ 9 times	□	□	Communication error	Communication between indoor and outdoor is interrupted	6. C, D cable reversed installation. 7. Cable disconnected. 8. Interface circuit of indoor/outdoor unit.
▨ 10 times	□	□	Abnormal power voltage	Power voltage is abnormal low.	9. Power voltage. 10. Reactor connection.
▨ 12 times	□	□	Fan defective	Outdoor fan rotation is abnormal	4. Outdoor fan motor 5. Fan motor circuit. 6. P.W.B. (fuse)
▨ 13 times	□	□	EEPROM read error	Microcomputer cannot read the data in EEPROM.	Main P.W.B.

14.3.9 RAM-40QH5, RAM-55QH5, RAM 65QH5 , RAM-72QH5 , RAM-80QH5

LD301	LD302	LD303	LD304	SELF DIAGNOSIS NAME	DETAIL	MAIN CHECK POINT
RED	RED	RED	GRN	5. DURING OPERATION		
□	□	▨	□	Normal operation	Compressor operation	Not malfunction
▨	□	▨	□	Overload (1)	The rotation speed is automatically controlled to protect the compressor in the overload condition.	This shows an overload but not malfunction.
□	▨	▨	□	Overload (2)		
▨	▨	▨	□	Overload (3)		
				6. DURING STOP		
□	□	□	□	Normal stop	Indoor thermostat off, Main operation off.	Not malfunction
▨ 1 time	□	□	□	Reset stop	When stop with power reset.	P.W.B.
▨ 2 times	□	□	□	Peak current cut	Current overload	7. Compressor 8. P.W.B.
▨ 2 times	▨	□	□	Peak current cut	Current overload	1. System power module (SPM) 2. P.W.B.
▨ 3 times	□	□	□	Abnormal low speed rotation	Position detection signal is not input during operation	7. System power module (SPM) 8. Compressor 9. P.W.B.
▨ 4 times	□	□	□	Switching failure	Switching from low frequency sync start to position detection operation failure	7. System power module (SPM) 8. Compressor 9. P.W.B.
▨ 5 times	□	□	□	Overload lower limit cut	Under the lower limit of rotation speed with overload control operated.	7. Outdoor is exposed to direct sunlight or airflow is block. 8. Fan motor/fan motor circuit 9. Voltage is abnormal low.
▨ 6 times	□	□	□	OH thermistor temperature rise	OH thermistor operated	9. Leak of refrigerant. 10. Compressor 11. OH thermistor circuit. 12. Fan motor/fan motor circuit.
▨ 8 times	□	□	□	Acceleration defective	No acceleration over the lower limit of the rotation speed.	11. Leak of refrigerant. 12. Compressor.
▨ 10 times	□	□	□	Abnormal power voltage	Power voltage is abnormal low.	11. Power voltage. 12. Reactor connection.
▨ 12 times	□	□	□	Fan defective	Outdoor fan rotation is abnormal	7. Outdoor fan motor 8. P.W.B. (fuse)
▨ 13 times	□	□	□	EEPROM read error	Microcomputer cannot read the data in EEPROM.	Main P.W.B.

LD301	LD302	LD303	LD304	SELF DIAGNOSIS NAME	DETAIL	MAIN CHECK POINT
RED	RED	RED	GRN	2. DURING STOP (cont.)		
14 times				Active converter defective	Over voltage is detected by system power module.	System power module (SPM)
Lit	*1~9*			Thermistor abnormal	Thermistor is open or shorted. Refer to the following correspondence table for abnormal thermistor.	1. Thermistor. 2. Connection defective on thermistor. 3. Thermistor circuit.
			1 time	Communication error between outdoor unit and indoor unit.	Communication error of indoor 1.	1. Cable is wrongly connected. 2. Cable is open. 3. Interface circuit between indoor unit and outdoor unit.
			2 times		Communication error of indoor 2.	
			* *3 times*		Communication error of indoor 3.	

Blinking times	Abnormal thermistor
1 time	Overheat thermistor
2 times	Defrost thermistor
3 times	Outdoor temperature thermistor
4 times	Narrow pipe thermistor (indoor 1)
5 times	Wide pipe thermistor (indoor 1)
6 times	Narrow pipe thermistor (indoor 2)
7 times	Wide pipe thermistor (indoor 2)
8 times *	Narrow pipe thermistor (indoor 3)
9 times *	Wide pipe thermistor (indoor 3)

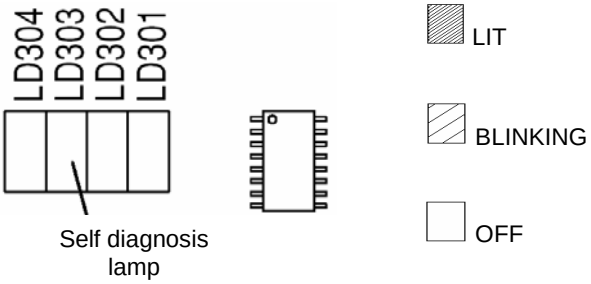

Remark:
Starmark "*" is only use for RAM 65QH5
For more information, please refer to section 13.3

14.4 THERMISTOR

14.4.1 NAME AND ROLE OF EACH THERMISTOR

Name	Connector no.	Measuring point	role
OH thermistor	CN5	Compressor head	If the temperature of the compressor rises abnormally (118°C), the compressor will be stopped. The temperature is used to decide the operation of the valve
DEF thermistor	CN6	Heat exchanger	The thermistor decide the defrost operation during heating combine the data of the outside temperature and its data
Outdoor temperature thermistor	CN7	Outside temperature	Outdoor temperature is used to decide the various operation of the air conditioner
Electrical Expansion valve thermistor (narrow pipe 1)	CN8	Indoor unit (narrow pipe 1)	The thermistors detect the temperature of the piping to the indoor units. The temperature are used to decide how much the expansion valve is opened
Electrical Expansion valve thermistor (narrow pipe 2)		Indoor unit (narrow pipe 2)	
Electrical Expansion valve thermistor (narrow pipe 3) *		Indoor unit (narrow pipe 3)	
Electrical Expansion valve thermistor (narrow pipe 4) *		Indoor unit (narrow pipe 4)	
Electrical Expansion valve thermistor (wide pipe 1)	CN9	Indoor unit (wide pipe 1)	
Electrical Expansion valve thermistor (wide pipe 2)		Indoor unit (wide pipe 2)	
Electrical Expansion valve thermistor (wide pipe 3) *		Indoor unit (wide pipe 3)	
Electrical Expansion valve thermistor (wide pipe 4) *		Indoor unit (wide pipe 4)	

"*" Starmark is applicable to respective models only

14.4.2 REFERENCE VALUE FOR THERMISTOR'S RESISTANCE AND TEMPERATURE

Electrical expansion valve thermistor	Temperature	Resistance	Microcomputer pin potential
DEF thermistor	-15°C	12.6kΩ	1.0V
	0°C	6.1 kΩ	1.7V
	25°C	2.2 kΩ	3.0V
	50 °C	860 Ω	3.9V
	75°C	400 Ω	4.4V
Outdoor temperature thermistor	-15°C	12.6kΩ	1.0V
	0°C	6.1 kΩ	1.7V
	15°C	3.2 kΩ	2.4V
	30 °C	2 kΩ	3.1V
OH thermistor	25 °C	33.9 kΩ	0.5V
	50 °C	10.8 kΩ	1.3V
	75 °C	4.1 kΩ	2.4V
	100 °C	1.7 kΩ	3.4V
	105 °C	1.5 kΩ	3.6V
	118 °C	1 kΩ	3.9V

NOTE:
The table shows the corresponding reference value between thermistor's resistance and the temperature. The value stated in the table might be slightly differ from measured value, depending on the measuring instrument.

When measuring the resistance, pull out the connector after turning off the power supply to avoid voltage leak.

WARNING:
Pulling out the connector while the power supply is turn on will cause electrical shock, leak of current or burn of measuring instrument.

14.4.3 THERMISTOR RESISTANCE-TEMPERATURE GRAPH

RAM-40QH5, RAM-55QH5, RAM-65QH5 , RAM-72QH5

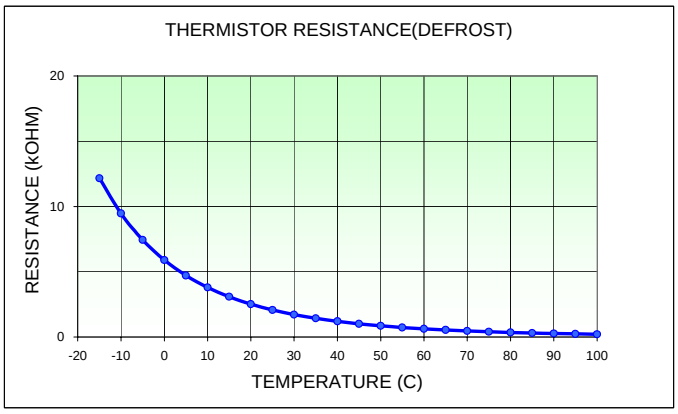

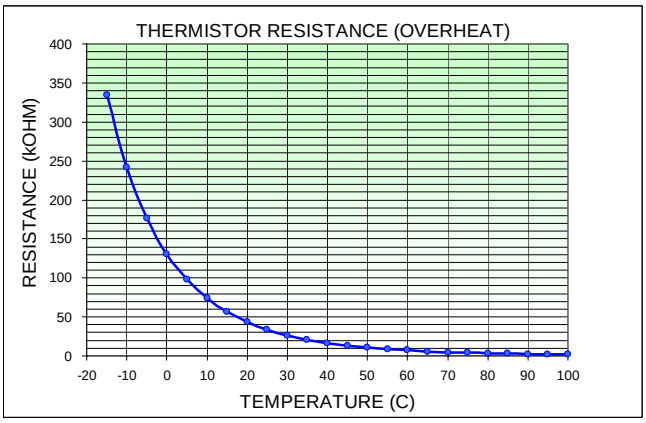

RAM-80QH5

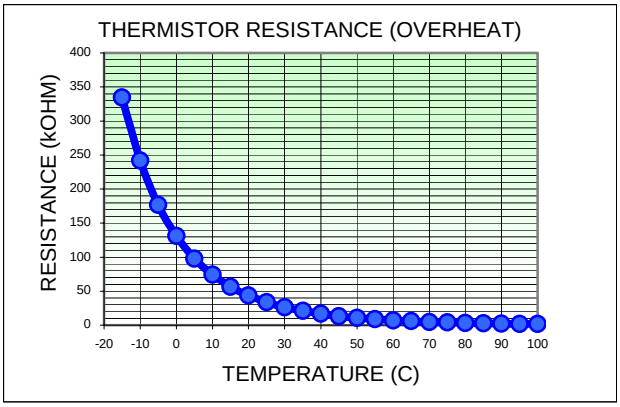

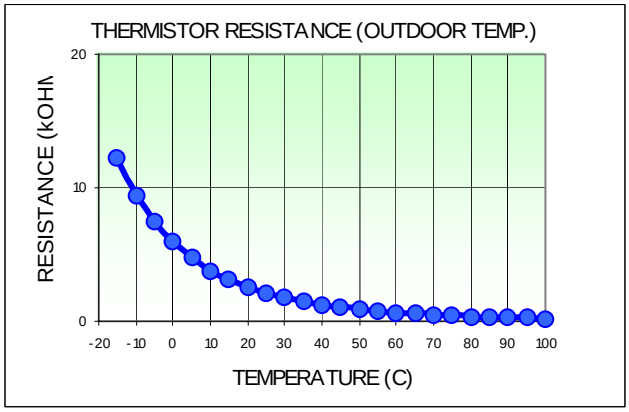

1. When the connectors of the thermistors are disconnected or the thermistors are open or short, LD301 (red) will lights and LD302 (red) blinks so that they indicate troubled parts (please refer to section 12.1).

WARNING:
Beware that an open-circuit for OH thermistor has to be checked in 5 minutes after the compressor starts.

2. *If the unit operates abnormally after replacing the thermistor, the control P.W.B. must be replace.*

RAS-25YH5, RAS-35YH5

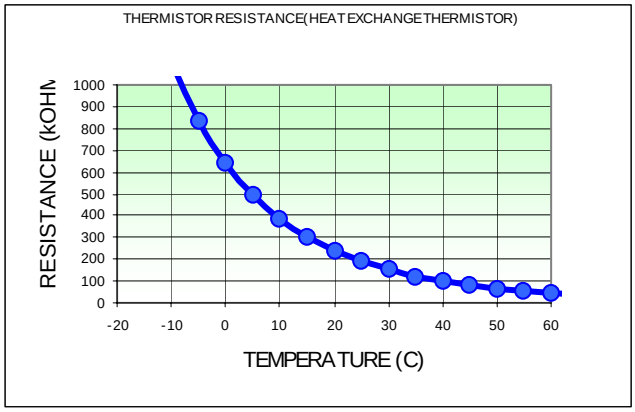

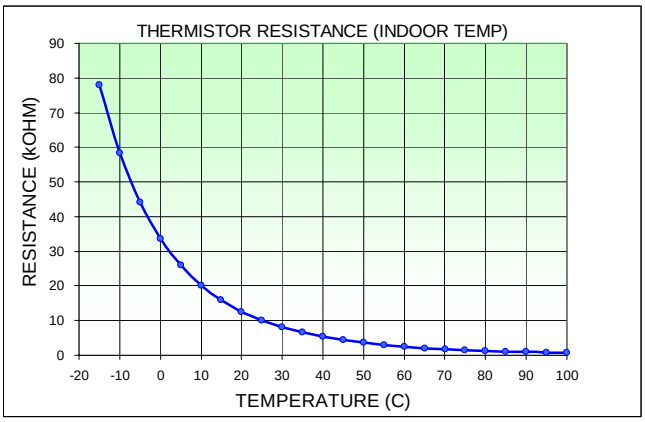

RAS-50YH5, RAS-60YH5, RAS-70YH5, RAS-80YH5

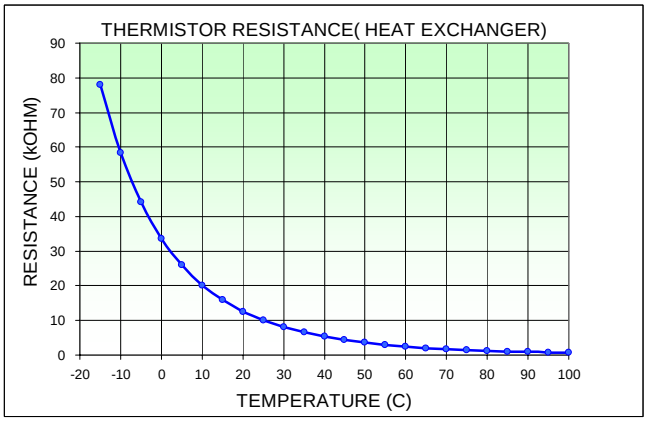

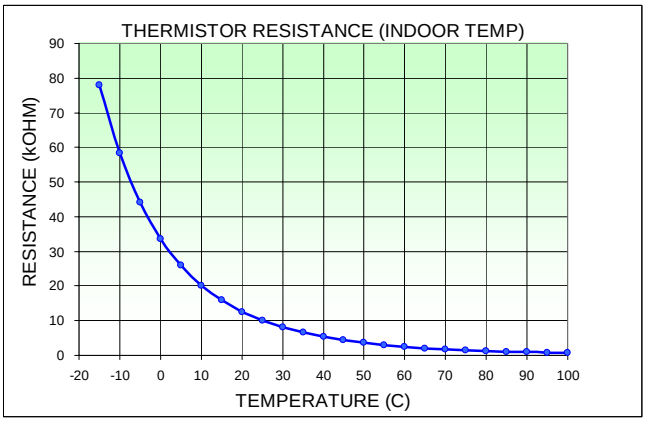

RAS-07G4/GH4 , RAS-09G4/GH4 , RAS-14G4/GH4, RAS-18G4/GH4, RAS-24G4/GH4

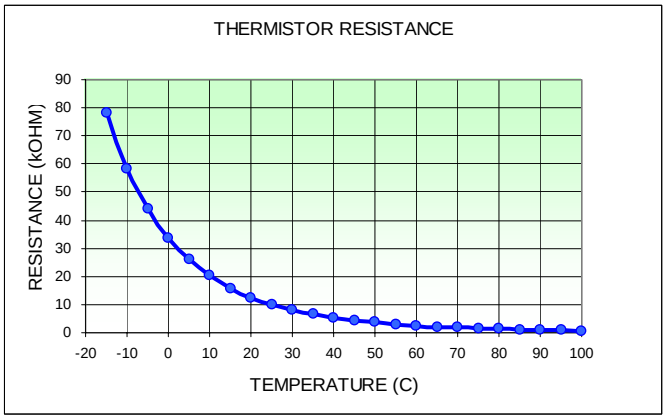

(HEAT EXCHANGER)

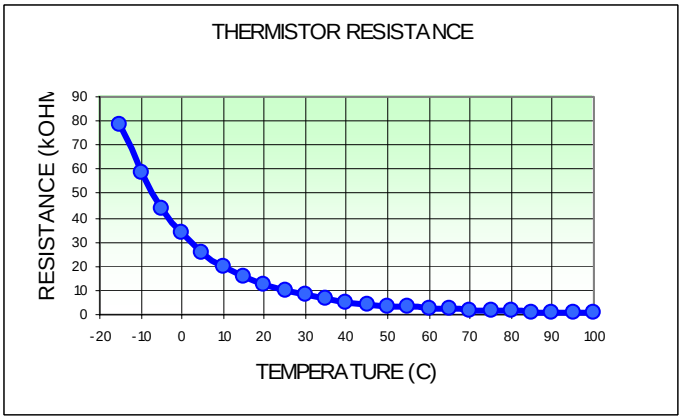

(INDOOR TEMP)

LED lighting mode		Troubled thermistor	Judgement	
LD301	LD302		Open	Short
light	1 blink	OH thermistor	0.04V or less	4.96V or more
Light	2 blinks	DEF thermistor	0.04V or less	4.94V or more
Light	3 blinks	Outdoor temperature thermistor		
Light	4 blinks	Electrical expansion valve thermistor (thin pipe 1)		
Light	5 blinks	Electrical expansion valve thermistor (thick pipe 1)		
Light	6 blinks	Electrical expansion valve thermistor (thin pipe 2)		
Light	7 blinks	Electrical expansion valve thermistor (thick pipe 2)		
Light	8 blinks	Electrical expansion valve thermistor (thin pipe 3)	0.04 or less	4.94 or more
Light	9 blinks	Electrical expansion valve thermistor (thick pipe 3)		

15 MISCELLANEOUS NOTE

CONTENTS

15 MISCELLANEOUS NOTE 15-1
15.1. Miscellaneous Notes 15-2
15.1.1. Installation in Snowy Area 15-2
15.1.2. Installation of hot pipe 15-2

15.1. MISCELLANEOUS NOTES

15.1.1. INSTALLATION IN SNOWY AREA

Caution:

1. Heating by the air conditioner takes the heat from the outside air and discharge into the room. Even if the air conditioner is a PAM system, it makes difficulty to warm or cannot warm the snow accumulate or cold seasonal winds blow.
2. When the outdoor unit is installed in cold regions, please take note that the installation shall be at places where are less influence of snow and seasonal winds.
3. For comfortable heating by the air conditioner, please install the outdoor unit at places where easy to collect heat.

Note:

- No responsibility is accepted for ant form of use other than the designated applications.
- Heating and cooling capability may be slightly affected by the use of the hot pipe.
- Time taken to heat and cool may be slightly longer whe nthe hot pipe is used.

15.1.2. INSTALLATION OF HOT PIPE

1. Turn off the circuit breaker and remove the connecting cord.
2. Remove the attached pipes from the service valve.
3. Remove external parts as show in below figure.

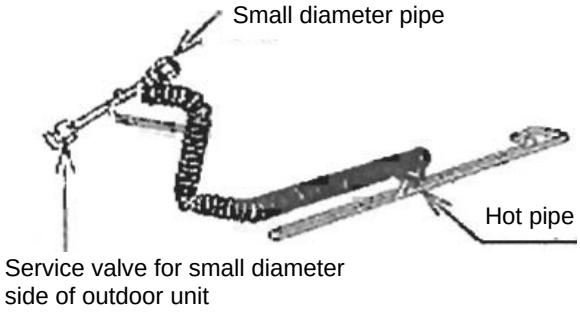

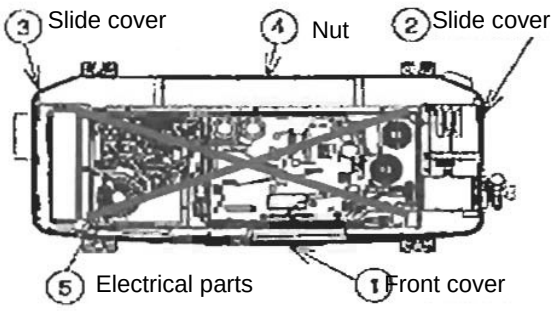

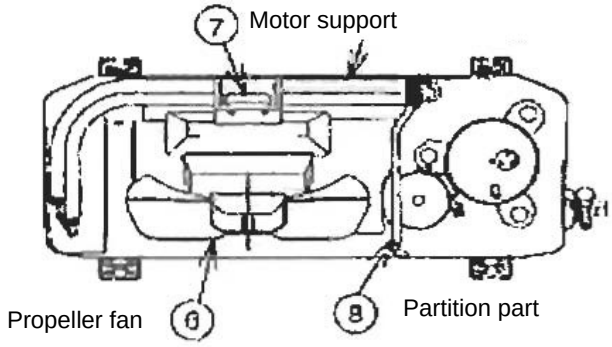

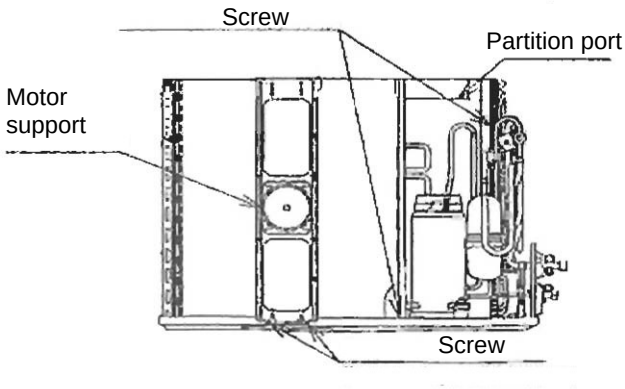

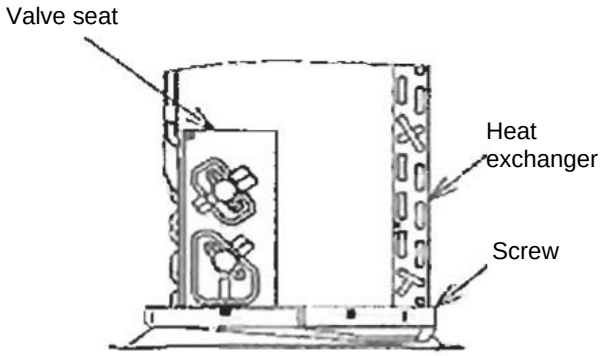

4. Remove the bushing that is attached to the base.
5. remove the securing screw of the heat exchanger.
6. Lift up the heat exchanger and create a gap of approximately 10mm between the base and the lower surface of the heat exchanger.

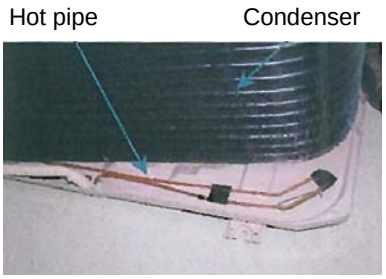

7. Insert the hot pipe into the top of the base from the gap.
8. Return the heat exchanger to the original position, and fasten the screws. Bend the hot pipe so that the flare nut is approximately 10cm from the service valve.
9. The net at the rear side will accelerate snow accumulation. The snow on the net may not defrost even by defrosting from the heat exchanger. Therefore, cutting the net and reassemble all removed parts in step 3.
10. Connect the pipes and the hot pipe between the smaller side service valve and the smaller pipe. Adjust the length of the smaller pipe by cutting off the excess.

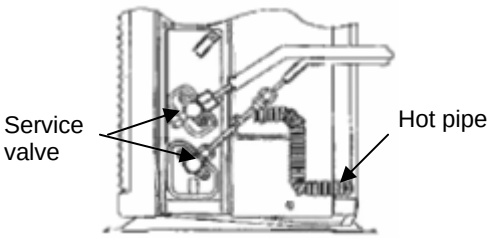

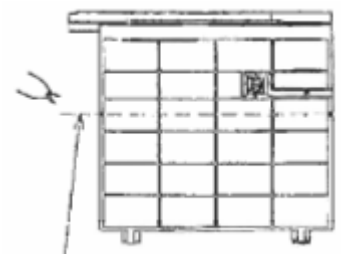

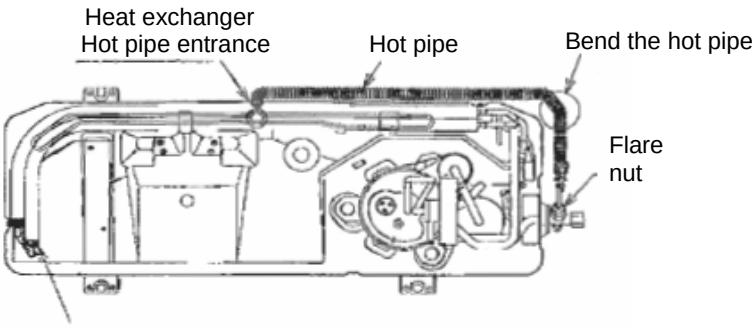

11. Connect the connecting cord to the terminal board.
12. Vacuum the air inside the system.
13. Check for gas leakage at the service valve.
14. Perform test to make sure the unit is operating correctly before reinstalling the unit.

Cut off and remove the lower part and leave the upper part

HITACHI

TCARG002_1-02/06