HITACHI
Inspire the Next

SET-FREE FSN(E)/ FXN(E)/FSVNE SERIES

Technical Catalog

Outdoor Units: 3 ~ 32 HP
Indoor Units Type:

- 4-Way Cassette
- 2-Way Cassette
- Ceiling
- In-the-Ceiling
- Wall
- Floor
- Floor Concealed

HITACHI
Inspire the Next

Specifications in this manual are subject to change without notice in order that HITACHI may bring the latest innovations to their customers.

Whilst every effort is made to ensure that all specifications are correct, printing errors are beyond Hitachi's control; Hitachi cannot be held responsible for these errors.

HITACHI
Inspire the Next

0. Contents

Benefits of SET-FREE 1

General Data 2

Dimensions Data 3

Capacities and Selection data 4

Working Range 5

Refrigerant Cycle 6

Piping and Refrigerant Charge 7

Electrical Data 8

Electrical Wiring 9

Remote Control Switches 10

Available Optional Functions 11

Troubleshooting 12

HITACHI
Inspire the Next

Contents

1. Benefits of SET-FREE 16
1.1. Benefits from the Selection Point of View 17
1.2. Benefits from the Point of View of the Installation 23
1.3. Benefits from the Startup Point of View 27
1.4. Benefits from the Point of View of Functionality 28
1.5. Benefits from the Point of View of Maintenance 30
1.6. Main Features of the Units 31

2. General Data 55
2.1. General Data for Indoor Units 56
2.2. RAS – General Data for Outdoor Units 65
2.3. Complementary Systems 70
2.4. Component Data for Indoor Units 72

3. Dimensions Data 81
3.1. Indoor Units 82
3.2. Outdoor Units 99
3.3. Complementary Units 106
3.4. Accessories 108

4. Capacities and Selection Data 112
4.1. Set-Free System Selection Procedure 112
4.2. KPI System Selection Procedure 116
4.3. Econofresh System Selection Procedure 119
4.4. Nominal Cooling Capacity of the Outdoor Units 120
4.5 Nominal Heating Capacity of the Outdoor Units 123
4.6. Correction Factors 126
4.7. Sensible Heat Factor (SHF) 149
4.8. Fan Performance 150
4.9. Temperature Distribution Diagrams 154
4.10. Sound Data 160
4.11. Foundation Provision 182
4.12. Center of Gravity 183

5. Working Range 188
5.1. Power Supply 188

6. Refrigerant Cycle 189
6.1. FSN(E) Units 190
6.2. FXN(E) Units 198
6.3. FSVNE Units 204
6.4. Accessories - CH Units 206

HITACHI
Inspire the Next

Contents (Cont.)

7. Piping and Refrigerant Charge 207
7.1. Refrigerant Piping Selection 208
7.2. Multikits and Distributors 219
7.3. Refrigerant Charging Quantity 230
7.4. Caution on Refrigerant Leakage 245

8. Electrical Data 247
8.1. Indoor Units 248
8.2. Complementary System – KPI 249
8.3. Outdoor Units 249

9. Electrical Wiring 251
9.1. General Check 252
9.2. Setting and Function of DIP Switches for Outdoor Units 253
9.3. Setting and Function of DIP Switches for Indoor Units 255
9.4. Setting of DIP Switches for Complementary Systems and Accessories 256
9.5. Common Wiring 257
9.6. Wiring Size 259
9.7. H-LINK System 261
9.8. PSC-5HR 265

10. Remote Control Switches 267
10.1. Wall Remote Control (PC-P1HE) 268
10.2. Optional Remote Controller (PC-P5H) 273
10.3. PC-LH3A Wireless Remote Control Switch 274
10.4. Optional Wall 7-Day Timer (PSC-5T) 278
10.5. Optional Wall Central Station (PSC-5S) 283
10.6. Optional Accessories for RCS 290

11. Available Optional Functions 291
11.1. Indoor Units Available Optional Functions 292
11.2. Outdoor Units Available Optional Functions 293
11.3. Remote Controllers Available Optional Functions 294

12. Troubleshooting 297
12.1. Alarm Codes 298

◆ Units Code List

NOTE:

MODELS CODIFICATION	Please check, according to the model name, which is your air conditioner type and how it is abbreviated and referred to in this technical catalogue.

FSN(1)(E) INDOOR UNITS									
4-way cassette		4-Way-Cassette Mini		2-way cassette		Ceiling		In-The-Ceiling	
Indoor	Indication Code	Indoor	Indication Code	Indoor	Indication Code	Indoor	Indication Code	Indoor	Indication Code
								RPI–0.8FSN1E NEW	7E887302
RCI -1.0FSN1E	7E861619	RCIM-1.0FSN	60277887	RCD-1.0FSN	60277813			RPI-1.0FSN1E NEW	7E887303
RCI-1.5FSN1E	7E861619	RCIM-1.5FSN	60277889	RCD-1.5FSN	60277814	–	–	RPI-1.5FSN1E NEW	7E887304
RCI -2.0FSN1E	7E861621	RCIM-2.0FSN	60277890	RCD-2.0FSN	60277815	RPC-2.0FSNE	7E872055	RPI-2.0FSN1E NEW	7E882024
RCI-2.5FSN1E	7E861620			RCD-2.5FSN	60277816	RPC-2.5FSNE	7E872030	RPI-2.5FSN1E NEW	7E882025
RCI -3.0FSN1E	7E871770			RCD-3.0FSN	60277817	RPC-3.0FSNE	7E872058	RPI-3.0FSN1E NEW	7E882031
RCI-3.5FSN1E	7E871779			–	–	RPC-3.5FSNE	7E872057	RPI-3.5FSN1E NEW	7E882035
RCI -4.0FSN1E	7E871780			RCD-4.0FSN	60277818	RPC-4.0FSNE	7E872059	RPI-4.0FSN1E NEW	7E882032
RCI -5.0FSN1E	7E871790			RCD-5.0FSN	60277819	RPC-5.0FSNE	7E872060	RPI-5.0FSN1E NEW	7E882033
RCI -6.0FSN1E	7E871794			–	–	RPC-6.0FSNE	7E872061	RPI-6.0FSN1E NEW	7E882034
								RPI-8.0FSNE	70886723
								RPI-10.0FSNE	70886733
								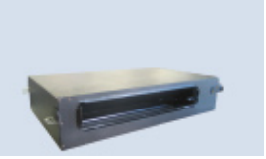	
RCI		RCIM		RCD		RPC		RPI	

RPI-3.0 FSN (1) (E)

- Unit Type (Indoor Unit) RCI(M) - RCD - RPC - RPI - RPK - RPF - RPF(I)
- Capacity (HP) 0.8-1.0-1.5-2.0-2.5-3.0-4.0-5.0-6.0-8.0-10.0
- H-Link Set-free/ System Free
- R410A Refrigerant
- Series
- E: Made in Europe -: Made in Japan

FSN(1)(E/M) INDOOR UNITS							
Wall		Wall Mini		Floor		Floor Concealed	
Indoor	Indication Code	Indoor	Indication Code	Indoor	Indication Code	Indoor	Indication Code
RPK-0.8FSNM	60277823						
RPK-1.0FSNM	60277824	RPK-1.0FSN1M	60277865	RPF-1.0FSNE	7E877715	RPFI-1.0FSNE	7E877719
RPK-1.5FSNM	60277825	RPK -1.5FSN1M	60277867	RPF-1.5FSNE	7E877716	RPFI-1.5FSNE	7E877720
RPK-2.0FSNM	60277826			RPF-2.0FSNE	7E877309	RPFI-2.0FSNE	7E877311
RPK-2.5FSNM	60277844			RPF-2.5FSNE	7E877310	RPFI-2.5FSNE	7E877312
RPK-3.0FSNM	60277845			-	-	-	-
RPK-3.5FSNM	60277846			-	-	-	-
RPK-4.0FSNM	60277847						
RPK		RPK (Mini)		RPF		RPFI	

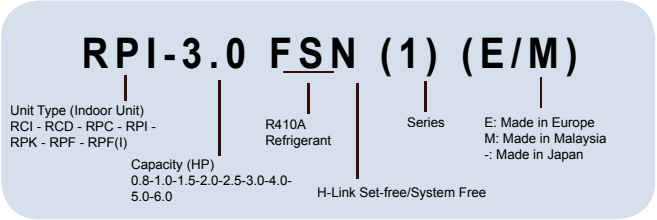

FSN(E) OUTDOOR UNITS				FXN(E) OUTDOOR UNITS			
Indoor	Indication Code	Indoor	Indication Code	Indoor	Indication Code	Indoor	Indication Code
RAS–5FSN	60278771	RAS-18FSN NEW	60278909			RAS–16FXN	60278841
RAS–8FSNE	7E878772	RAS–20FSN	60278775	RAS–8FXNE	7E878774	RAS–18FXN NEW	60278928
RAS–10FSNE	7E878773	RAS-22FSN NEW	60278910	RAS–10FXNE	7E878775	RAS–20FXN	60278821
RAS-12FSNE NEW	7E878776	RAS–24FSN	60278776	RAS–12FXNE NEW	7E878777	RAS–22FXN NEW	60278929
RAS-14FSN NEW	60278908	RAS-26FSN NEW	60278911			RAS–24FXN	60278842
RAS–16FSN	60278774	RAS–28FSN NEW	60278912			RAS–26FXN NEW	60278930
		RAS–30FSN	60278777			RAS–30FXN	60278822
		RAS-32FSN NEW	60278913			RAS–32FXN NEW	60278931

FSVNE OUTDOOR UNITS			
Indoor	Indication Code	Indoor	Indication Code
RAS–3FSVNE	7E878654		
		RAS–4FSVNE	7E878655
		RAS–5FSVNE	7E878656

RAS-5 FSN(E)/FXN(E)

- Unit Type (Outdoor Unit) RAS
- Compressor Power (HP) 5, 8, 10, 12, 14, 16, 18, 20, 22, 24, 26, 28, 30, 32
- Set-free system: 2 Pipes R410A Refrigerant
- E: Made in Europe -: Made in Japan
- Set-free system: 3 Pipes
- R410A Refrigerant
- E: Made in Europe -: Made in Japan

RAS-5 FSVNE

- Unit Type (Outdoor Unit) RAS
- Compressor Power (HP) 3,4,5
- Set-free system: 2 Pipes
- Single phase unit (1~)
- R410A Refrigerant
- E: Made in Europe

COMPLEMENTARY SYSTEMS

Accesory	Name	Indication Code	Figure
KPI-2521	Total heat exchanger	60277481	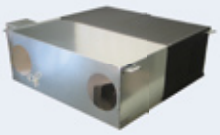
KPI-5021	Total heat exchanger	60277482	
KPI-8021	Total heat exchanger	60277483	
KPI-10021	Total heat exchanger	60277484	
EF-5GE	Econofresh Kit	7E774148	

ACCESSORIES CODE LIST

Accesory	Name	Indication Code	Figure
PC-P1HE	Remote control switch	7E799954	
PSC-5S	Central station	60291050	
PSC-5T	Seven-day timer	60291052	
PC-P5H	Optional Remote Controller	60290879	

Accesory	Name	Indication Code	Figure
PC-LH3A	Wireless Control Switch	60291056	
PC-RLH8	Receiver kit (for RCI-FSN1E –on the panel–)	60291106	
PC-RLH9	Receiver kit (for RCD –on the panel–)	60291107	
PC-RLH11	Receiver Kit (for RCI, RCD, RPC, RPI, RPK, RPF(I)–on the wall–)	60291109	
PC-RLH13 NEW	Receiver kit	60291294	**Image not available**
PSC-5HR	H-LINK relay	60291105	
PCC -1A	Optional Function Connector	60199286	
PRC-10E1	2P-Extension Cord	7E790211	
PRC-15E1	2P-Extension Cord	7E790212	
PRC-20E1	2P-Extension Cord	7E790213	
PRC-30E1	2P-Extension Cord	7E790214	
THM-R2AE	Remote Sensor (THM4)	7E799907	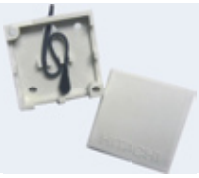
HARC-BXE (A)	Lonwork BMS Interface (7 inputs up to 6 units)	60290874	
HARC-BXE (B)	Lonwork BMS Interface (4 inputs up to 32 units)	60290875	
CS-NET (HARC-40E)	CS-NET + Interface	6E191922	
DBS-26	Drain Discharging Boss	60299192	

Accesory	Name	Indication Code	Figure
P-G23WA2	Air Panel for RCI	60291056	
P-N23WAM	Air Panel for RCIM	60197160	
P-G23DWA1	Air Panel for RCD	60291106	
P-G46DWA1	Air Panel for RCD	60291109	
B-23H4	Adopter for deodorant filter	60199790	
F-23L4-K	Anti bacteria filter	60199791	
F-23L4-D	Deodorant filter	60199793	
F-46L4-D	Deodorant filter	60199794	
PDF-23C3	Duct connection flange	60199795	
PDF-46C3	Duct connection flange	60199796	
OACI-232	Fresh air intake kit	60199797	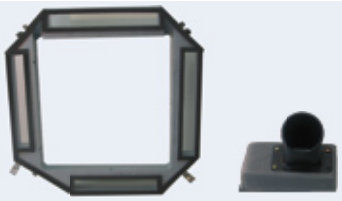
PD-75	Fresh air intake kit	60199798	
PI-23LS5	3 Way outlet parts	60199799	
TKCI-232	T duct connecting kit	60199801	
CH-4.0NE	CH-Box	7E890278	
CH-8.0NE	CH-Box	7E890197	
CH-12.0N	CH-Box	60291260	

Accesory	Name	Indication Code	Figure
E-102SN	Branch pipe	60291202	
E-162SN	Branch pipe	60291201	
E-242SN	Branch pipe	60291200	
E-302SN	Branch pipe	60291199	
E-52XN	Branch pipe	60291266	
E-102XN	Branch pipe	60291267	
E-162XN	Branch pipe	60291268	
E-202XN	Branch pipe	60291269	
E-242XN	Branch pipe	60291270	
E-322XN	Branch pipe	60291271	
E-84HSN	Header	60291197	
E-108HSN	Header	60291198	

HITACHI
Inspire the Next

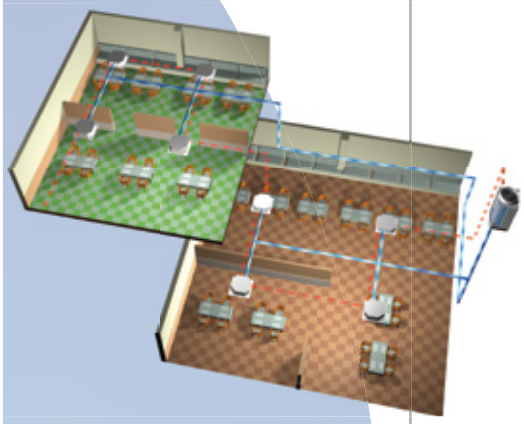

Introduction: Overview of the system

System Description

- The SET-FREE air-conditioning system incorporates a set of technical benefits that make it one of the most attractive on the market.
- Right from the selection of the ideal type of equipment in each case, up to its maintenance, and through installation, start up and operation. Hi Multi Set Free always provides the best solution for every user. Set Free largely simplifies and eases the user's selection process.
- HITACHI offers the same type of indoor units, the so-called SYSTEM FREE system. This system, which was developed entirely by HITACHI, lets the users design systems without having to think about what type of indoor units they need; thanks to this, installers and distributors do not have to duplicate indoor unit references.

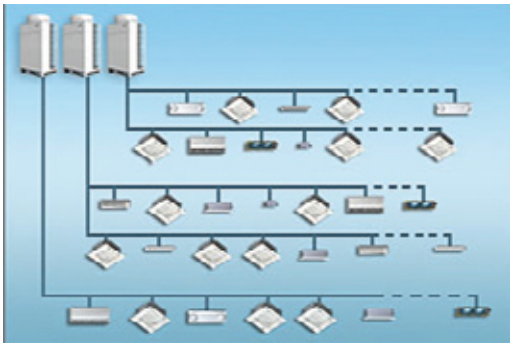

Increase of the SET FREE FSN(E)/FXN(E)/FSVNE Series

- The increase of the FSN(E) y FXN(E) series allows a new range of installation possibilities which provide greater flexibility and optimization of the system. The new indoor and outdoor units being presented are the following:

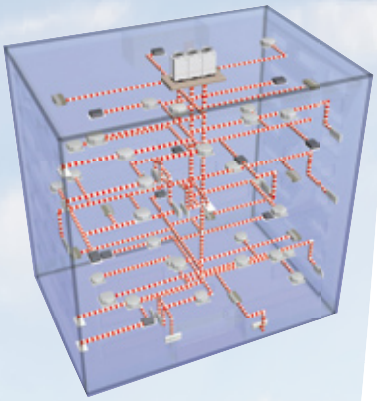

- New FSN(E) units with the following power: 12,14,18,22,26,28,32 HP.
- New FXN(E) units with the following power: 12,18,22,26,32 HP.
- New RCIM-FSN, 600X600 mm cassette.
- New RPI, much more silent.

HITACHI
Inspire the Next

This chapter describes the features and benefits of the new SET-FREE FSN(E)/FXN(E)/FSVNE series outdoor unit, which through its system flexibility and modularity will provide you with the complete solution for your air conditioning requirements.

Contents

1. Benefits of SET-FREE 16

1.1. Benefits from the Selection Point of View 17

1.1.1. Environment Friendly 17
1.1.2. A Wide Range of Choice 18
1.1.3. Complete Range of Remote Control Switches 20
1.1.4. Adaptability to the Customer's Needs 22
1.1.5. Availability of Software Selection 22

1.2. Benefits from the Point of View of the Installation 23

1.2.1. Compact Size 23
1.2.2. Easy and Flexible Piping Installation 23
1.2.3. Easy and Flexible Electrical Installation 26
1.2.4. Easy and Flexible Connection of Controls (Central Station, BMS Interface, CS-NET) 27
1.2.5. Flexible adaptation to the installation site 27

1.3. Benefits from the Startup Point of View 27

1.3.1. Automatic Startup Test 27
1.3.2. Service Check 28

1.4. Benefits from the Point of View of Functionality 28

1.4.1. Designed for Maximum Comfort 28
1.4.2. High Efficiency System 28
1.4.3. New Temperature Range 29
1.4.4. Silent Compressor 29
1.4.5. Silent Fan 29

1.5. Benefits from the Point of View of Maintenance 30

1.5.1. High Reliability 30
1.5.2. Designed for Easy Maintenance 30
1.5.3. Availability of Maintenance Tools 30

1.6. Main Features of the Units 31

1.6.1. Indoor Units 31
1.6.2. Outdoor Units 42
1.6.3. Complementary Systems 51

HITACHI
Inspire the Next

1. Benefits of SET-FREE

☛ Selection Benefits:

1.1. Benefits from the Selection Point of View

The new Hitachi System Free (SET-FREE) units bring a series of technical benefits that make them more attractive to the user. These benefits are described in detail below:

1.1.1. Environment Friendly

- **Uses R410A refrigerant**

  Hitachi Set Free units are environment friendly since they use R410A refrigerant.

  R410 is totally ecological since it does not contain any substances that are harmful to the ozone layer, ODP=0.

- **Highly efficient**

  Hitachi SET-FREE units are very efficient and allow important energy savings compared to conventional systems; these energy savings also mean that less CO2, which causes the greenhouse effect, is produced.

HITACHI
Inspire the Next

☛ Selection Benefits:

1.1.2. A Wide Range of Choice

◆ **Wide range of outdoor units**

The range of the new FSN(E)/FXN(E)/FSVNE(E) outdoor unit series has been increased to 28 models, letting you choose units from 3~32HP.

Outdoor Units			Capacity (HP)															
			3	4	5	8	10	12	14	16	18	20	22	24	26	28	30	32
Set Free Mini	FSVNE		●															
				●	●													
Set Free	FSN(E)				●													
						●	●	●										
									●	●								
											●	●	●					
														●	●	●	●	●
	FXN(E)					●	●	●										
										●								
											●	●	●					
														●	●		●	●

Selection Benefits:

- Fixed capacity unit
- Unit with a capacity that can be adapted to a higher range by modifying the DIP switch.
- Unit with a capacity that can be adapted to a lower range by modifying the DIP switch.
- Unit with a capacity that can be adapted to a higher or lower range by modifying the DIP switch.
- Available capacity from the configuration of a unit with adaptable capacity.

NOTE:

If you wish to obtain additional information please refer to the Chapter on Electrical Wiring.

FSN or FXN

SET-FREE lets you choose from a wide range of machines that fit the needs of every user. You can choose outdoor units that go from 3 to 32 HP in the FSN(E) series, and from 8~32 HP for the FXN(E), 3 tube system, that allows a totally stand alone operation of the indoor units, independently of whether some of these operate in refrigeration and others in heating mode.

Wide range of indoor units

The range of the new System-Free indoor unit series has been increased to 56 models, classified in 7 different types, in order to adapt to the requirements of difference buildings, and to solve any installation problem.

A flexible combination

The capacity of the Hi-Multi Set Free system can be changed depending on the specific requirements of each installation. System Free indoor units can reduce or increase their capacity by simply using a DIP switch, which allows to “redesign” an installation without having to modify it.

HITACHI
Inspire the Next

☛ Selection Benefits:

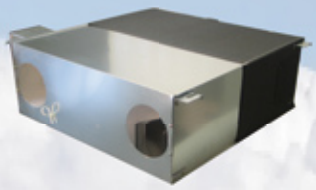

KPI:

RCS-PC-P1HE

◈ **System Free System**

HITACHI has developed the SYSTEM FREE system with its customers always in mind. This system, which is unique in the world, allows the interconnection of the same indoor units for all the HITACHI systems.

Of this system provides the end user with greater flexibility for installation, which means that the air-conditioning systems will integrate better with the whole of the installations that make up the building.

◈ **Main features of the Hitachi SET-FREE indoor units:**

- Silent
- Efficient
- Compact

All these features allow Hitachi to obtain a range of indoor units that can adapt to any installation, while always respecting the parameters of quality that their users need.

◆ **Complementary accessories and systems**

All the units have a large set of accessories that facilitate unit installation, operation and maintenance.

These accessories are designed to improve and adapte the unit to the type of installation the system needs, always keeping in mind the parameters of quality that the SET-FREE system requires.

The complementary systems have been designed as elements that are attached to the installation,and improve their performance in aspects of power consumption as well as in the quality of the conditioned air.

(See section 1.6.3 for additional information regarding Hitachi complementary systems)

1.1.3. Complete Range of Remote Control Switches

Hitachi has three different complementary systems that can be used with SET-FREE outdoor units.

Additionally, Hi-Multi SET-FREE is made up of different types of systems that let you control the units individually, collectively and even centrally; when controlled centrally, CS-Net software is used to, which allows to monitor and control air-conditioning installations with up to 1,024 indoor units.

On the other hand, Hitachi has interface equipment to integrate its machines in installations with intelligent control or BMS.

◆ **Individual Control Systems**

The individual controls available are the PC-P1HE Remote Control Switch, the PC-LH3A Wireless Remote Control Switch, and the PC-P5H Half Size Remote Control Switch.

◈ **PC-P1HE**

Remote Control Switch with the following features:

Large sized LCD Display

Adjustable timer with intervals from half an hour to 24 hours.

A self-diagnosis function is incorporated. When a problem occurs, an alarm code immediately shows the details of the error.

All the functions of the indoor unit can be selected through the remote control switch.

A thermostat function is incorporated.

☛ Selection Benefits:

PC-LH3A
Wireless Remote Control Switch

PC-P5H Remote control switch

Timer PSC-5T

Central Station PSC-5S

◈ **PC-LH3A**

A wireless remote control switch that removes the necessity of wiring and provides simple one-touch operation. It can control two or more units simultaneously.

◈ **PC-P5H**

Remote control switch that is smaller than the conventional one, and whose main function is temperature adjustment. It is ideal for facilities such as hotels, where different people use it, because it is easy to use.

Two remote control switches or a group control (for a maximum of 16 units) can be used. in a similar way to the standard remote control switch.

When a problem occurs, an alarm code immediately shows the details of the error.

◆ Timer

The PSC-5T is a seven-day programmable timer used to set operating schedules for air conditioners.

◈ **PSC-5T**

By using PSC-5S and PC-P1HE controllers. the air conditioners they control can be operated according to the following schedule.

The timer can be set at seven-day intervals. and operation/stop can be set three times daily.

The Remote Control Switch can be disabled during the OFF time (when used with PSC-5S and PC-P1HE).

Two types of weekly schedule (A and B) can be set. and can easily be changed for summer and winter operation.

Settings are all digitally displayed. allowing operations and settings to be easily checked.

The power failure backup function prevents the timer from stopping because of a power failure (even if it lasts for weeks).

◆ Centralized Control Systems

The centralized control systems available are the PSC-5S Central Station, the HARC- Gateway Interface to LONG-WORKS BMS Systems, and the CS-NET Computer Controlled Network System.

◈ **PSC-5S**

Central station

A group of up to 16 remote control switches can be connected to an H-LINK to control up to 128 indoor units.

Up to 8 units can be connected to an H-LINK.

In addition to the basic functions. the operation mode and temperature setting. air flow or auto louver can be set.

When a problem occurs, an alarm code immediately shows the details of the error detected.

An external input terminal is provided as standard.

External signals control the following functions:

- Central Operation/Stop
- Demand Control Emergency Stop
- Central Operation Output
- Central Alarm Output

☛ Selection Benefits:

CS-NET / CS-NET WEB
Control System

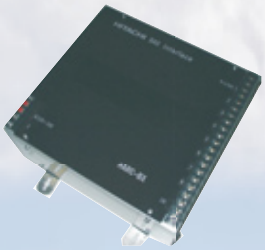

Lonwork BMS Interface

Software for selection
Hi-tool kit

◆ **CS-NET/ CS-NET WEB Control System**

HITACHI network system that is controlled by computer or by Internet via CS-NET Web.

HITACHI Cs-Net is a powerful and easy-to-use system for SET-FREE systems.

CS-NET provides the following functions:

- Limits the setting temperature range
- Locking of the different setting points
- Setting temperature
- Operation mode
- Fan step
- Run/Stop (only recommended for Computer Rooms)
- Up to 16 outdoor units to be controlled per H-LINK Board
- Up to 128 indoor units per H-LINK
- Communications with service partner
- The CS-NET system can be connected to any point in the H-Link System

◆ **Integration with installations with intelligent control (BMS)**

Gateway interface with LONG-WORKS BMS systems (installations with intelligent control or BMS).

By using HARC-BX allows control of up to 5 setting points and remote monitoring of up to 9 values. Connecting the HARC-BX to an H-LINK allows up to eight refrigerant cycles to be used and up to 64 indoor units can be controlled.

Up to 8 HARC-BX can be connected to the same H-Link

The HARC-BX can be connected to any point in the H-Link system.

1.1.4. Adaptability to the Customer's Needs

◆ **Large variety of options in the standard commands**

Flexibility is guaranteed when using SET-FREE, since its units have a large number of options in its standard commands. These options can be easily configured by means of a large variety of Hitachi remote-control switches, or through the PCBs of the indoor and outdoor units. This way, the installation can be customized according to the customer's needs.

◆ **Variable installation capacity**

Hitachi SET-FREE systems allows connecting indoor units of up to 130% of the total capacity of the outdoor unit. This allows to adapt to the requirements of each installation, according to the power that is required at each moment.

Thanks to this feature of the SET-FREE system, an installation can be expanded, taking into account that you can install indoor units with a capacity of up to 130% of the outdoor capacity.

1.1.5. Availability of Software Selection

◆ **HI-TOOL KIT**

Hitachi provides software that helps select the models according to the customers requirements easily. It provides different types of very useful information, such as, for example, the recommended number of units, or the lengths and diameters of the piping required.

Installation benefits:

1.2. Benefits from the Point of View of the Installation

As far as installation is concerned, SET-FREE systems provide the following benefits:

1.2.1. Compact Size

1

SET-FREE outdoor units need less installation space since they are the smallest and most compact units that can be found on the market.

The differences between installing a traditional machine (non inverter) and a SET-FREE machine (Example of RAS-10 FSNE) are shown below:

Model	Installed Power (Kw)	No. of Indoor Units connected	No. of Outdoor Units required for the installed power
Traditional Machine (Non inverter)	28	4	2
Increase	46%	400%	200%
Set-Free	41	16	1

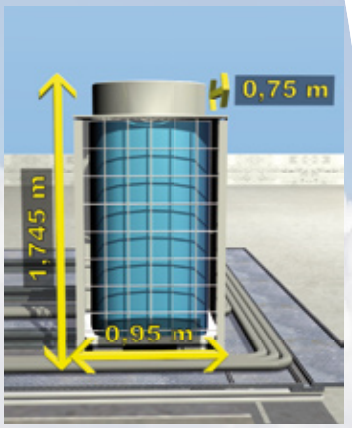

Compact Size

1.2.2. Easy and Flexible Piping Installation

HITACHI's SET-FREE installation system is one of the most flexible and easy systems on the market, allowing large cost savings at installation time and during subsequent maintenance.

- **Uni-Piping System (for FSN(E)/FSVNE only)**

Uni-Piping System, developed by Hitachi, it uses the same size of refrigerant piping throughout the installation, which enormously simplifies the whole process.

You can perform any installation with only two or three different pipe diameters, no matter how complex the installation is.

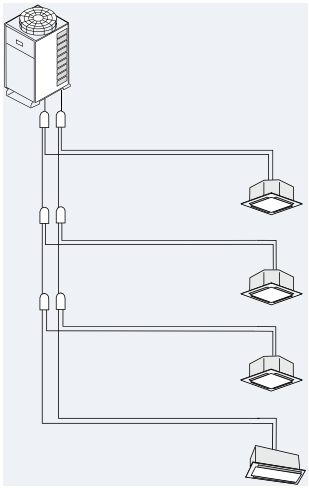

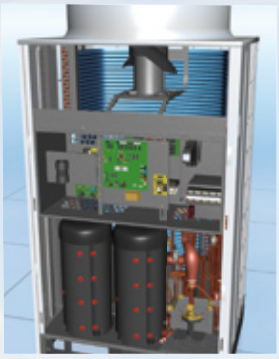

Uni-piping system

HITACHI
Inspire the Next

☛ Installation benefits:

◆ Integral Pipe System

In addition, Set Free uses an integral pipe system, which reduces the time and simplifies the installation of piping and cabling, and increases maintenance reliability. This system prevents having to place piping between outdoor units and accepts lengths of up to 150 m.

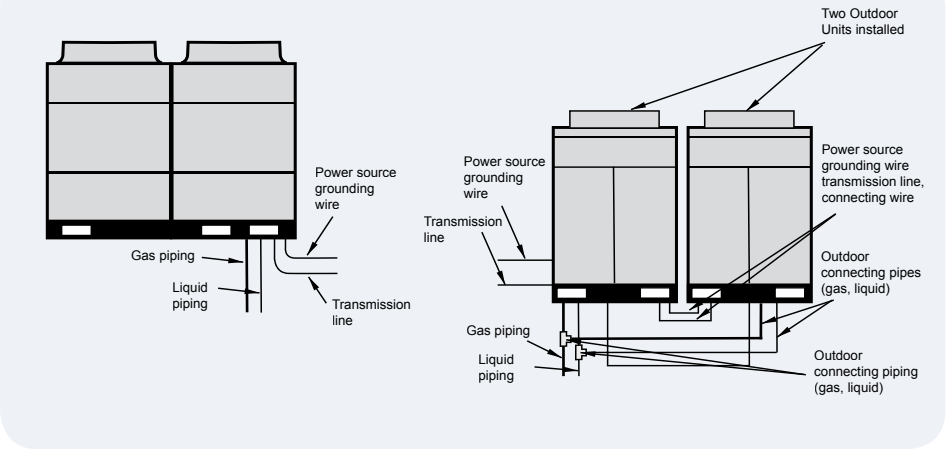

◆ Pipe Size Reduction

HP	Liquid Pipe		Gas pipe	
	R407C	R410A	R407C	R410A
3	∅9.53	∅9.53	∅15.88	∅15.88
4	∅9.53	∅9.53	∅19.05	∅15.88
5	∅9.53	∅9.53	∅19.05	∅15.88
6	∅9.53	∅9.53	∅19.05	∅15.88
8	∅12.70	∅9.53	∅22.20	∅19.05
10	∅12.70	∅9.53	∅25.40	∅22.20
12	-	∅12.70	-	∅25.40
14	-	∅12.70	-	∅25.40
16	∅15.88	∅12.70	∅28.60	∅28.60
18	-	∅15.88	-	∅28.60
20	∅19.05	∅15.88	∅34.90	∅28.60
22	-	∅15.88	-	∅28.60
24	∅19.05	∅15.88	∅34.90	∅28.60
26	-	∅19.05	-	∅31.75
28	-	∅19.05	-	∅31.75
30	∅22.20	∅19.05	∅41.30	∅31.75
32	-	∅19.05	-	∅31.75

The R410A refrigerant allows to reduce the assigned pipe sizes, as well as the refrigerant charge. The diameter of the piping can be less than with R407C refrigerant because refrigerant discharge is reduced, and loss of compression is therefore smaller for the same capacity as with R407C.

☛ Installation benefits:

☛ Example for RAS-10FSNE:

Additional Charge of Refrigerant

Additional refrigerant charge is largely reduced by refrigerant-Saving technology. The result of this technology used in the new Hi-Multi Set Free Series means it achieves an important reduction charge of 15 and 25%.

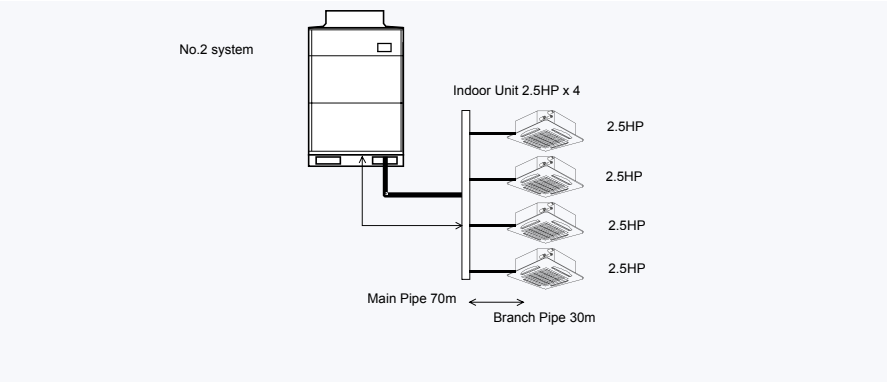

For FSN(E)	For FSG
Additional Refrigerant Charge for liquid piping	Additional Refrigerant Charge for liquid piping
∅9.53: (70 m + 30 m x 4) x 0.07 = 13.3 kg	∅9.53: 30 m x 4 x 0.065 = 7.8 kg
TOTAL = 13.3 Kg	∅12.7: 70 m x 0.120 = 8.4 kg
	TOTAL = 7.8 + 8.4 = 16.2 Kg
	The reduction of the charge is 18%

Up to 32 indoor units connected to one outdoor unit

Hitachi's Set Free system provides great flexibility, accepts different types of systems, and allows up to 32 indoor units, depending on the model of the outdoor unit. This system simplifies installation.

☛ Examples for RAS-10FSNE:

Mounting accessories, Multikits

Hitachi also provides all the accessories required for mounting piping, such as multikits and distributors. Hybrid installations can be applied between multikits and distributors, which makes the installation more flexible and greatly simplifies the problems that using a rigid system can create. (The first example of the previous section shows a hybrid installation)

NOTE:

For additional information concerning the types of multikits that Hitachi offers, refer to the chapter on "Piping and Refrigerant Charge".

HITACHI
Inspire the Next

☛ Installation benefits:

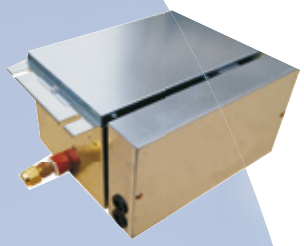

CH box

◆ **CH-BOX**

The HITACHI's Set Free FXN(E) System has a new CH-Box. The principal characteristic is the reduction in piping connections. These connections have been reduced from five (three in the outdoor unit and two in the indoor unit) to three (two in the outdoor unit and one in the indoor unit); and the lift (rise) between CH Units can be up to 15m. Also, the electrical box can be connected to any side of the unit. As a result of this new design, installation work has become much easier.

1.2.3. Easy and Flexible Electrical Installation

◆ **Unit interconnection via H-Link**

The units interconnect between themselves via a bus called H-LINK, which is made up of two non-polarity cables, and accepts lengths of up to 1,000 m. Accessories are available, if required, to increase this length to 5,000 m.

Example of H-LINK system:

◆ **Up to 128 indoor units connected to each circuit**

Each H-LINK bus can communicate up to 128 indoor units. Taking into account the absence of polarity and the length of line permitted, the flexibility of the interconnection between the machines is very high; this allows, for example, to connect the H-LINK of an indoor unit of a refrigeration system to the H-LINK of another indoor unit of another system.

☛ Example of H-LINK system:

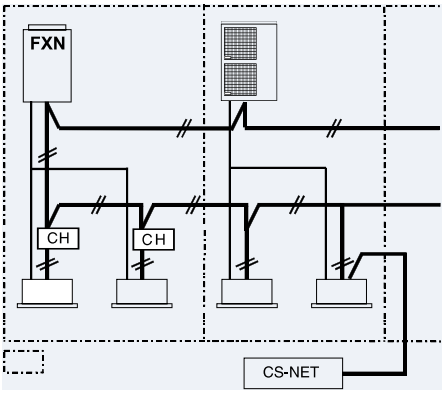

Specifications:	
Transmission cable:	2 – Wire
Polarity of Transmission cable:	Non-Polar Wire
Maximum Outdoor Units	16 Units per H-LINK System
Maximum Indoor Units	128 Units per H-LINK System
Maximum wiring length:	Total 1000m (including CS-NET)
Recommended Cable:	Shielded twisted pair cable or shielded pair cable, over 0.75 mm² (Equivalent to KPEV-S)
Voltage:	DC5V

NOTES:

When using the H-LINK system, the setting of DIP switches is required. If the DIP switches are not set or set incorrectly, an alarm may occur due to transmission failure. Total wiring length for the remote control switch can be extended to up to 5.000m. If total wiring length less than 30m, it is possible to use the normal wiring (0.3mm²).

The H-LINK system provides maximum flexibility for system design, the installation is easy, and the total costs are reduced. Furthermore, central control is possible by connecting CS-NET to H-LINK wiring located in the room next to the room where CS-NET is installed.

You can also control of installation by means of the Internet via CS-NET WEB.

☛ Installation benefits:

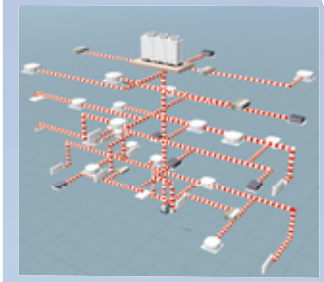

1.2.4. Easy and Flexible Connection of Controls (Central Station, BMS Interface, CS-NET)

◆ **No polarity**

Thanks to the absence of polarity, any centralized control can be connected directly to the H-LINK bus, which means that it is not necessary to use special lines.

◆ **Autoconfiguration**

Aside from the customized configuration, the control systems are also auto-configurable; for example, they have the capacity of interpreting the type of machine they are connected to, and detecting the type of indoor unit or its power.

1.2.5. Flexible Adaptation to the Installation Site

◆ **Adjustable capacity via DIP switch**

The combination of different types of indoor units, as well as their power, which can always be adjusted via a DIP switch in the PCB of the indoor unit, give the SET-FREE system the possibility of redesigning and readjusting an installation after it has already been installed. This flexible system allows installers and consultants to make changes subsequently.

1.3. Benefits from the Startup Point of View

As far as start up is concerned, SET-FREE systems provide the following benefits:

1.3.1. Automatic Startup Test

◆ **Test run**

Automatic Test Run is available for commissioning through outdoor unit DIP switch or indoor unit remote control switch. The outdoor unit 7-segment display gives all the necessary information to verify the correct operation of the system.

- Connected Outdoor Units Identification system:
  Using a Remote Control Switch. you can confirm to what series the operational Outdoor Units belong (ex: Single or Multi).
- Automatic Address Coding system:
  Able to automatically give a unit number to each indoor unit. (Units can also be allocated with a unit number manually, using their rotary type DIP switch).

◆ **Test run from the remote control switch**

- Auto-diagnostic

  A high quality control has been obtained with the new remote control switch, which includes the new self-diagnosis function that allows to quickly check the operation conditions of the indoor units and the outdoor unit. Furthermore, alarm data can be stored in a microcomputer memory when an abnormality occurs.

  The printed circuit boards (PCBs) of the remote control switch can be checked using the Liquid Crystal Display (LCD). Therefore, diagnosis for PCBs at the site is quickly and accurately performed.
- Data Memory in the Remote Control Switch

  If an abnormality occurs. the LCD remote control switch shows an alarm code so that quick diagnosis is available at the site.

☛ Startup Benefits:

HITACHI
Inspire the Next

☛ Startup Benefits:

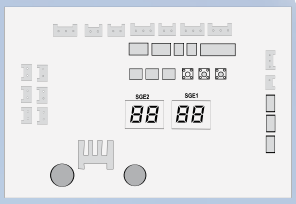

Example of PCB for FSN(E):

Hitachi Service Tools Software

☛ Functionality Benefits:

- Optional Function Setting by Remote Control Switch

  Cancellations of a four-degree shift in the heating mode or the fan speed increasing setting are set via Remote Control Switch.

  This way, multiple Indoor Units can be set at the same time. Also, the configuration can easily be changed, even after the installation has been completed.

◆ **Test Run Procedure from the Outdoor Unit**

The PCB in the outdoor unit is equipped with three 7-segment displays.
This display indicates various operating modes such as:

-Outdoor Temperature

-Discharge gas temperature

-Evaporating Temperature during Heating Operation

-Condensing Temperature

-Discharge pressure

-Compressor Run Time

Therefore. quick and accurate diagnose is available at the site during the trial operation or normal operation.

1.3.2. Service Check

◆ **Hitachi Service Tools**

Hitachi also has a powerful computer tool, the Hitachi Service Tools, a software that can be run from any laptop computer, which, by means of an interface that is connected to the H-LINK bus, retrieves all the data that is read from the different machines. This allows monitoring of this information in different formats, which means that problems that might occur during setup can be located rapidly.

1.4. Benefits from the Point of View of Functionality

1.4.1. Designed for Maximum Comfort

Hitachi's Set-Free technology materializes into very functional machines, that are designed to provide the maximum comfort possible to its users.

An example of this are the new technologies used in the Hi-Multi Set Free Series air conditioning systems:

1.4.2. High Efficiency System

◆ **Increase of the system's capacity**

SET-FREE systems are highly efficient, which is due to the following technical features:

- A more efficient heat exchanger.
- A supercooling circuit.

◆ **Reduced power consumption**

- Highly Efficient DC Scroll Compressor. Use of neodymium magnets in the rotor of the compressor motor.
- Use of the new inverter control.

Functionality Benefits:

◆ **High-level COP and EER**

As an example of this high level, the capacity operation power (COP) and the energy efficiency ratio (EER) for the RAS-8FSNE unit are shown.

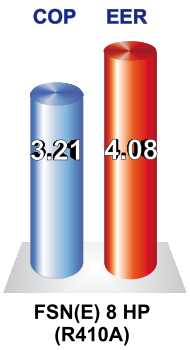

1.4.3. New Temperature Range

◆ **Range**

The optimization of the new refrigeration cycle implies an increase in the temperature range.

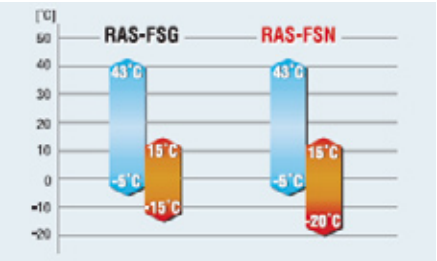

1.4.4. Silent Compressor

SET-FREE units have been designed with a compressor that optimizes to the maximum the noise level.

The combined use of scroll compressors and an insulation jacket, allow to reduce noise to unheard of levels.

The use of neodymium magnets in the rotor of the DC compressor improves the performance of the compressor at low frequencies, and an important reduction of electromagnetic noise has been obtained by separating the rotor into two parts.

Acoustically insulated compressor

1.4.5. Silent Fan

SET-FREE units have been designed with a fan that optimizes to the maximum the noise level.

The fan system has a revolutionary two blade Propeller, that is much more aerodynamic than the previous models, which provides an increase in contact surface with the air.

At the same time, the use of DC motors with PWM control, allow the system to be much more efficient and a reduction in electromagnetic noises.

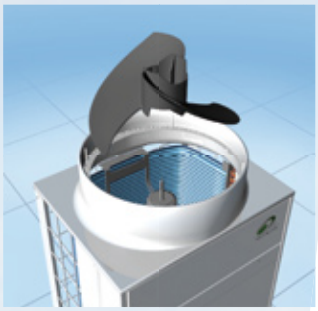

New, more silent fan

HITACHI
Inspire the Next

☛ Maintenance Benefits:

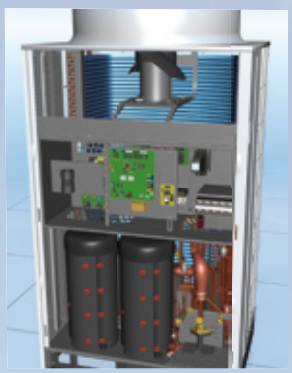

Easy accessibility

Alarms reception by means of PC-P1HE

CS-NET web as a service tool

1.5. Benefits from the Point of View of Maintenance

1.5.1. High Reliability

- **Minimizes maintenance**

  Faithful to Hitachi's usual philosophy, Set-Free units have been designed to guarantee great reliability and robustness in order to reduce to a maximum maintenance operations

1.5.2. Designed for Easy Maintenance

- **Easy accessibility**

  All SET-FREE systems' components are easily accessible. You can access all of theunit's components to perform appropriate operations through a simple cover. The entire system is designed for maintenance operations to be easy and simple.

- **39 alarm codes for easy maintenance**

  - These units use up to 39 very precise alarm codes in order to rapidly locate any problem that might occur.
  - These alarms are grouped by elements that belong to the system in order to facilitate maintenance work and optimize the installer's job.

- **Alarms information in the remote control switch through the PCB**

  - Alarm signals can be received through the remote control switches (whether they are individual or centralized), from the CS-Net/Cs-Net web software, or via the electric plate of the outdoor unit, thus facilitating maintenance work.

1.5.3. Availability of Maintenance Tools

All the benefits of the Hitachi Service Tools for setup are applicable to unit maintenance, either preventive or corrective, so that any problem will be detected and solved immediately.

CS-NET/CS-NET web software is also useful for maintenance operations.

Finally, as described in this chapter, Hitachi achieves that Hi-Multi Set-Free offers its users significant benefits and provides great quality, starting from machine selection and ending with its maintenance.

☛ Main features of the units:

☛ RCI:

1.6. Main Features of the Units

1.6.1. Indoor Units

This section describes the various indoor units that can be used with the new outdoor units of the series, and each one's main features.

◆ **RCI – 4-way cassette type**

The RCI 4-way cassette type indoor unit's main features are

◈ **Quiet operation**

- By employing a super-high-stream turbo fan (three-dimensional twisted wing with large bore and high efficiency), the wind flow efficiency has been improved by 20% (over conventional machines, patent pending). With the under damping slit mounted near the center of the revolving shaft, the electromagnetic noise is reduced. This electromagnetic noise is unique to DC motors and is caused by the number of magnetic poles and revolution speed of the motor.
- The following table lists air flow rates for the new RCI:

Model \ Air flow rate	Standard operation dB (A)		
	Hi	Med	Low
RCI-1.0FSN1E	32	30	28
RCI-1.5FSN1E	32	30	28
RCI-2.0FSN1E	32	30	28
RCI-2.5FSN1E	32	30	28
RCI-3.0FSN1E	34	32	30
RCI-3.5FSN1E	34	32	30
RCI-4.0FSN1E	38	35	33
RCI-5.0FSN1E	39	37	35
RCI-6.0FSN1E	42	40	36

◈ **Reduced electrical power consumption due to the use of the new DC motor**

- The DC fan motor greatly improves efficiency compared to conventional products that use AC motors. In addition. air blasts are reduced by controlling the rotation speed of the fan.
- The motor's electrical power consumption is reduced by employing a ferrite magnetic surface-mounted rotor, acentralized winding system and split core system. The motor efficiency is improved in all aspects, and is 50% smaller and lighter than conventional machines.

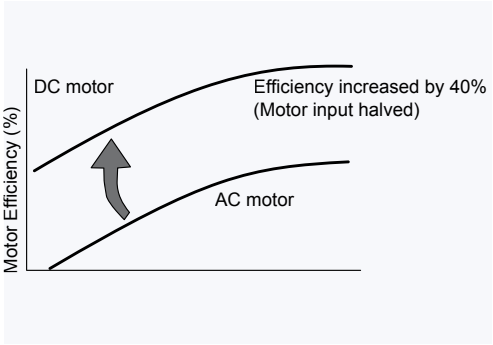

HITACHI
Inspire the Next

☛ Main features of the units:

☛ RCI:

◈ **Installation benefits**

- Compact, thin and can be installed in a small spaces.

The height of the units is just 298mm, one of the smallest on the market, and so they can be installed in a reduced space inside a false ceiling.

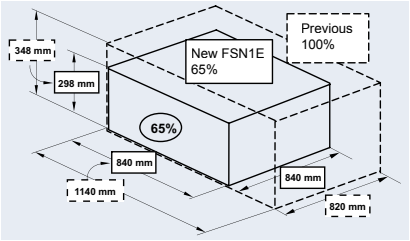

- High ceiling adaptability

This model has been adapted for high ceiling (4.2m high) installations by incorporating high speeds. This feature provides comfortable air conditioning in suburban stores and showrooms.

(m)

High ceiling	1.0/1.5/2.0/2.5 HP			3.0/3.5/4.0/5.0/6.0 HP		
	4-way	3-way	2-way	4-way	3-way	2-way
Std.	2.7	3.0	3.3	3.2	3.6	4.0
Speed-up (1)	3.0	3.3	3.5	3.6	4.0	4.2
Speed-up (2)	3.5	3.6	-	4.2	4.3	-

- Smaller ceiling opening for installation and renewall

The ceiling opening size has been changed from the conventional 910mm to a range between 860-910mm. so the ceiling panel cut-out will be smaller.

- Flexibility in the installation of piping

Improved piping flexibility because the unit-suspending positions are square-shaped.

The suspending bolt pitch size is 760mm, positioned at each corner of the unit. Thus, the direction of the unit can be changed easily to match the pipe connection without changing the bolt positions. The design is simple even for continuous installations.

By setting the refrigerant pipe and drain pipe at separate corners. the efficiency of the installation work has been improved.

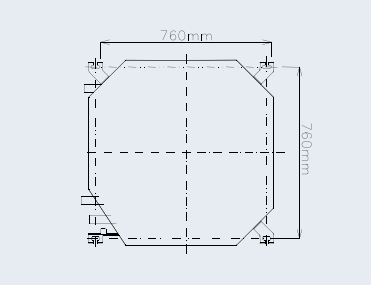

- Equipped with drain up mechanism with high pump lift

A drain pump lift of up to 850mm from the ceiling surface is achieved by employing a drain-up mechanism with high pump lift (500mm in the previous model).

☛ Main features of the units:

☛ RCI:

- Uniform square panel size

Panel sizes are standardized to a 950mm square to facilitate the simple interchange of other models with different capacities.

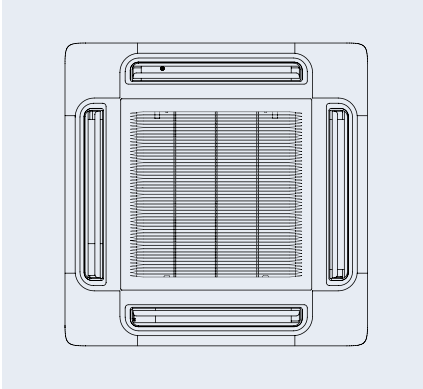

- Easily adjustable unit height in the corner pocket

A pocket is provided for each of the four panel corners, so that the body height can be easily adjusted without removing the panel.

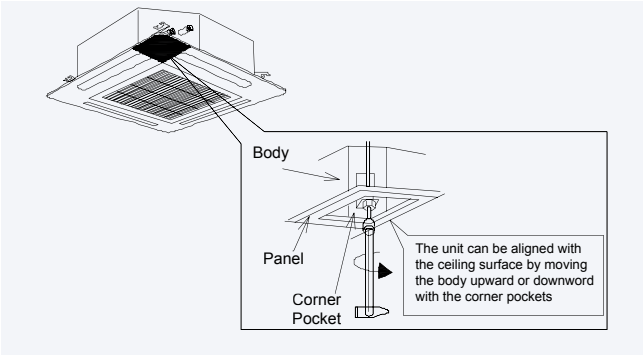

◆ **RCIM – 4-way mini cassette type**

☛ RCIM:

The RCIM 4-way mini cassette type indoor unit's main features are:

◈ **Quiet operation**

- By employing the DC motor the electromagnetic noise is reduced.
- The following table shows the different model's level of noise pressure.

Model \ Air flow rate	Standard operation dB (A)		
	Hi	Med	Low
RCIM-1.0FSN	36	34	32
RCIM-1.5FSN	38	35	33
RCIM-2.0FSN	42	39	37

☛ Main features of the units:

☛ RCIM:

◈ Reduced electrical power consumption due to the use of the new DC motor

- The DC fan motor greatly improves efficiency compared to conventional products that use AC motors. In addition. air blasts are reduced by controlling the rotation speed of the fan.
- The motor's electrical power consumption is reduced by employing a ferrite magnetic surface-mounted rotor, acentralized winding system and split core system. The motor efficiency is improved in all aspects, and is 50% smaller and lighter than conventional machines.

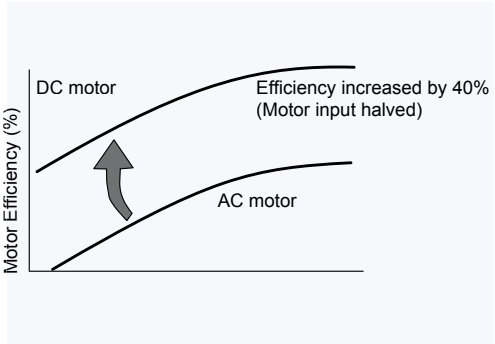

◈ Installation benefits

- High ceiling adaptability

  This model has been adapted to high ceiling installations (3.5 m)

(m)

High ceiling	1.0 HP	1.5HP	2.0HP
Std.	Below 2.5	Below 2.5	Below 2.7
Speed-up (1)	2.5 to 2.9	2.5 to 2.9	2.7 to 3.1
Speed-up (2)	2.9 to 3.9	2.9 to 3.9	3.1 to 3.5

- Flexibility in the installation of piping

Improved piping flexibility because the unit-suspending positions are square-shaped.

The suspending bolt pitch size is 760mm, positioned at each corner of the unit. Thus, the direction of the unit can be changed easily to match the pipe connection without changing the bolt positions. The design is simple even for continuous installations.

By setting the refrigerant pipe and drain pipe at separate corners. the efficiency of the installation work is improved.

By setting the refrigerant pipe and drain pipe at separate corners. the efficiency of the installation work is improved.

The water level automatically activates the pump when the draining process is required.

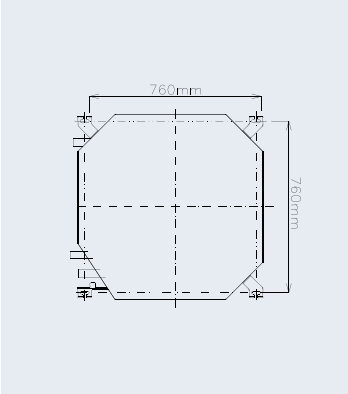

- Equipped with drain up mechanism with high pump lift

  A drain pump lift of up to 600 mm from the ground surface is achieved by employing a drain-up mechanism with high pump lift.

☛ Main features of the units:

☛ RCIM:

- Uniform square panel size

Panel sizes are standardized to 700 mm² to facilitate the installation in grid ceilings. The standard European module is 600 mm².

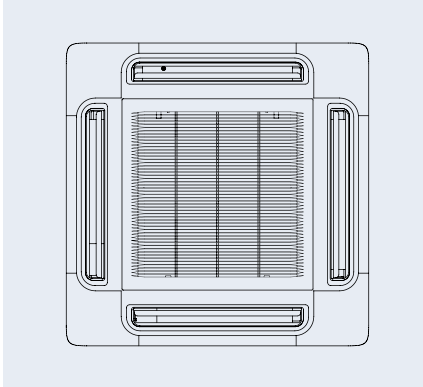

- Easily adjustable unit height in the corner pocket

A pocket is provided for each of the four panel corners, so that the body height can be easily adjusted without removing the panel.

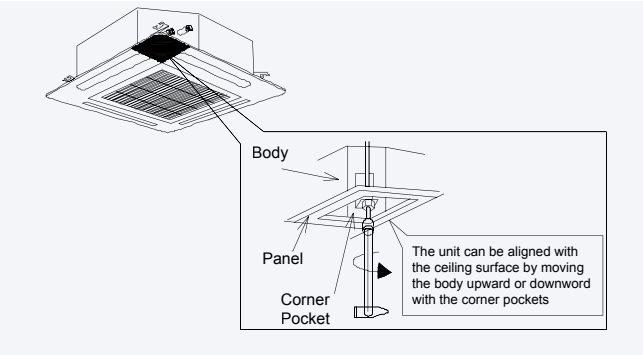

◆ RCD – 2-way cassette type

The RCD 2-way cassette type indoor unit's main features are.

☛ RCD:

◈ Quiet operation

- The following table shows the different model's level of noise pressure.

Model \ Air flow rate	Standard operation dB (A)		
	Hi	Med	Low
RCD-1.0FSN	34	32	30
RCD-1.5FSN	35	32	30
RCD-2.0FSN	35	32	30
RCD-2.5FSN	38	34	31
RCD-3.0FSN	40	36	33
RCD-4.0FSN	40	36	33
RCD-5.0FSN	43	40	36

- By using the multi-blade centrifugal fan, the noise level has been reduced to 30 dB(A), which is an improvement in the noise level with respect to previous models

HITACHI
Inspire the Next

☛ Main features of the units:

☛ RCD:

◈ Energy efficiency

- The DC fan motor greatly improves efficiency compared to conventional products that use AC motors. In addition. air blasts are reduced by controlling the rotation speed of the fan.
- The motor's electrical power consumption is reduced by employing a ferrite magnetic surface-mounted rotor, acentralized winding system and split core system. The motor efficiency is improved in all aspects, and is 50% smaller and lighter than conventional machines.

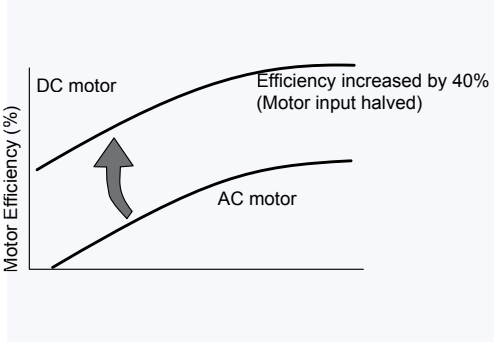

◈ Installation benefits

- Compact, thin and can be installed in a small space

A compact turbo fan simplifies the structure and reduces the height of the unit to 298 mm. The unit low profile design allows easy installation in confined space inside a ceiling.

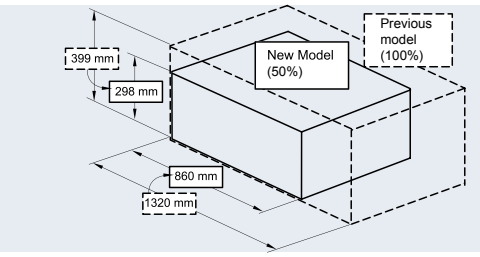

HITACHI
Inspire the Next

☛ Main features of the units:

☛ RPC:

1

◆ **RPC – ceiling type**

The RPC ceiling type indoor unit's main features are:

◈ **Profile design**

- The RPC units have a stylized aspect, which along with the new color, make them one of the most elegant units of this market segment
- The unit is equipped with an automatic swing louver to ensure even distribution of the air

◈ **Installation benefits**

- Versatile mounting

  To expand the installation and positioning options. HITACHI added a second drain pipe connector. one more than conventional units.

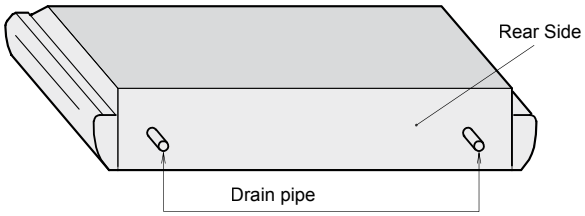

- Mounting brackets

  Adjustable mounting brackets, that allow installing a machine flush with the ceiling.

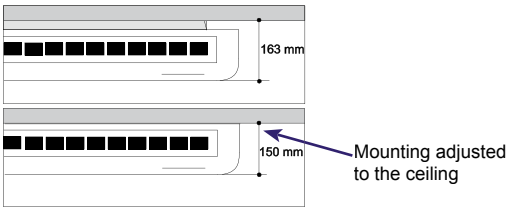

HITACHI
Inspire the Next

☛ Main features of the units:

☛ RPI:

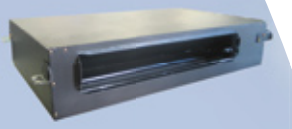

0.8~1.5HP

2.0~6.0HP

8.0~10.0HP

◆ RPI – In The_Ceiling Type

The RPI In-the-ceiling type indoor unit's main features are:

◈ Quiet operation

- A new fan unit which combines innovative design with the use of new materials, which results in important noise reductions, make Hitachi's RPI units some of the most silent on the market.

- The following table shows the different model's level of noise pressure.

Models	Sound level dB(A)	
	Hi	Lo
RPI-0.8	34	31
RPI-1.0	34	31
RPI-1.5	35	32
RPI-2.0	33	29
RPI-2.5	35	30
RPI-3.0	35	31
RPI-3.5	35	31
RPI-4.0	37	35
RPI-5.0	39	36
RPI-6.0	40	39

◈ Installation benefits

- Equipped with drain up mechanism with high pump lift

  A drain pump lift of up to 850mm from the ceiling surface is achieved by employing a drain-up mechanism with high pump lift (500mm in the previous model).

☛ Main features of the units:

☛ RPI:

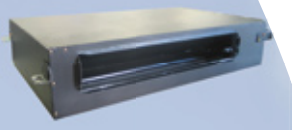

0.8~1.5HP

2.0~6.0HP

8.0~10.0HP

- Inlet air direction change.
  (RPI-2.0~6.0FSN1E only)

  The direction of the inlet air can be modified by changing the position back cover, as shown in the following diagram

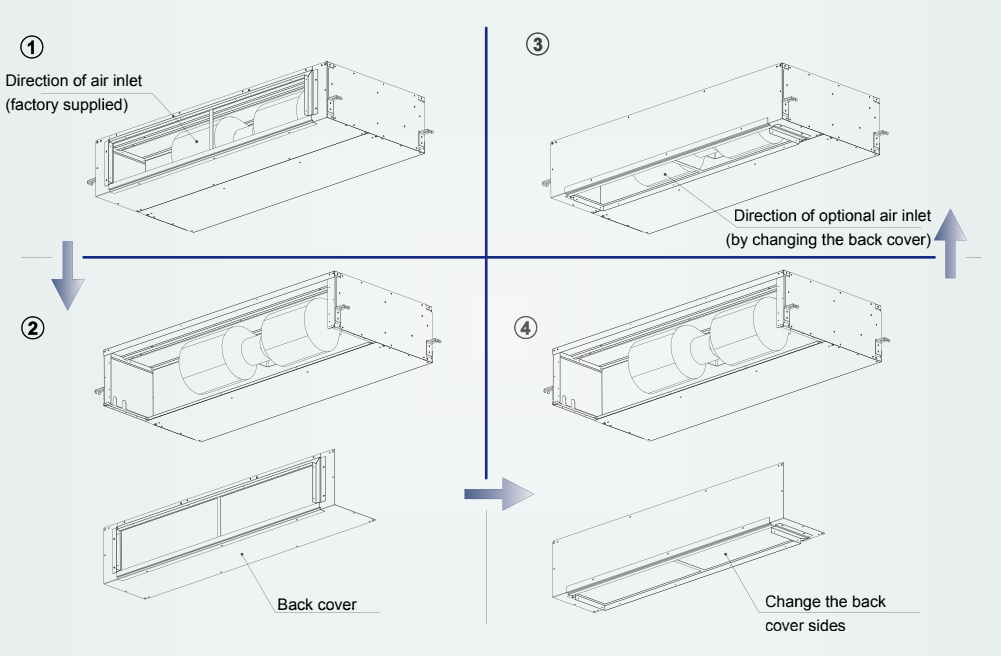

- Static pressure selection with the remote control switch.
  (New for RPI-0.8~1.5FSN1E)

  It is possible to select the static pressure by means of the remote control switch.

- Filter servicing. (RPI2.0~6.0FSN1E only)

  Filters servicing has been improved for the RPI-FSN1E. The filter is now accessed through the lower part of the unit.

  Service is performed by removing the three screws of the filter support, and by pulling the filter downward, as shown in the following diagram

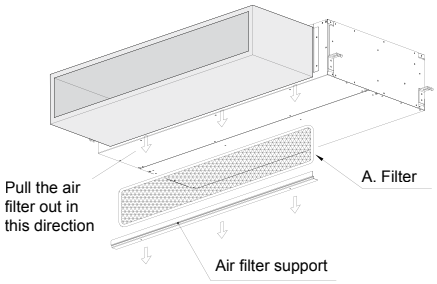

HITACHI
Inspire the Next

☛ Main features of the units:

☛ RPK FSN1M:

☛ RPK FSNM:

RPK (0.8~2.0HP)

RPK (2.5~4.0HP)

◆ RPK – FSN1M Wall type

The RPK-FSN1M wall type indoor unit's main features are:

◈ Compact design

- The RPK-FSNM unit is very compact and stylized, thus ensuring that important reduction in size (up to 17%) as compared to other units

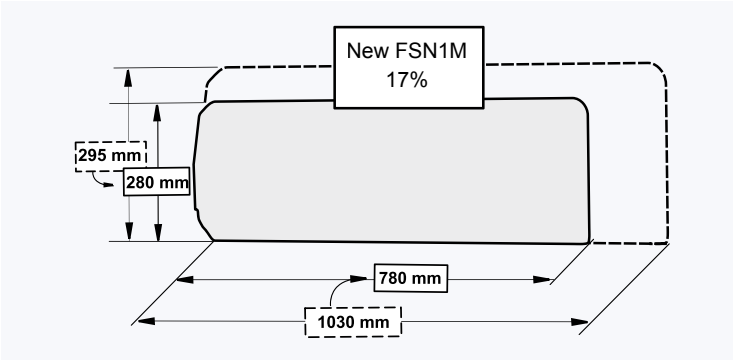

◈ Installation benefits

- Easy installation of the PC-P1HE.

  It is possible to connect the PC-P1HE to the terminal board without the optional cable.

◈ Maintenance work

- The alarm signals, when the PC-LH3A is used, are indicated in the "Filter" and "Timer" LEDs of the unit's casing.

◆ RPK – FSNM Wall type

The RPK-FSNM wall type indoor unit's main features are:

◈ Quiet operation

- The new conical body fan and trapezoidal blades create less air turbulence than the cylindrical fans, and make the air circulate optimally by reducing its resistance. These fans ensure a low noise level with high airflow.

Old model FSG2M	
Model	**Noise Level (dB)**
1.0HP	37-34-31
1.5HP	41-37-34
2/2.3HP	42-38-36

New model FSNM	
Model	**Noise Level (dB)**
0.8/1HP	36-34-31
1.5HP	39-37-34
2HP	40-38-36
2.5HP	43-40-37
3HP	43-40-37
3.5HP	49-46-43
4HP	49-46-43

- Trapezoidal blades (0.8~2.0HP)

◈ Design

- With its fine and elegant design, this unit will match any decor. Its compact size makes it easy to install because it's weight has been reduced by 15%.

HITACHI
Inspire the Next

1

☛ Main features of the units:

☛ RPF:

☛ RPFI:

◆ RPF – floor type

◈ Slim design of only 220 mm depth

- Due to its slim design. the indoor unit can be installed along the wall without wasting valuable floor space.

◈ Low height of only 630 mm

- The height of the indoor unit is only 630 mm so that this unit is ideal for perimeter zone air conditioning.

◈ Optional location for PC-P1HE (RPF)

- In the case of the RPF Unit, it is possible to install the PCP1HE under the plastic cover as shown in the figure below:

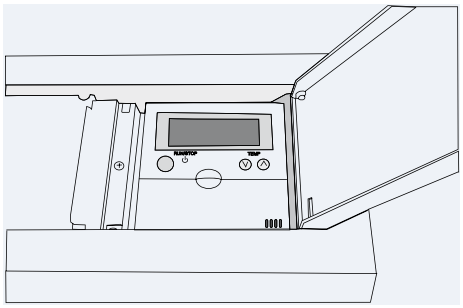

◆ RPFI – floor concealed type

◈ Compact design

- This unit is normally installed inside walls under windows, without changing the interior. Due to its compact design, 620 mm in height, 220 mm in depth and 863 mm for 1.0, 988 mm for 1.5 and 1238 mm for 2/2.5 in width, the unit can be installed in a limited space in most buildings.

◈ Air discharge direction change

- The alarm signals, when the PC-LH3A is used, are indicated in the “Filter” and “Timer” LEDs of the unit’s casing.

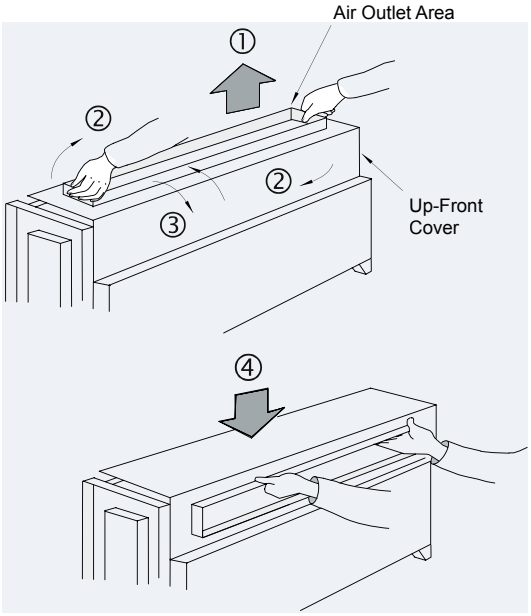

HITACHI
Inspire the Next

☛ Main features of the units:

☛ Circuit for FSN(E):

1.6.2. Outdoor Units

The SET-FREE systems are characterized by their great efficiency, thanks to all the technology applied.

◆ **Highly efficient**

◈ **High efficiency refrigerant cycle for FSN(E)/FXN(E)**

The new SET-FREE Series, provides increased efficiency in the refrigerant cycle. HITACHI has developed a new and more efficient heat exchanger and a new supercooling circuit.

- Heat exchanger more efficient

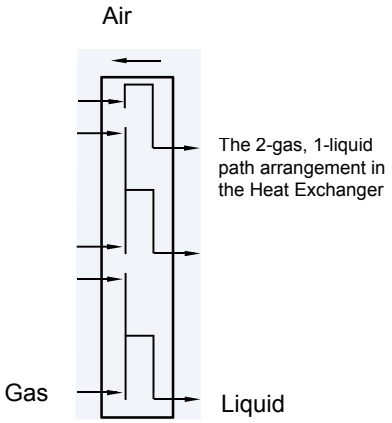

- Supercooling Circuit

The high efficiency plate type of heat exchanger improves performance.

FSN(E) circuit

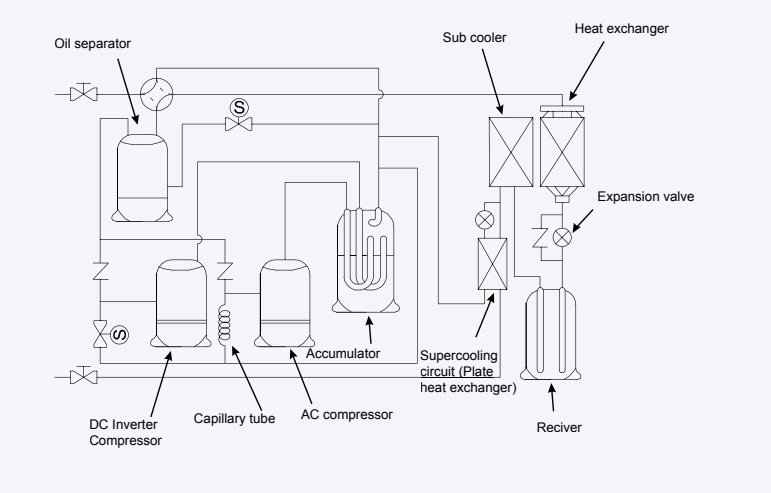

1

☛ Main features of the units:

☛ Circuit for FXN(E):

FXN(E) circuit

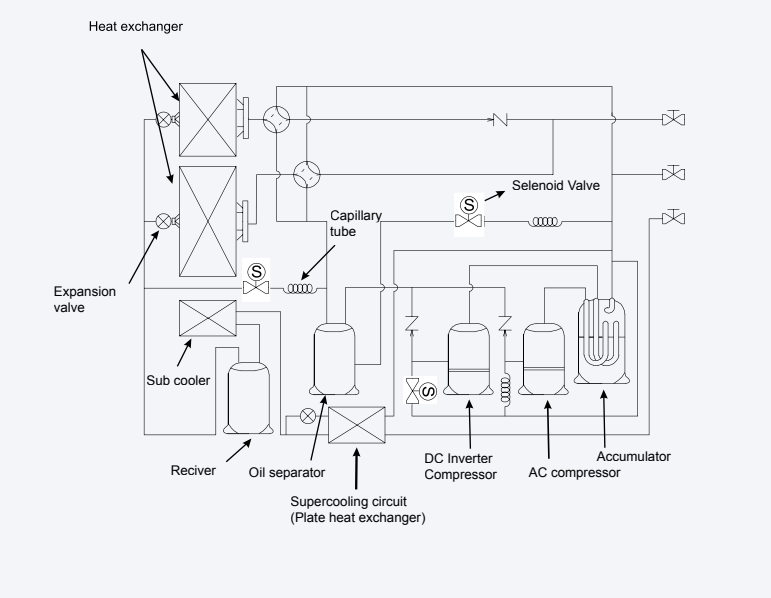

◈ **High efficiency refrigerant cycle for FSVNE**

- Supercooling Circuit

The new FSVNE series has increased efficiency in the refrigerant cycle. HITACHI has developed a new and more efficient heat exchanger.

☛ Circuit for FSVNE:

FXN(E) circuit

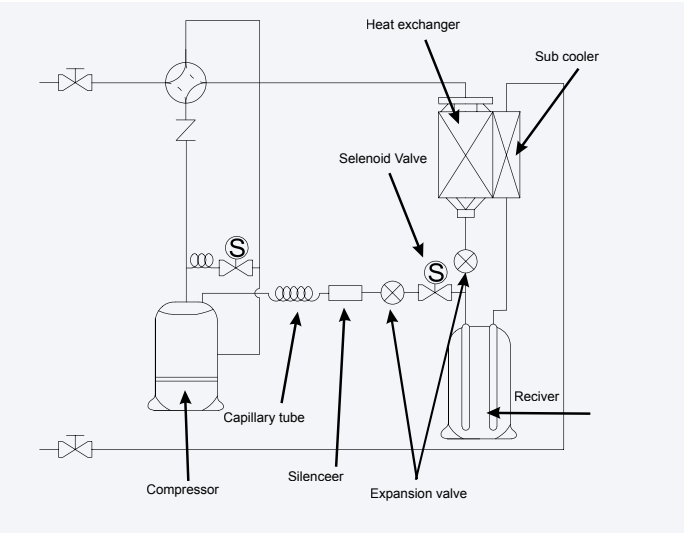

☛ Main features of the units:

- New Aluminum Fins Used for Heat Exchanger

The new smaller flow resistance heat exchanger using new aluminium fins and reduces the pressure loss in pipes due to optimised path alignment in order to provide power saving. Also, it has achieved a lower sound operation due to lower fan revolutions.

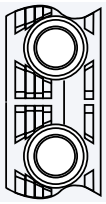

Air flow resistance decreased by 20%.

The optimised slit shape minimises noise by reducing air intake resistance.

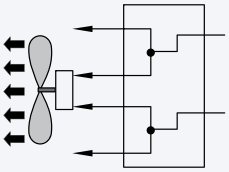

Pressure drop in heat exchanger pipe has been decreased.

- Bigger Heat Exchanger Size

The new bigger heat exchanger size provides increase to the efficiency. A lower flow resistance makes lower sound operation possible.

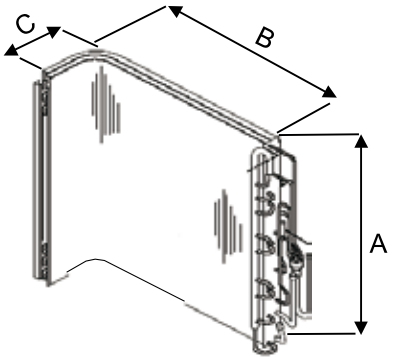

	PREVIOUS MODEL		NEW MODEL	
Dim (mm)	3/4FSVG	5FSVG	3FSVNE	4/5FSVNE
A	760	1200	760	1200
B	691	691	691	791
C	234	234	234	234

- New Liquid Injection System

New high pressure liquid injection directly to the compressor provides discharge pressure increasing and sufficient capacity in heating at low ambient temperature.

Detail of receiver and Gas bypass

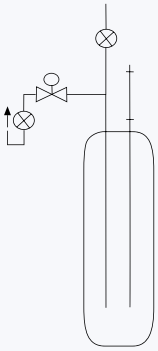

HITACHI
Inspire the Next

1

☛ Main features of the units:

◈ Highly Efficient Scroll Compressor

- Hitachi's exclusives Scroll Compressor

FSN(E)/FXN(E)	FSVNE
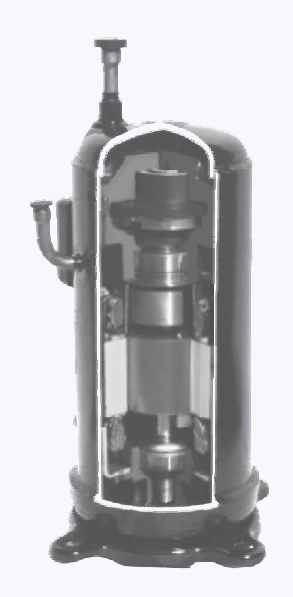	

- The Strong Points of the New Hitachi High Pressure Scroll Compressor
  1. Optimized bearing (2-bearing structure) greatly improves reliability.
  2. Asymmetric scroll lap largely reduces intake and leakage loss.
  3. Oil return circuit design largely reduces heat loss.
  4. Improved lubrication system to provide accurate oiling for the compressor.
- Benefits of the high pressure shell
  1. It acts as an oil separator reducing the amount of oil circulating in the refrigeration system giving better heat exchanger efficiency.
  2. Motor heat is not added to the suction gas before compression, which reduces the discharge gas temperature. This is particularly important at low suction temperatures. The discharge gas adequately cools the motor.
  3. Refrigerant cannot soak the shell during the off cycle causing oil dilution and oil foaming at start up.
- Lubrication

  HITACHI compressors have been developed to be the most efficient and reliable ones on the market. Lubrication is one of the most important items throughout a compressor's lifetime. HITACHI has developed a system based on the pressure differences between suction and discharge, with a system with a support pump at the base of the compressor. Lubrication is perfect, proving to be highly reliable throughout its range of operation, even at low frequencies.

HITACHI
Inspire the Next

☛ Main features of the units:

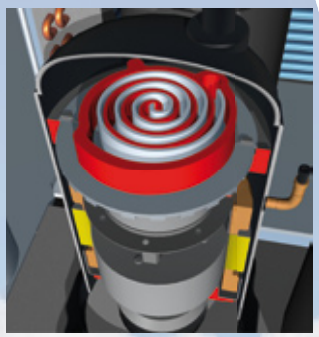

- Noise and Vibration
  1. The scroll compressor offers low sound and vibration levels because the compression points are spread evenly over the compression stroke providing a very flat torque curve.
  2. The minimal number of components used coupled with the high-pressure shell that acts as a silencer further enhances the noise reduction.
  3. Because the noise pattern is high frequency sound it is simple to reduce to a very low level by using an insulation jacket.
  4. Reduce Electromagnetic Compressor Noise.

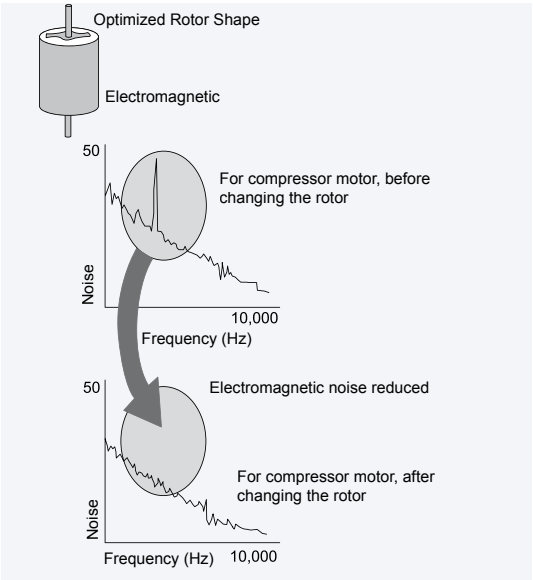

- Protection against Liquid Return

  When the compressor is at rest, the moving Scroll rests on the casing. When the compressor starts to run, the pressure in the chamber under the Scroll builds up through two bleed holes in the medium pressure section of the compression stroke. This pressure then forces the Scroll up against the housing and seals the compression chamber. If liquid returns to the compressor, the resulting increase in pressure forces the Scroll downwards breaking the seal which allows the liquid to pass back into the compressor body where it will boil off due to the higher temperature.

- DC Compressor using Neodymium Magnet

  The use of a DC compressor improves the performance at around the 30–40 Hz range where the operation time of the inverter compressor is longest. Additionally, to suppress electromagnetic noise interference and achieve low noise, the rotor has been divided into two parts and the electric pole displaced.

  Characteristics at low speed, which affect the annual running cost, have been significantly improved.

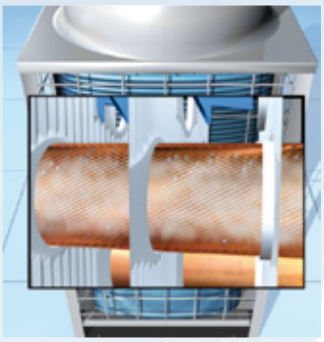

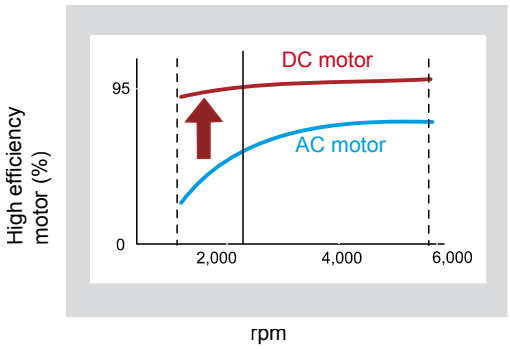

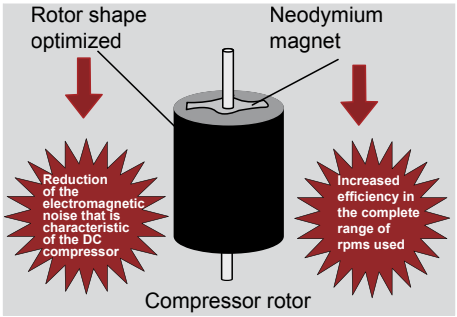

☛ Main features of the units:

1

◆ Quiet

◈ **Inverter Control**

The inverter controls compressor speeds from 30Hz to 115Hz, reaching quickly a set temperature and maintaining a stable energy-saving operation, and reducing the noise since the compressor is not running continuously.

Concept of Operation (in Heating Mode)

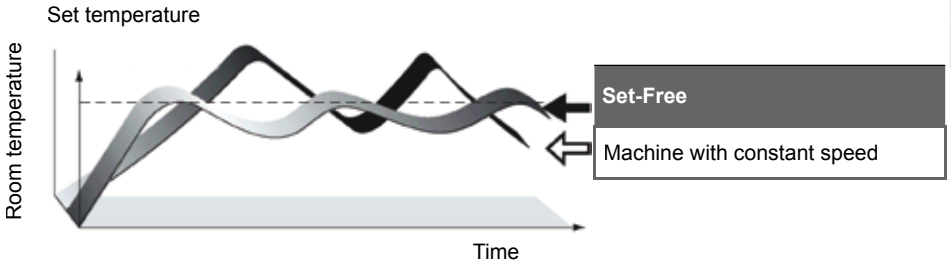

– In the case of Set-Free

Quickly reaches temperature set to high power, then maintains stable energy-saving operation.

– In case of existing constant speed machines:

Slowly reaches the set temperature, then turns on and off repeatedly to maintain the temperature, causing uneconomical operation and "power waste".

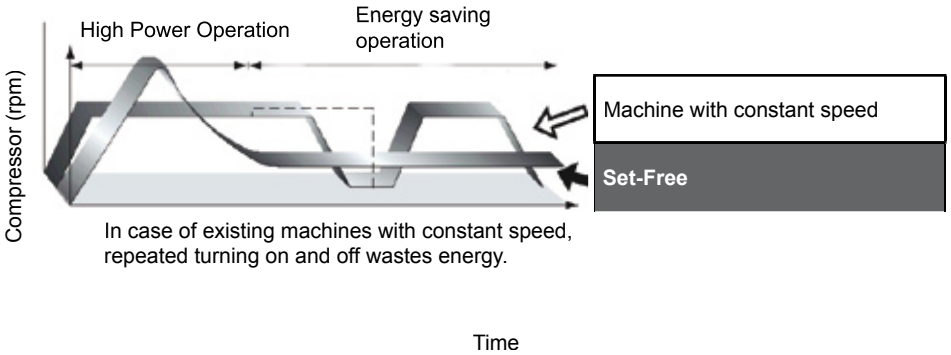

◈ **New DC Inverter PCB**

Newly developed Digital PAM 180º control and New PWM without speed and current sensors.

These two new designs allow the reduction of the harmonic current.
At the same time this allows the reduction of volume and weight by 50%.

– Concept of operation

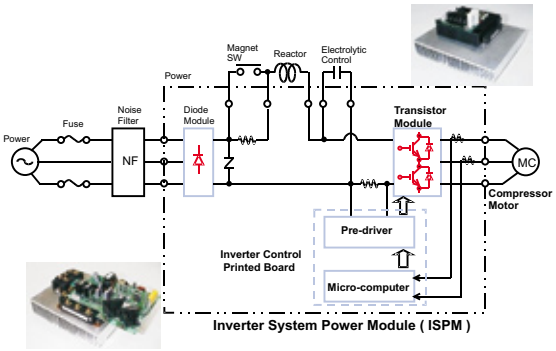

HITACHI
Inspire the Next

☛ Main features of the units:

- DC Motor Drive Control System

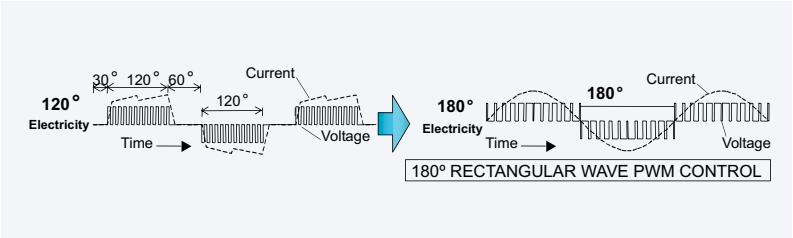

◈ **Enhanced Fan motor Features**

- DC Fan Motor with Outstanding Efficiency

The DC fan motor greatly improves efficiency compared to conventional products that use AC motors. In addition. air blasts are reduced by controlling the rotation speed of the fan. Stable operation is provided against strong head winds of approximately 10 m/s on the front face of the outdoor unit.

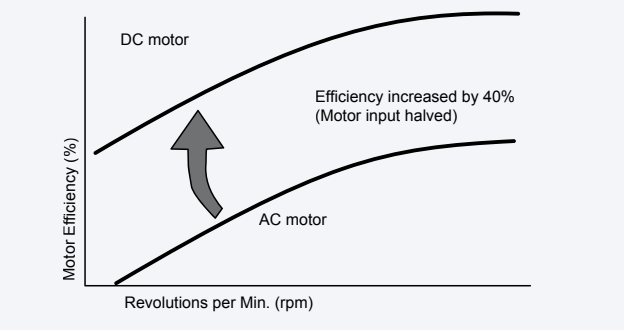

- PWM (pulse width modulation) concept of speed control

The switching element (a power MOSFET) switches back and forth at a frequency of several tens of kHz. This controls the ON//OFF duty rate per cycle and changes the voltage applied to the fan motor to control the rotation speed.

◈ **Enhanced fan motor features for FSN(E)/FXN(E)**

- High Static Pressure

Hitachi uses a long bell mouth to achieve an increase static pressure of up to 60 Pa.

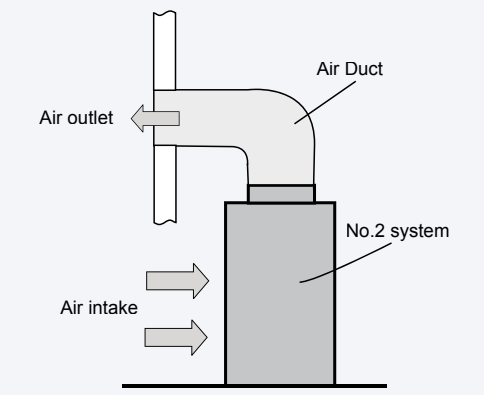

☛ Main features of the units:

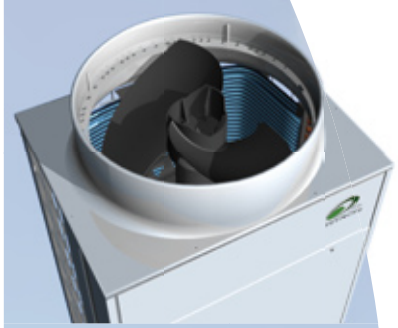

- New fan propeller

Hitachi uses high technology to achieve the lowest sound. The new two bladed propeller, rather than four bladed, achieves a reduction of 2 dB of noise level, increases air flow volume by up to 25%, and at the same time provides an important reduction of motor power input (approximately 8%).

1

◈ Enhanced fan motor features for FSVN(E)

- Stable Operations against Strong Winds

A headwind of 6 m/s or faster will slow down the rotation speed sharply in conventional AC motors, but with a DC motor, the rotation speed will hardly change even for a headwind of up to 10 m/s.

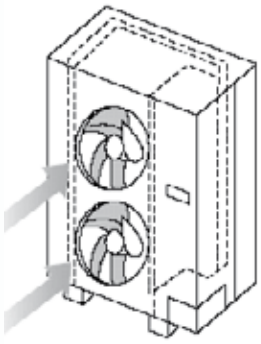

Head wind

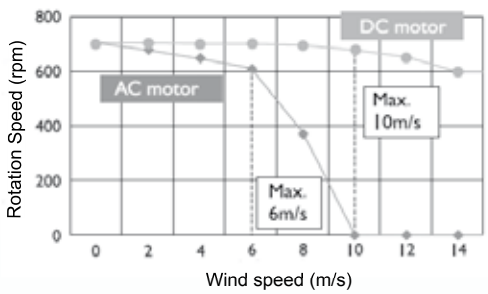

- Top Class Silence Operation

HITACHI uses the latest high technologies to efficiently obtain a lower sound output than their competitors. The applications of the following technologies allow HITACHI to achieve the results shown in the following table.

Outdoor Units Model	Heating mode (dB-A)	Cooling Mode (dB-A)	Night Shift Mode (dB-A)
RAS-3FSVG	47	46	42
RAS-3FSVNE	46	45	41
RAS-4FSVG	48	47	43
RAS-4FSVNE	48	47	43
RAS-5FSVG	51	50	46
RAS-5FSVNE	50	49	45

HITACHI
Inspire the Next

☛ Main features of the units:

- The following technologies allow to optimise sound levels:

  - SuperHigh Stream Fan
  - Delta shaped edges reduce fan size and noise
  - Bellmouth
  - The bell-mouth minimises flow friction, resulting in smooth flow and low sound.

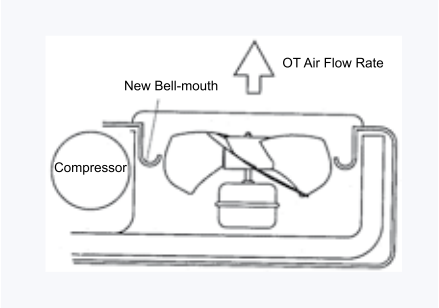

◆ **Large variety of operating possibilities**

The use of these machines along with CS-Net can increase the performance of these installations even more by means of:

- Programming by schedule, which will prevent these machines from running continuously in rooms without users, and will allow rooms to be preheated or pre-refrigerated just before being occupied.
- Limiting the set temperatures, which prevents machines from working at maximum capacity when comfort does not require it.
- Locking functions from the central control, thus avoiding incorrect or ineffective use of the units.
- All these and many more functions allow to optimize the use of the installation as a whole.
- We must also stress that the wide range of indoor units leads to always find the unit with the power and the type of installation that best adapts to each need.

☛ Main features of the units:

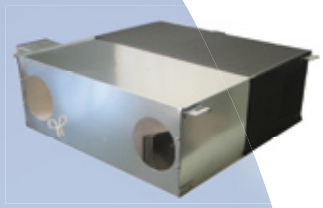

1.6.3. Complementary Systems

Hitachi has different complementary systems that are very useful for conditioning air.

◆ **KPI total heat exchanger system**

HITACHI has developed a system for recovering energy. The system is based in recovering heat from the temperature and moisture differential between outdoor and indoor. In certain installations the continuous renovation of air through the input of outdoor air, in order to provide maximum comfort for the end user, leads to “energy waste”; the KPI unit was developed to avoid this waste.

KPI is a unit that allows to reduce energy loss produced by the input of fresh air without modifying the quality of the indoor ambient.

An installation with KPI not only keeps the temperature stable, but the humidity is maintained as much as possible as well.

A wide range of units has been developed to provide a suitable system for any type of installation.

Model	KPI-2521	KPI-5021	KPI-8021	KPI10021
Flow (m³/h)	250	500	800	1.000
Temperature Exchange Efficiency	83	82	81	81

The KPI unit can the combined with any indoor unit.

◈ **System Description**

The KPI unit has different operating modes which are configured with the remote control switch.

- Total heat exchange mode

Air returned from the indoor side passes through the total heat exchanger and is exhausted outdoors.

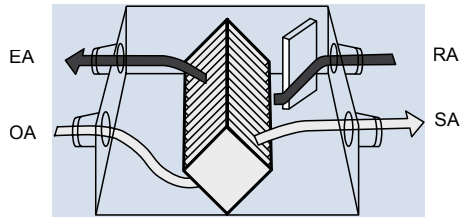

- Ventilation mode

Air returned from the indoor side is exhausted without heat exchange.

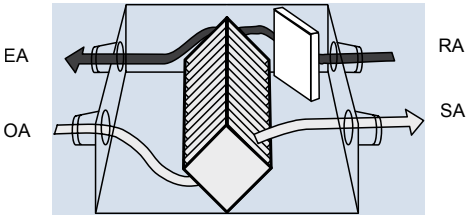

NOTES:

OA: Outdoor Fresh Air
EA: Exhaust Air
SA: Supply Air
RA: Return Air

HITACHI
Inspire the Next

☛ Main features of the units:

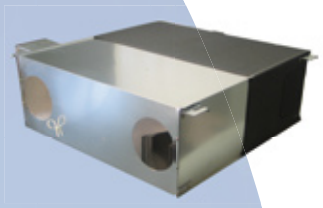

- Automatic choice mode

  Operation mode is automatically selected according to the temperature (outdoor, indoor and set temperature) conditions.

Operation mode	Temperature conditions	KPI operation mode
Cooling	Indoor temp. > Outdoor temp.	Bypass ventilation mode
	Indoor temp. < Outdoor temp.	Total heat exchange mode
Heating mode	Indoor temp. > Outdoor temp.	Total heat exchange mode
	Indoor temp. < Outdoor temp.	Bypass ventilation mode

◈ **Characteristics**

- Low noise level, only the fans are moving
- Flexible installation, the inlets of the ducts of the outdoor part can change position (two directions)
- Heat exchanger, the heat exchanger is made up of highly permeable materials that allow an interchange of latent and perceivable heat between the indoor and the outdoor air. A simple structure and the absence of moving parts reduces the risk of mixing the indoor in the outdoor air.

◈ **Optional functions:**

The KPI unit has two optional functions that can be very easily configured with the remote control switch. These options are:

- Precooling and Preheating Period:

  The timer function makes it possible to delay the startup of the unit between 30 and 60 minutes. When a system starts up, at firstventilation is not necessary and the unit starts up some time later.

- Increasing Supply Air Volume:

  With this option it is possible to increase the supply air during operation of the total heat exchanger. This makes the room pressure higher than the surrounding rooms and prevents polluted air and smells from entering into the room.

☛Main features of the units:

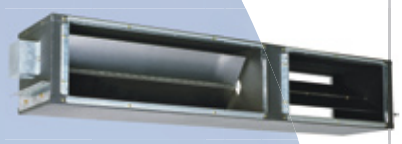

☛Example for RPI-5HP

◆ Econofresh Kit

The new Econofresh kit is an intelligent accessory device that allows, with very easy installation, room air renovations and energy savings.

No refrigerant cycle is required, direct RPI-5HP unit return duct connection is used instead.

The Econofresh kit can provide up to 100% fresh air and has the ability to provide “free cooling” through the damper when the outdoor temperature is below the indoor setting temperature.

This system will not only maintain the correct room temperature and provide fresh air, but it will also provide free cooling and therefore it will increase users energy saving.

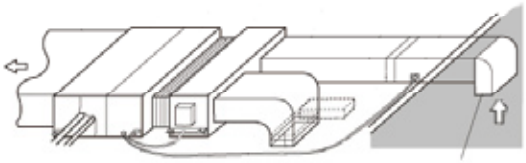

◈ Operation mode

Fresh Cold Air Cooling During Intermediate Seasons Saves Energy.

This unit uses an economizer for cooling, which takes in fresh air if the outdoor temperature is cooler than the indoor air, as shown in the figure below.

In this situation, no compressor is used and thus a remarkable amount of energy is saved.

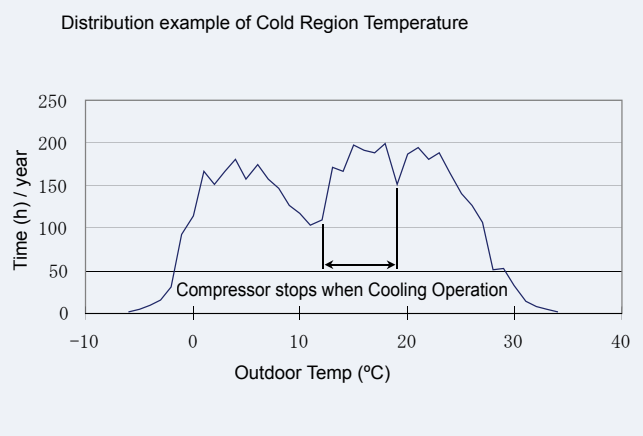

Power input is reduced by more than 20% during cooling operation mode by using the Econofresh kit + RPI -5.0FSNE instead of the UTOPIA RPI system.

- Fresh clean air revives your room

A fresh air intake system always keeps the air in a room clean.

The optional CO^2 sensor can sense the degree of pollution of the air in the room and automatically control the fresh air flow.

NOTE:

If the Outdoor Air Temperature is lower than 3ºC, Fresh Outdoor Air rate will decrease.

Damper Air-Flow-Control Provides Comfortable Cooling.

A micro-computer controls the angle of the damper according to both room air temperature and outdoor temperature to adjust the fresh air flow, thus keeping the room temperature constant.

HITACHI
Inspire the Next

2. General Data

This chapter provides you with a fast review of the most important features of the Indoor, the Outdoor and the Complementary Units of the new Hitachi SET FREE FSN(E)/FXN(E)/FSVNE series

Contents

2. General Data 55

2.1. General Data for Indoor Units 56

2.1.1. RCI – 4-Way Cassette Type 56
2.1.2. RCI (Mini) – 4-Way Cassette Type 57
2.1.3. RCD – 2-Way Cassette Type 58
2.1.4. RPC – Ceiling Type 59
2.1.5. RPI – Duct Type (RPI-0.8~6.0FSN1E) 60
2.1.6. RPI – Duct Type (RPI-8.0~10.0FSNE) 61
2.1.7. RPK – Mural Type (RPK-0.8~4.0FSNM) 62
2.1.8. RPK – Mural Type (RPK-1.0~1.5FSN1M) 63
2.1.9. RPF y RPFI – Floor Type and Floor Concealed Type 64

2.2. RAS – General Data for Outdoor Units 65

2.2.1. RAS – FSN(E) Outdoor units 65
2.2.2. RAS – FXN(E) Outdoor units 67
2.2.3. RAS – FSVN(E) Outdoor units 69

2.3. Complementary systems 70

2.3.1 Total Heat Exchanger KPI 70
2.3.2. Econofresh Kit 71
2.3.3. No.0 Group 71

2.4. Component Data for Indoor Units 72

2.4.1. RCI – 4-Way Cassette Type 72
2.4.2. RCIM – 4-Way Cassette Type 73
2.4.3. RCD – 2-Way Cassette Type 73
2.4.4. RPC – Ceiling Type 74
2.4.5. RPI – Duct Type (RPI-0.8~6.0FSN1E) 74
2.4.6. RPI – Duct Type (RPI-8.0~10.0FSNE) 75
2.4.7. RPK – Mural Type (RPK-0.8~4.0FSNM) 75
2.4.8. RPK – Mural Type (RPK-1.0~1.5FSN1M) 76
2.4.9. RPF – Floor Type & RPFI – Floor Concealed Type 76
2.4.10. Fan and Exchanger of Outdoor Units (RAS-5~18FSN(E)) 77
2.4.11. Fan and Exchanger of Outdoor Units (RAS-20~32FSN) 77
2.4.12. Fan and Exchanger of Outdoor Units (RAS-8~18FXN(E)) 78
2.4.13. Fan and Exchanger of Outdoor Units (RAS-20~32FXN) 78
2.4.14. Fan and Exchanger of Outdoor Units (RAS-3~5FSVNE) 79
2.4.15. Compressor 79

2.1. General Data for Indoor Units

2.1.1. RCI – 4-Way Cassette Type

MODEL RCI			RCI-1.0 FSN1E	RCI-1.5 FSN1E	RCI-2.0 FSN1E	RCI-2.5 FSN1E	RCI-3.0 FSN1E	RCI-3.5 FSN1E	RCI-4.0 FSN1E	RCI-5.0 FSN1E	RCI-6.0 FSN1E
Electrical Power Supply			1~230V, 50 Hz								
Nominal Cooling Capacity		kW	2.80	4.50	5.60	7.10	8.00	9.00	11.20	14.00	16.00
Nominal Heating Capacity		kW	3.20	5.00	6.30	8.50	9.00	10.00	12.50	16.00	18.00
Air Flow Rate (Hi/Me/Lo)		m^3/min	13/12/11	15/14/12	16/14/12	20/17/15	26/23/20	26/23/20	32/28/24	34/29/25	37/32/27
Horse power		W	56	56	56	56	56	56	108	108	108
Sound Pressure Level (Overall A Scale) (/Hi/Me/Lo)		dB (A)	32/30/28	32/30/28	32/30/28	32/30/28	34/32/30	34/32/30	38/35/33	39/37/35	42/40/36
Outer Dimensions	Height	mm	248	248	248	248	298	298	298	298	298
	Width	mm	840	840	840	840	840	840	840	840	840
	Depht	mm	840	840	840	840	840	840	840	840	840
Net weight		Kg	23	23	24	24	26	26	29	29	29
Refrigerant			R410A (Nitrogen charge in Factory for Corrosion-Resistance)								
Refrigeration Piping Connections			Flare Nuts Connection (with Flare Nuts)								
Liquid Pipe		mm (in)	ø6.35 (1/4)	ø6.35 (1/4)	ø6.35 (1/4)	ø9.53 (3/8)	ø9.53 (3/8)	ø9.53 (3/8)	ø9.53 (3/8)	ø9.53 (3/8)	ø9.53 (3/8)
Gas pipe		mm (in)	ø12.7 (1/2)	ø12.7 (1/2)	ø15.88 (5/8)	ø15.88 (5/8)	ø15.88 (5/8)	ø15.88 (5/8)	ø15.88 (5/8)	ø15.88 (5/8)	ø15.88 (5/8)
Flare Connection Condensate Drain		mm	ø32 OD	ø32 OD	ø32 OD	ø32 OD	ø32 OD	ø32 OD	ø32 OD	ø32 OD	ø32 OD
Maximum electrical power consumption		A	0.2	0.2	0.2	0.3	0.4	0.4	0.7	0.8	1.0
Packing Measurement		m^3	0.22	0.22	0.22	0.22	0.26	0.26	0.26	0.26	0.26
Adaptable Air Panel Model		-	P-G23WA2								
Color (Munsell Code)		-	Spring White (4.1Y8.5 / 0.7)								
Outer Dimensions	Height	mm	37	37	37	37	37	37	37	37	37
	Width	mm	950	950	950	950	950	950	950	950	950
	Depht	mm	950	950	950	950	950	950	950	950	950
Net weight		Kg	6	6	6	6	6	6	6	6	6
Packing Measurement		m^3	0.08	0.08	0.08	0.08	0.08	0.08	0.08	0.08	0.08
Remote control switch		-	PC-P1HE								

OD: Outer Diameter

NOTE:

1. The nominal cooling and heating capacity is the combined capacity of the SET FREE system, and is based on JIS 158616.

Operation condition		Cooling	Heating
Indoor Air Inlet Temperature	DB	27.0 °C	20.0 °C
	WB	19.0 °C	
Outdoor Air Inlet Temperature	DB	35.0 °C	7.0 °C
	WB		6.0 °C

Piping Lenght: 7.5 meters; Piping Lift: 0 metres.
DB: Dry Bulb; WB: Wet Bulb

2. The Sound Pressure Level is based on following conditions:
   - 1.5 meter beneath the unit.
   - Voltage of the power source is 230 V.

   The above data was measured in an anaechoic chamber so that reflected sound should be taken into consideration when installing the unit.

3. Panel P-G23WA2 is equipped with an automatic swing louver system.

2.1.2. RCI (Mini) – 4-Way Cassette Type

MODEL RCIM			RCIM-1.0 FSN	RCI-1.5 FSN	RCIM-2.0 FSN
Electrical Power Supply			1~230V, 50 Hz		
Nominal Cooling Capacity		kW	2.80	4.50	4.50
Nominal Heating Capacity		kW	3.20	5.00	6.30
Air Flow Rate (Hi/Me/Lo)		m^3/min	13/12/11	15/13.5/12	16/14/12
Horse power		W	52	52	52
Sound Pressure Level (Overall A Scale) (/Hi/Me/Lo)		dB (A)	36/34/32	38/35/33	42/39/37
Outer Dimensions	Height	mm	295	295	295
	Width	mm	570	570	570
	Depht	mm	570	570	570
Net weight		Kg	17	17	17
Refrigerant			R410A (Nitrogen charge in Factory for Corrosion-Resistance)		
Refrigeration Piping Connections			Flare Nuts Connection (with Flare Nuts)		
Liquid Pipe		mm (in)	ø6.35 (1/4)	ø6.35 (1/4)	ø6.35 (1/4)
Gas pipe		mm (in)	ø12.7 (1/2)	ø12.7 (1/2)	ø15.88 (5/8)
Flare Connection Condensate Drain		mm	ø32 OD	ø32 OD	ø32 OD
Maximum electrical power consumption		A	0.4	0.4	0.4
Packing Measurement		m^3	0.13	0.13	0.13
Adaptable Air Panel Model		-	P-N23WAM		
Color (Munsell Code)		-	Plaster white (4.1Y8.5 / 0.7)		
Outer Dimensions	Height	mm	35	35	35
	Width	mm	700	700	700
	Depht	mm	700	700	700
Net weight		Kg	3.5	3.5	3.5
Packing Measurement		m^3	0.07	0.07	0.07
Remote control switch		-	PC-P1HE		

OD: Outer Diameter

NOTE:

1. The nominal cooling and heating capacity is the combined capacity of the SET FREE system, and is based on JIS 158616.

Operation condition		Cooling	Heating
Indoor Air Inlet Temperature	DB	27.0 °C	20.0 °C
	WB	19.0 °C	
Outdoor Air Inlet Temperature	DB	35.0 °C	7.0 °C
	WB		6.0 °C

Piping Lenght: 7.5 meters; Piping Lift: 0 metres.
DB: dry bulb; WB: Wet Bulb

2. The Sound Pressure Level is based on following conditions:
   - 1.5 meters below the unit.
   - Voltage of the power source is 230 V.

The data above was measured in an anaechoic chamber so that reflected sound should be taken into consideration when installing the unit.

3. Panel P-G23WA2 is equipped with an automatic swing louver system.

2.1.3. RCD – 2-Way Cassette Type

MODEL RCD			RCD-1.0 FSN	RCD-1.5 FSN	RCD-2.0 FSN	RCD-2.5 FSN	RCD-3.0 FSN	RCD-4.0 FSN	RCD-5.0 FSN
Electrical power supply			1~230V, 50 Hz						
Nominal Cooling Capacity		kW	2.80	4.50	5.60	7.10	8.00	11.20	14.00
Nominal Heating Capacity		kW	3.20	5.00	6.30	8.50	9.00	12.50	16.00
Air Flow Rate (Hi/Me/Lo)		m^3/min	8/7/6	12/10/8.5	15/13/11	19/16/14	22/19/16	28/24/21	34/29/25
Horse power		W	35	35	35	55	55	35x2	35x2
Sound Pressure Level (Overall A Scale) (/Hi/Me/Lo)		dB (A)	34/32/30	35/32/30	35/32/30	38/34/31	40/36/33	40/36/33	43/40/36
Outer Dimensions	Height	mm	298	298	298	298	298	298	298
	Width	mm	860	860	860	860	860	1420	1420
	Depht	mm	620	620	620	620	620	620	620
Net weight		Kg	27	27	27	30	30	48	48
Refrigerant			R410A (Nitrogen charge in Factory for Corrosion-Resistance)						
Connections Refrigeration Piping			Flare Nuts Connection (with Flare Nuts)						
Liquid Pipe		mm (in)	∅6.35 (1/4)	∅6.35 (1/4)	∅6.35 (1/4)	∅9.53 (3/8)	∅9.53 (3/8)	∅9.53 (3/8)	∅9.53 (3/8)
Gas pipe		mm (in)	∅12.7 (1/2)	∅12.7 (1/2)	∅15.88 (5/8)	∅15.88 (5/8)	∅15.88 (5/8)	∅15.88 (5/8)	∅15.88 (5/8)
Flare Connection Condensate Drain		mm	Ø32 OD	Ø32 OD	Ø32 OD	Ø32 OD	Ø32 OD	Ø32 OD	Ø32 OD
Maximum electrical power consumption		A	0.2	0.4	0.4	0.5	0.6	0.6	0.9
Packing Measurement		m^3	0.23	0.23	0.23	0.23	0.23	0.37	0.37
Standard Accesories		-	Suspension brackets						
Adaptable Air Panel Model			P-G23DWA1					P-G46DWA1	
Colour (Munsell Code)			Silky White						
Outer Dimensions	Height	mm	30+10	30+10	30+10	30+10	30+10	30+10	30+10
	Width	mm	1100	1100	1100	1100	1100	1660	1660
	Depht	mm	710	710	710	710	710	710	710
Net weight		Kg	6	6	6	6	6	8	8
Packing Measurement		m^3	0.10	0.10	0.10	0.10	0.10	0.15	0.15
Remote control switch		-	PC-P1HE						

OD: Outer Diameter

NOTE:

1. The nominal cooling and heating capacity is the combined capacity of the SET FREE system, and is based on JIS 158616.

Operation condition		Cooling	Heating
Indoor Air Inlet Temperature	DB	27.0 °C	20.0 °C
	WB	19.0 °C	
Outdoor Air Inlet Temperature	DB	35.0 °C	7.0 °C
	WB		6.0 °C

Piping Lenght: 7.5 meters; Piping Lift: 0 metres.
DB: Dry Bulb; WB: Wet Bulb

2. The Sound Pressure Level is based on following conditions:
   - 1.5 meters below the unit.
   - Voltage of the power source is 230 V.

The data above was measured in an anaechoic chamber so that reflected sound should be taken into consideration when installing the unit.

3. Panels P-G23DWA1 and P-G46WA1 are equipped with an automatic swing louver system.

2.1.4. RPC – Ceiling Type

MODEL RPC			RPC-2.0 FSNE	RPC-2.5 FSNE	RPC-3.0 FSNE	RPC-3.5 FSNE	RPC-4.0 FSNE	RPC-5.0 FSNE	RPC-6.0 FSNE
Electrical power supply			1~230V, 50 Hz						
Nominal Cooling Capacity		kW	5.60	7.10	8.00	9.00	11.20	14.00	16.00
Nominal Heating Capacity		kW	6.30	8.50	9.00	10.00	12.50	16.00	18.00
Air Flow Rate (Hi/Me/Lo)		m^3/min	15/13/10	18/16/12	21/17/15	21/17/15	30/24/19	35/28/21	37/32/27
Horse power		W	75	75	75	75	145	145	145
Sound Pressure Level (Overall A Scale) (/Hi/Me/Lo)		dB (A)	44/42/38	46/43/41	48/45/42	48/45/42	49/45/39	49/46/41	50/48/44
Outer Dimensions	Height	mm	163	163	163	163	225	225	225
	Width	mm	1094	1314	1 314	1314	1314	1574	1574
	Depht	mm	625	625	625	625	625	625	625
Net weight		Kg	28	31	31	31	35	41	41
Colour (Munsell Code)			Spring White (4.1Y 8.5 / 0.7)						
Refrigerant			R410A (Nitrogen charge in Factory for Corrosion-Resistance)						
Connections Refrigeration Piping			Flare Nuts Connection (with Flare Nuts)						
Liquid Pipe		mm (in)	Ø6.35 (1/4)	Ø9.53 (3/8)	Ø9.53 (3/8)	Ø9.53 (3/8)	Ø9.5 (3/8)	Ø9.53 (3/8)	Ø9.53 (3/8)
Gas pipe		mm (in)	Ø15.88 (5/8)	Ø15.88 (5/8)	Ø15.88 (5/8)	Ø15.88 (5/8)	Ø15.88 (5/8)	Ø15.88 (5/8)	Ø15.88 (5/8)
Flare Connection Condensate Drain		mm	∅25 OD	∅25 OD	∅25 OD	∅25 OD	∅25 OD	∅25 OD	∅25 OD
Maximum electrical power consumption		A	0.6	0.7	0.8	0.8	0.8	1.1	1.1
Packing Measurement		m^3	0.24	0.29	0.29	0.29	0.36	0.43	0.43
Remote control switch		-	PC-P1HE						

OD: Outer Diameter

NOTE:

1. The nominal cooling and heating capacity is the combined capacity of the SET FREE system, and is based on JIS 158616.

Operation condition		Cooling	Heating
Indoor Air Inlet Temperature	DB	27.0 °C	20.0 °C
	WB	19.0 °C	
Outdoor Air Inlet Temperature	DB	35.0 °C	7.0 °C
	WB		6.0 °C

Piping Lenght: 7.5 meters; Piping Lift: 0 metres.
DB: Dry Bulb; WB: Wet Bulb

2. The Sound Pressure Level is based on following conditions:
   - 1 meter below the unit.
     1 meter from the impulse louver.
   - Voltage of the power source is 230 V.

The data above was measured in an anaechoic chamber so that reflected sound should be taken into consideration when installing the unit.

2.1.5. RPI – Duct Type (RPI-0.8~6.0FSN1E)

MODEL RPI			RPI-0.8 FSN1E	RPI-1.0 FSN1E	RPI-1.5 FSN1E	RPI-2.0 FSN1E	RPI-2.5 FSN1E	RPI-3.0 FSN1E	RPI-3.5 FSN1E	RPI-4.0 FSN1E	RPI-5.0 FSN1E	RPI-6.0 FSN1E
Electrical power supply			1~230V, 50 Hz									
Nominal Cooling Capacity		kW	2.20	2.80	4.50	5.60	7.10	8.00	9.00	11.20	14.00	16.00
Nominal Heating Capacity		kW	2.50	3.20	5.00	6.30	8.50	9.00	10.00	12.50	16.00	18.00
Air Flow Rate (Nominal/Lo)		m³/min	8/7	8/7	10/9	16/13	19/15	22/17	22/17	30/28	35/31	36/32
Static pressure (Hi-01/Hi-00/Hi-02)		mmAq	4/2.5/2.5	4/2.5/2.5	4/2.5/2.5	8/5/2.5	8/5/2.5	12/8/4	12/8/4	12/8/2	12/8/2	12/8/2
Horse power		W	40	40	55	65	65	150	150	225	225	385
Sound Pressure Level (Overall A Scale) (/Hi/Lo)		dBA	34/31	34/31	35/32	33/29	35/30	35/31	35/31	37/35	39/37	40/39
Sound Power Level (Overall A Scale)		dBA	55	55	56	59	60	60	60	62	63	64
Outer Dimensions	Height	mm	197	197	197	274	274	274	274	274	274	274
	Width	mm	1020	1020	1020	1074	1074	1074	1074	1464	1464	1464
	Depht	mm	574	574	574	643	643	643	643	643	643	643
Net weight		Kg	33.5	33.5	33.5	43	45	45	45	51	52	52
Refrigerant			R410A (Nitrogen charged in Factory for Corrosion-Resistance)									
Refrigerant Piping Connections			Flare Nuts Connection (with Flare Nuts)									
Liquid Pipe		mm (in)	Ø6.35 (1/4)	Ø6.35 (1/4)	Ø6.35 (1/4)	Ø6.35 (1/4)	Ø9.53 (3/8)	Ø9.53 (3/8)	Ø9.53 (3/8)	Ø9.53 (3/8)	Ø 9.53 (3/8)	Ø9.53 (3/8)
Gas pipe		mm (in)	Ø12.7 (1/2)	Ø12.7 (1/2)	Ø12.7 (1/2)	Ø15.88 (5/8)	Ø15.88 (5/8)	Ø15.88 (5/8)	Ø15.88 (5/8)	Ø15.88 (5/8)	Ø15.88 (5/8)	Ø15.88 (5/8)
Condense Drain		mm	Ø32 OD	Ø32 OD	Ø32 OD	Ø32 OD	Ø32 OD	Ø32 OD	Ø32 OD	Ø32 OD	Ø32 OD	Ø32 OD
Maximum electrical power consumption		A	0.3	0.3	0.6	0.9	1.1	1.2	1.2	1.2	1.8	1.8
Packing Measurement		m³	0.16	0.16	0.16	0.36	0.36	0.36	0.36	0.48	0.48	0.48
Standard accessories			A. Filter									
Remote control switch		-	PC-P1HE									

OD: Outer Diameter

NOTE:

1. The nominal cooling and heating capacity is the combined capacity of the SET FREE system, and is based on JIS 158616.

Operation condition		Cooling	Heating
Indoor Air Inlet Temperature	DB	27.0 °C	20.0 °C
	WB	19.0 °C	
Outdoor Air Inlet Temperature	DB	35.0 °C	7.0 °C
	WB		6.0 °C

Piping Lenght: 7.5 meters; Piping Lift: 0 metres.
DB: Dry Bulb; WB: Wet Bulb

2. The Sound Pressure Level is based on following conditions:
   - 1.5 meter beneath the Unit (without ceiling under the unit), applying suction duct 1m. and discharge duct 2m.
   - Voltage of the power source is 230 V.

The data above was measured in an anaechoic chamber so that reflected sound should be taken into consideration when installing the unit.

2.1.6. RPI – Duct Type (RPI-8.0~10.0FSNE)

MODEL RPI			RPI-8.0 FSNE	RPI-10.0 FSNE
Electrical power supply			1~230V, 50 Hz	
Nominal Cooling Capacity		kW	22,40	28,00
Nominal Heating Capacity		kW	25,00	31,50
Air Flow Rate (Nominal/Lo)		m³/min	66/58	75/67
Static pressure (Hi-01/Hi-00)		mmAq	18/22	18/22
Horse power		W	1250	1250
Sound Pressure Level (Overall A Scale) (/Hi/Lo)		dBA	54/51	55/52
Sound Power Level (Overall A Scale)		dBA	73	74
Outer Dimensions	Height	mm	475	475
	Width	mm	1580	1580
	Depht	mm	600	600
Net weight		Kg	85	87
Refrigerant			R410A (Nitrogen charge in Factory for Corrosion-Resistance)	
Refrigerant Piping Connections			Brazed Connection	
Liquid Pipe		mm(in)	Ø 9.53 (3/8)	Ø9.53 (3/8)
Gas pipe		mm(in)	Ø19.05 (3/4	Ø22.2(7/8)
Condense Drain		mm	Ø25 OD	Ø25 OD
Maximum electrical power consumption		A	4,7	5,2
Packing Measurement		m³	0,5	0,5
Standard accessories			A. Filter	
Remote control switch		-	PC-P1HE	

OD: Outer Diameter

NOTE:

1. The nominal cooling and heating capacity is the combined capacity of the SET FREE system, and is based on JIS 158616.

Operation condition		Cooling	Heating
Indoor Air Inlet Temperature	DB	27.0 °C	20.0 °C
	WB	19.0 °C	
Outdoor Air Inlet Temperature	DB	35.0 °C	7.0 °C
	WB		6.0 °C

Pipng Lenght: 7.5 meters; Piping Lift: 0 metres.
DB: Dry Bulb; WB: Wet Bulb

2. The Sound Pressure Level is based on following conditions:
   - 1.5 meters beneath the Unit (without ceiling under the unit), applying suction duct 1m. away and discharge duct 2m. away.
   - Voltage of the power source is 230 V.

The data above was measured in an anaechoic chamber so that reflected sound should be taken into consideration when installing the unit.

2.1.7. RPK – Mural Type (RPK-0.8~4.0FSNM)

MODEL RPK			RPK-0.8 FSNM	RPK-1.0 FSNM	RPK-1.5 FSNM	RPK-2.0 FSNM	RPK-2.5 FSNM	RPK-3.0 FSNM	RPK-3.5 FSNM	RPK-4.0 FSNM
Electrical power supply			1~230V, 50 Hz							
Nominal Cooling Capacity		kW	2.20	2.80	4.50	5.60	7.10	8.00	9.00	11.20
Nominal Heating Capacity		kW	2.50	3.20	5.00	6.30	8.50	9.00	10.00	12.50
Air Flow Rate (Hi/Me/Lo)		m³/min	11/9/8	11/9/8	13/11/9	14/12/10	22/18/15	22/18/15	26/24/20	26/24/20
Horse power		W	20	20	20	20	40	40	41	41
Sound Pressure Level (Overall A Scale) (/Hi/Me/Lo)		dB (A)	36/34/31	36/34/31	39/37/34	40/38/36	43/40/37	43/40/37	49/46/43	49/46/43
Outer Dimensions	Height	mm	295	295	295	295	360	360	360	360
	Width	mm	1030	1030	1030	1030	1390	1390	1390	1390
	Depht	mm	183	183	183	183	225	225	225	225
Net weight		Kg	12	12	12	12	21	21	22	22
Colour (Munsell Code)			Pearl White							
Refrigerant			R410A (Nitrogen charge in Factory for Corrosion-Resistance)							
Connections			Flare Nuts Connection (with Flare Nuts)							
Refrigeration Piping	Liquid Pipe	mm (in)	Ø6.35 (1/4)	Ø6.35 (1/4)	Ø6.35 (1/4)	Ø6.35 (1/4)	Ø9.53 (3/8)	Ø9.53 (3/8)	Ø9.53 (3/8)	Ø9.53 (3/8)
	Gas pipe	mm (in)	Ø12.7 (1/2)	Ø12.7 (1/2)	Ø12.7 (1/2)	Ø15.88 (5/8)	Ø15.88 (5/8)	Ø15.88 (5/8)	Ø15.88 (5/8)	Ø15.88 (5/8)
Flare Connection Condensate Drain			Ø26 OD	Ø26 OD	Ø26 OD	Ø26 OD	Ø26 OD	Ø26 OD	Ø26 OD	Ø26 OD
Maximum electrical power consumption		A	0.3	0.3	0.3	0.3	0.7	0.7	0.7	0.7
Packing Measurement		m³	0.11	0.11	0.11	0.11	0.20	0.20	0.20	0.20
Standard Accesories			Mounting Brackets							
Remote control switch			PC-LH3A or PC-P1HE							

OD: Outer Diameter

NOTE:

1. The nominal cooling and heating capacity is the combined capacity of the SET FREE system, and is based on JIS 158616.

Operation condition		Cooling	Heating
Indoor Air Inlet Temperature	DB	27.0 °C	20.0 °C
	WB	19.0 °C	
Outdoor Air Inlet Temperature	DB	35.0 °C	7.0 °C
	WB		6.0 °C

Piping Lenght: 7.5 meters; Piping Lift: 0 metres.
DB: Dry Bulb; WB: Wet Bulb

2. The Sound Pressure Level is based on following conditions:
   - 1 meter below the unit.
     1 meter from the impulse louver.
   - Voltage of the power source is 230 V.

The data above was measured in an anaechoic chamber so that reflected sound should be taken into consideration when installing the unit.

2.1.8. RPK – Mural Type (RPK-1.0~1.5FSN1M)

MODEL RPK			RPK–1.0FSN1M	RPK -1.5FSN1M
Electrical power supply			1~230V, 50 Hz	
Nominal Cooling Capacity		kW	2.80	4.50
Nominal Heating Capacity		kW	3.20	5.00
Air Flow Rate (Hi/Me/Lo)		m³/min	10/8/7	11/10/9
Horse power		W	20	20
Sound Pressure Level (Overall A Scale) (/Hi/Me/Lo)		dB (A)	38-36-34	40-38-36
Outer Dimensions	Height	mm	280	280
	Width	mm	780	780
	Depht	mm	210	210
Net weight		Kg	10	10
Colour (Munsell Code)		-	Pearl White	
Refrigerant		-	R410A (Nitrogen charge in Factory for Corrosion-Resistance)	
Connections		-	Flare Nuts Connection (with Flare Nuts)	
Refrigeration Piping	Liquid Pipe	mm (inches)	Ø6.35 (1/4)	Ø6.35 (1/4)
	Gas pipe	mm (inches)	Ø12.7 (1/2)	Ø12.7 (1/2)
Flare Connection Condensate Drain		mm	Ø26 OD	Ø26 OD
Maximum electrical power consumption		A	0.2	0.2
Packing Measurement		m³	0.07	0.07
Standard Accesories		-	Mounting Brackets	
Remote control switch		-	PC-LH3A or PC-P1HE	

OD: Outer Diameter

NOTE:

1. The nominal cooling and heating capacity is the combined capacity of the SET FREE system, and is based on JIS 158616.

Operation condition		Cooling	Heating
Indoor Air Inlet Temperature	DB	27.0 °C	20.0 °C
	WB	19.0 °C	
Outdoor Air Inlet Temperature	DB	35.0 °C	7.0 °C
	WB		6.0 °C

Piping Lenght: 7.5 meters; Piping Lift: 0 metres.
DB: dry bulb; WB: Wet Bulb

2. The Sound Pressure Level is based on following conditions:
   - 1 meter below the unit.
     1 meter from the impulse louver.
   - Voltage of the power source is 230 V.

The data above was measured in an anaechoic chamber so that reflected sound should be taken into consideration when installing the unit.

2.1.9. RPF y RPFI – Floor Type and Floor Concealed Type

MODELS RPF & RPFI			RPF-1.0 FSNE	RPF-1.5 FSNE	RPF-2.0 FSNE	RPF-2.5 FSNE	RPFI-1.0 FSNE	RPFI-1.5 FSNE	RPFI-2.0 FSNE	RPFI-2.5 FSNE
Electrical power supply			1~230V, 50 Hz							
Nominal Cooling Capacity		kW	2.80	4.50	5.60	7.10	2.80	4.50	5.60	7.10
Nominal Heating Capacity		kW	3.20	5.00	6.30	8.50	3.20	5.00	6.30	8.50
Air Flow Rate (Hi/Me/Lo)		m^3/min	8.5/7/6	12/10/9	16/14/11	16/14/11	8.5/7/6	12/10/9	16/14/11	16/14/11
Horse power		W	20	28	45	45	20	28	45	45
Sound Pressure Level (Overall A Scale) (/Hi/Me/Lo)		dB (A)	35/32/29	38/35/31	39/36/32	42/38/34	35/32/29	38/35/31	39/36/32	42/38/34
Outer Dimensions	Height	mm	630	630	630	630	620	620	620	620
	Width	mm	1045	1170	1420	1420	848	973	1223	1223
	Depht	mm	220	220	220	220	220	220	220	220
Net weight		Kg	19	23	33	34	19	23	27	28
Colour (Munsell Code)		-	Spring White (4.1Y8.5/0.7)							
Refrigerant		-	R410A (Nitrogen charge in Factory for Corrosion-Resistance)							
Connections			Flare Nuts Connection (with Flare Nuts)							
Refrigeration Piping	Liquid Pipe	mm (in)	Ø6.35 (1/4)	Ø6.35 (1/4)	Ø6.35 (1/4)	Ø9.53 (3/8)	Ø6.35 (1/4)	Ø6.35 (1/4)	Ø6.35 (1/4)	Ø9.53 (3/8)
	Gas pipe	mm (in)	Ø12.7 (1/2)	Ø12.7 (1/2)	Ø15.88 (5/8)	Ø15.88 (5/8)	Ø12.7 (1/2)	Ø12.7 (1/2)	Ø15.88 (5/8)	Ø15.88 (5/8)
Flare Connection Condensate Drain		mm	Ø18.5 OD	Ø18.5 OD	Ø18.5 OD	Ø18.5 OD	Ø18.5 OD	Ø18.5 OD	Ø18.5 OD	Ø18.5 OD
Maximum electrical power consumption		A	0.2	0.2	0.4	0.4	0.2	0.2	0.4	0.4
Packing Measurement		m^3	0.22	0.24	0.29	0.29	0.22	0.23	0.25	0.25
Remote control switch		-	PC-P1HE							

OD: Outer Diameter

NOTE:

1. The nominal cooling and heating capacity is the combined capacity of the SET FREE system, and is based on JIS 158616.

Operation condition		Cooling	Heating
Indoor Air Inlet Temperature	DB	27.0 °C	20.0 °C
	WB	19.0 °C	
Outdoor Air Inlet Temperature	DB	35.0 °C	7.0 °C
	WB		6.0 °C

Piping Lenght: 7.5 meters; Piping Lift: 0 metres.
DB: Dry Bulb; WB: Wet Bulb

2. The Sound Pressure Level is based on following conditions:
   - 1 meter from the floor level.
     1 meter from the front surface of the units.
   - Voltage of the power source is 230 V.
   - The above data was measured in an anaechoic chamber so that reflected sound should be taken into consideration when installing the unit.

2.2. RAS – General Data for Outdoor Units

2.2.1. RAS – FSN(E) Outdoor Units

◆ **RAS-5~18FSN(E)**

MODEL RAS			RAS-5FSN	RAS-8FSN(E)	RAS-10FSN(E)	RAS-12FSN(E)	RAS-14FSN	RAS -16FSN	RAS-18FSN
Electrical power supply			3~400V, 50 Hz						
Nominal Cooling Capacity		kW	14.00	22.40	28.00	33.50	40.00	45.00	50.00
Nominal Heating Capacity		kW	16.00	25.00	31.50	37.50	45.00	50.00	56.00
Coefficient of performance (COP)			3.60	4.08	3.65	3.70	3.68	3.89	3.76
Energy efficiency rate (EER)			3.01	3.21	3.21	3.16	2.82	2.86	3.33
Colour (Munsell Code)		-	Natural Grey (1.0Y8.5/0.5)						
Sound Pressure Level (night mode)		dB (A)	52/(47)	56/(51)	58/(53)	60/(55)	61/(56)	62/(57)	62/(57)
Outer Dimensions	Height	mm	1645	1745	1745	1745	1745	1745	1745
	Width	mm	630	950	950	950	1210	1210	1910
	Depht	mm	750	750	750	750	750	750	750
Net weight		Kg	160	260	270	270	370	370	490
Refrigerant		-	R410A						
Flow Control		-	Micro processor Controlled Expansion Valve						
Compressor		-	Hermetic (Scroll)						
Q´ty		-	1	1+1	1+1	1+1	1+2	1+2	1+2
Horse power		kW	3.0	1.8+3.7	2.3+4.4	3.7+4.4	3.0+3.7×2	3.0+4.4×2	3.7+4.4×2
Heat exchanger			Multi-Pass Cross-Finned Tube						
Condenser Fan		-	Propeller Fan						
Q´ty		-	1	1	1	1	1	1	2
OT Air Flow Rate		m³/min	87	138	172	185	210	210	344
Horse power		W	160	380	380	380	380	380	380+275
Connections			Flare-Nut and/or Flange Connection (Factory supplied)						
Refrigeration Piping	Liquid Pipe	mm (in)	Ø9.53 (3/8)	Ø9.53 (3/8)	Ø9.53 (3/8)	Ø12.70 (1/2)	Ø12.70 (1/2)	Ø12.70 (1/2)	Ø15.88 (5/8)
	Gas pipe	mm (in)	Ø15.88 (5/8)	Ø19.05 (3/4)	Ø22.2 (7/8)	Ø25.4 (1)	Ø25.4 (1)	Ø28.6 (1-1/8)	Ø28.6 (1-1/8
Refrigerant Charge		Kg	5.4	8.5	9.5	10.0	13.0	13.0	18.0
Maximum electrical power consumption		A	9.0	14.0	17.0	21.0	30.0	33.0	32.0
Packing Measurement		m³	0.87	1.44	1.44	1.44	1.81	1.81	2.82

OD: Outer Diameter

NOTE:

1. The nominal cooling and heating capacity is the combined capacity of the SET FREE system, and is based on JIS 158616.

Operation condition		Cooling	Heating
Indoor Air Inlet Temperature	DB	27.0 °C	20.0 °C
	WB	19.0 °C	
Outdoor Air Inlet Temperature	DB	35.0 °C	7.0 °C
	WB		6.0 °C

Piping Lenght: 7.5 meters; Piping Lift: 0 metres.
DB: Dry Bulb; WB: Wet Bulb

2. The Sound Pressure Level is based on following conditions:
   - 1 m from the front surface of the unit. 1.5 m from floor level.
   - Voltage of the power source 400V.
   - The above data was measured in an anaechoic chamber so that reflected sound should be taken into consideration when installing the unit.
   - In case of Night Shift conditions, the noise level decreases 5 dB (A).

◆ RAS-20~32FSN

MODEL RAS			RAS-20 FSN	RAS-22 FSN	RAS-24 FSN	RAS-26 FSN	RAS-28 FSN	RAS-30 FSN	RAS-32 FSN
Electrical power supply			3~400V, 50 Hz						
Nominal Cooling Capacity		kW	56.00	63.80	69.00	73.00	80.00	85.00	90.00
Nominal Heating Capacity		kW	63.00	71.00	77.50	82.50	90.00	95.00	100.00
Coefficient of performance (COP)		-	3.72	3.57	3.80	3.63	3.77	3.62	3.67
Energy efficiency rate (EER)		-	3.19	3.14	3.09	2.98	2.98	2.83	2.85
Colour (Munsell Code)		-	Natural Grey (1.0Y8.5/0.5)						
Sound Pressure Level (night mode)		dB (A)	62/(57)	63/(58)	62/(57)	62/(57)	63/(58)	63/(58)	63/(58)
Outer Dimensions	Height	mm	1745	1745	1745	1745	1745	1745	1745
	Width	mm	1910	1910	2430	2430	2430	2430	2430
	Depht	mm	750	750	750	750	750	750	750
Net weight		Kg	535	535	675	675	720	720	720
Refrigerant		-	R410A						
Flow Control		-	Micro processor Controlled Expansion Valve						
Compressor		-	Hermetic (Scroll)						
	Q´ty	-	1+3	1+3	1+4	1+4	1+5	1+5	1+5
	Horse power	kW	1.4+4.4×3	1.8+4.4×3	1.4+4.4×4	1.8+4.4×4	1.4+4.4×5	1.4+4.4×5	1.4+4.4×5
Heat exchanger			Flare-Nut and/or Flange Connection (Factory supplied)						
Condenser Fan		-	Propeller Fan						
	Q´ty	-	2	2	2	2	2	2	2
	OT Air Flow Rate	m³/min	344	344	382	382	382	382	382
	Horse power	W	380+275	380+275	380+275	380+275	380+275	380+275	380+275
Connections			Flare-Nut and/or Flange Connection (Factory supplied)						
Refrigeration Piping	Liquid Pipe	mm (inches)	Ø15.88 (5/8)	Ø15.88 (5/8)	Ø15.88 (5/8)	Ø19.05 (3/4)	Ø19.05 (3/4)	Ø19.05 (3/4)	Ø19.05 (3/4)
	Gas pipe	mm (inches)	Ø28.6 (1-1/8)	Ø28.6 (1-1/8)	Ø28.6 (1-1/8)	Ø31.75 (1-1/4)	Ø31.75 (1-1/4)	Ø31.75 (1-1/4)	Ø31.75 (1-1/4)
Refrigerant Charge		Kg	19.0	19.0	23.0	24.0	25.0	26.0	26.0
Maximum electrical power consumption		A	37.0	42.0	50.0	54.0	59.0	66.0	70.0
Packing Measurement		m³	2.82	2.82	3.57	3.57	3.57	3.57	3.57

OD: Outer Diameter

NOTE:

1. The nominal cooling and heating capacity is the combined capacity of the SET FREE system, and is based on JIS 158616.

Operation condition		Cooling	Heating
Indoor Air Inlet Temperature	DB	27.0 °C	20.0 °C
	WB	19.0 °C	
Outdoor Air Inlet Temperature	DB	35.0 °C	7.0 °C
	WB		6.0 °C

Piping Lenght: 7.5 meters; Piping Lift: 0 metres.
DB: Dry Bulb; WB: Wet Bulb

2. The Sound Pressure Level is based on following conditions:
   - 1 meter from the frontal surface of the unit. 1.5 meters from floor level.
   - Voltage of the power source is 400V
   - The data above was measured in an anaechoic chamber so that reflected sound should be taken into consideration when installing the unit.
   - In case of Night Shift conditions, the noise level decreases 5 dB (A).
   - The COP and EER have been calculated with RCI-FSN1E model units.

2.2.2. RAS – FXN(E) Outdoor Units

◆ RAS-8~18FXN(E)

MODEL RAS			RAS-8FXN(E)	RAS-10FXN(E)	RAS-12FXN(E)	RAS-16FXN	RAS-18FXN
Electrical power supply			3~400V, 50 Hz				
Nominal Cooling Capacity		kW	22.40	28.00	33.50	45.00	50.00
Nominal Heating Capacity		kW	25.00	31.50	37.50	50.00	56.00
Coefficient of performance (COP)			3.99	3.46	3.53	3.69	3.43
Energy efficiency rate (EER)			3.21	3.18	3.01	3.32	3.04
Colour (Munsell Code)			Natural Grey (1.0Y8.5/0.5)				
Sound Pressure Level (night mode)		dB (A)	56/(51)	58/(53)	60/(55)	62/(57)	62/(57)
Outer Dimensions	Height	mm	1745	1745	1745	1745	1745
	Width	mm	950	950	980	1914	1914
	Depht	mm	750	750	780	750	780
Net weight		Kg	295	305	305	527	570
Refrigerant		-	R410A				
Flow Control		-	Expansion Valve for Micro processor Control				
Compressor			Hermetic (Scroll)				
	Q´ty	-	1+1	1+1	1+1	1+2	1+2
	Horse power	kW	1.8+3.7	2.3+4.4	3.7+4.4	3.0+4.4×2	3.7+4.4x2
Heat exchanger			Multi-Pass Cross-Finned Tube				
Condenser Fan			Propeller Fan				
	Q´ty		1	1	1	2	2
	OT Air Flow Rate	m³/min	138	172	172	210	344
	Horse power	W	380	380	380	380	380
Connections			Flare-Nut and/or Flange Connection (Factory supplied)				
Refrigeration Piping	Liquid Pipe	mm (inches)	Ø9.53 (3/8)	Ø9.53 (3/8)	Ø12.70 (1/2)	Ø12.70 (1/2)	Ø15.88 (5/8)
	Gas (Low) Line	mm (inches)	Ø19.05 (3/4)	Ø22.2 (7/8)	Ø25.40 (1)	Ø28.6 (1-1/80)	Ø28.6 (1-1/80)
	Gas (High) Line	mm (inches)	Ø15.88 (5/8)	Ø19.05 (3/4)	Ø19.05 (3/4)	Ø22.20 (7/8)	Ø22.20 (7/8)
Refrigerant Charge		Kg	8.5	9.5	10.0	19.0	19.0
Maximum electrical power consumption		A	14.0	17.0	21.0	30.0	32.0
Packing Measurement		m³	1.44	1.44	1.44	2.82	2.82

NOTE:

1. The nominal cooling and heating capacity is the combined capacity of the SET FREE system, and is based on JIS 158616.

Operation condition		Cooling	Heating
Indoor Air Inlet Temperature	DB	27.0 °C	20.0 °C
	WB	19.0 °C	
Outdoor Air Inlet Temperature	DB	35.0 °C	7.0 °C
	WB		6.0 °C

Piping Lenght: 7.5 meters; Piping Lift: 0 metres.
DB: Dry Bulb; WB: Wet Bulb

2. The Sound Pressure Level is based on following conditions:
   - 1 meter from the frontal surface of the unit. 1.5 meters from floor level.
   - Voltage of the power source is 400V.
   - The above data was measured in an anaechoic chamber so that reflected sound should be taken into consideration when installing the unit.
   - In case of Night Shift conditions, the noise level decreases 5 dB (A).
   - The COP and EER have been calculated with RCI-FS1NE model units.

◆ RAS-20~32FXN

MODEL RAS			RAS-20FXN	RAS-22FXN	RAS-24FXN	RAS-26FXN	RAS-30FXN	RAS-32FXN
Electrical power supply			3~400V, 50 Hz					
Nominal Cooling Capacity		kW	56.00	63.00	69.00	73.00	85.00	90.00
Nominal Heating Capacity		kW	63.00	71.00	77.50	82.80	95.00	100.00
Coefficient of performance (COP)			3.61	3.33	3.57	3.32	3.40	3.41
Energy efficiency rate (EER)			3.19	2.93	3.08	2.75	2.83	2.67
Colour (Munsell Code)			Natural Grey (1.0Y8.5/0.5)					
Sound Pressure Level (night mode)		dB (A)	62/(57)	63/(58)	62/(57)	63/(58)	63/(58)	63/(58)
Outer Dimensions	Height	mm	1745	1745	1745	1745	1745	1745
	Width	mm	1914	1914	2430	2430	2430	2430
	Depht	mm	750	750	750	750	750	750
Net weight		Kg	570	570	712	712	755	755
Refrigerant		-	R410A					
Flow Control		-	Expansion Valve for Micro processor Control					
Compressor			Hermetic (Scroll)					
	Q´ty		1+3	1+3	1+4	1+4	1+5	1+5
	Horse power	kW	1.8+4.4×3	1.8+4.4×3	1.4+4.4×4	1.4+4.4×4	1.4+4.4×5	1.4+4.4×5
Heat exchanger			Multi-Pass Cross-Finned Tube					
Condenser Fan			Propeller Fan					
	Q´ty		2	2	2	2	2	2
	OT Air Flow Rate	m³/min	172+172	172+172	210+172	210+172	210+172	210+172
	Horse power	W	380+275	380+275	380+275	380+275	380+275	380+275
Connections			Flare-Nut and/or Flange Connection (Factory supplied)					
Refrigeration Piping	Liquid Pipe	mm (inches)	Ø15.88 (5/8)	Ø15.88 (5/8)	Ø15.88 (5/8)	Ø19.05 (3/4)	Ø19.05 (3/4)	Ø19.05 (3/4)
	Gas (Low) Line	mm (inches)	Ø28.6 (1-1/8)	Ø28.6 (1-1/8)	Ø28.6 (1-1/8)	Ø31.75 (1-1/4)	Ø31.75 (1-1/4)	Ø31.75 (1-1/4)
	Gas (High) Line	mm (inches)	Ø22.2 (7/8)	Ø25.4 (1)	Ø25.4 (1)	Ø25.4 (1)	Ø28.6 (1-1/8)	Ø28.6 (1-1/8)
Refrigerant Charge		Kg	19.0	19.0	26.0	26.0	26.0	26.0
Maximum electrical power consumption		A	34.0	42.0	45.0	54.0	61.0	70.0
Packing Measurement		m³	2.82	2.82	3.57	3.57	3.57	3.57

NOTE:

1. The nominal cooling and heating capacity is the combined capacity of the SET FREE system, and is based on JIS 158616.

Operation condition		Cooling	Heating
Indoor Air Inlet Temperature	DB	27.0 °C	20.0 °C
	WB	19.0 °C	
Outdoor Air Inlet Temperature	DB	35.0 °C	7.0 °C
	WB		6.0 °C

Piping Lenght: 7.5 meters; Piping Lift: 0 metres.
DB: Dry Bulb; WB: Wet Bulb

2. The Sound Pressure Level is based on following conditions:
   - 1 meter from the frontal surface of the unit. 1.5 meters from floor level.
   - Voltage of the power source is 400V.
   - The above data was measured in an anaechoic chamber so that reflected sound should be taken into consideration when installing the unit.
   - In case of Night Shift conditions, the noise level decreases 5 dB (A).
   - The COP and EER have been calculated with RCI-FS1NE model units.

2.2.3. RAS – FSVN(E) Outdoor Units

MODEL RAS			RAS-3FSVNE	RAS-4FSVNE	RAS-5FSVNE
Electrical power supply			1~230V, 50 Hz		
Nominal Cooling Capacity		kW	8.00	11.20	14.00
Nominal Heating Capacity		kW	9.00	12.50	16.00
Coefficient of performance (COP)			3.59	3.87	3.78
Energy efficiency rate (EER)			3.54	3.53	3.45
Colour (Munsell Code)			Grey (1.0Y8.5/0.5)		
Sound Pressure Level (night mode)		dBA	45/(41)	47(43)	49(45)
Outer Dimensions	Height	mm	800	1240	1240
	Width	mm	850	950	950
	Depht	mm	315	315	315
Net weight		Kg	66	98	102
Refrigerant		-	R410A		
Flow Control		-	Expansion Valve for Micro processor Control		
Compressor	Type		Hermetic (Scroll)		
	Q´ty	-	1	1	1
	Horse power	kW	1.7	2.2	3.0
Heat exchanger			Multi-Pass Cross-Finned Tube		
Condenser Fan	Type		Propeller Fan		
	Q´ty	-	1	2	2
	OT Air Flow Rate	m³/min	52	88	99
	Horse power	W	50	50+70	50+70
Refrigeration Piping			Flare-Nut and/or Flange Connection (Factory supplied)		
	Liquid Pipe	mm (inches)	Ø9.53 (3/8)	Ø9.53 (3/8)	Ø9.53 (3/8)
	Gas pipe	mm (inches)	Ø15.88 (5/8)	Ø15.88 (5/8)	Ø15.88 (5/8)
Refrigerant Charge		Kg	1.75	2.8	3.0
Maximum electrical power consumption		A	25	32	32
Packing Measurement		m³	0.34	0.55	0.55

NOTE:

1. The nominal cooling and heating capacity is the combined capacity of the SET FREE system, and is based on JIS 158616.

Operation condition		Cooling	Heating
Indoor Air Inlet Temperature	DB	27.0 °C	20.0 °C
	WB	19.0 °C	
Outdoor Air Inlet Temperature	DB	35.0 °C	7.0 °C
	WB		6.0 °C

Piping Lenght: 7.5 meters; Piping Lift: 0 metres.
DB: Dry Bulb; WB: Wet Bulb

2. The Sound Pressure Level is based on following conditions:
   - 1 meter from the frontal surface of the unit. 1.5 meters from floor level.
   - Voltage of the power source is 230V.
   - The above data was measured in an anaechoic chamber so that reflected sound should be taken into consideration when installing the unit.
   - In case of Night Shift conditions, the noise level decreases 4 dB (A).
   - The COP and EER have been calculated with a system with two RCI-FS1NE model units.

2.3. Complementary systems

2.3.1 Total Heat Exchanger KPI

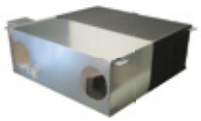

MODEL KPI			KPI-2521	KPI-5021	KPI-8021	KPI-10021
OT Air Flow Rate	HI	m³/min	4.1	8.3	13.3	16.6
	Med		4.1	8.3	13.3	16.6
	Low		2.75	5.8	11.1	14.5
External Pressure	HI	mmAq	6.5	15	14	16
	Med		4	6	10	10
	Low		2	3	7	8
Temperature Exchange Efficiency	HI	%	78	77	78	79
	Med		78	77	78	79
	Low		83	82	80.5	81
Enthalpy Exchange Efficiency for Heating	HI	%	69	67	71	70
	Med		69	67	71	70
	Low		74	73	73	73
Enthalpy Exchange Efficiency for Cooling	HI	%	62.5	61.5	64.5	64.5
	Med		62.5	61.5	64.5	64.5
	Low		68	68	68	67
Sound Pressure Level (Overall A Scale)	HI	dB (A)	26.5 – 27.5	32.5 – 33.5	33.5 – 34.5	36 – 37
	Med		25 – 26	30 – 31	32 – 33	34 – 35
	Low		21 – 22	23.5 – 24.5	30 – 31	31.5 – 32.5
Outer Dimensions	Height	mm	275	317	398	398
	Width		735	1016	1004	1231
	Depht		780	888	1164	1164
Net weight		Kg	21	33	61	72
Packing Measurement		m³	0.26	0.46	0.70	0.84

NOTE:

1. Use it under the following conditions: KPI-8021: 2.9 mmAq or more, KPI-10021: 4.9 mmAq or more
2. The Sound Pressure Level is based on following conditions:
   - 1.5 meters below the unit.
   - The above data was measured in an anaechoic chamber so that reflected sound should be taken into consideration when installing the unit.
3. Condition: as designed in Eurovent procedures for sound testing.

In case of the bypass ventilation mode, the noise level is increased by approx. 1 dB (A).

2.3.2. Econofresh Kit

ECONOFRESH KIT MODEL			EF-5GE
Combined Indoor Unit Model			RPI-5HP
Outer Dimensions	Height	mm	254
	Width		1350 + 59
	Depht		270
Net weight		Kg	12.5
Damper Motor Quantity		-	1
Approximate Packing Measurement		m^3	0.13
Standard Accesories		-	Fresh Outdoor Air Inlet Thermistor

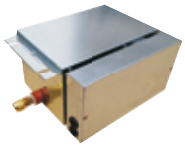

2.3.3. No.0 Group

MODEL CH_UNIT			CH-4.0NE	CH-8.0NE	CH-12.0N
Nominal Capacity		HP	HP<4	4≤HP≤8	8<HP≤12
Nº Max of I/D Unit		-	4	8	5
Electrical consumption		W	32		
Sound Pressure Level (Overall A Scale)		dB (A)	43	43	44
Outer Dimensions	Height	mm	197	197	197
	Width	mm	345	345	345
	Depht	mm	299	299	299
Net weight		Kg	10	10	11
Refrigerant		-	R410A (Nitrogen charged in Factory for Corrosion-Resistance)		
Connections Refrigerant Piping		-	Flare-Nut and/or Flange Connection (Factory supplied)		
Refrigerant Piping (From Outdoor Unit)	Liquid Pipe	mm(in)	-		
	Gas (Low) ine	mm(in)	Ø15.88 (5/8)	Ø19.05 (3/4	Ø22.2(7/8)
	Gas (High) Line	mm(in)	Ø12.70 (1/2)	Ø15.88 (5/8)	Ø19.05 (3/4
Refrigerant Piping (From IndoorUnit)	Liquid Pipe	mm(in)	-		
	Gas (Low) ine	mm(in)	Ø15.88 (5/8)	Ø19.05 (3/4	Ø22.2(7/8)

2.4. Component Data for Indoor Units

The components data indicated are the following:

- Indoor Unit: Heat Exchanger and Fan unit:
  - RCI - 4-way cassette type
  - RCIM - 4-way cassette type
  - RCD - 2-way cassette type
  - RPC - Ceiling Type
  - RPI - In-the-Ceiling Type
  - RPK - Wall Type
  - RPF - Floor Type
  - RPFI - Floor Concealed Type
- Outdoor Unit: Heat Exchanger, Fan unit and Compressor

2.4.1. RCI – 4-Way Cassette Type

Model RCI				RCI-1.0 FSN1E	RCI-1.5 FSN1E	RCI-2.0 FSN1E	RCI-2.5 FSN1E	RCI-3.0 FSN1E	RCI-3.5 FSN1E	RCI-4.0 FSN1E	RCI-5.0 FSN1E	RCI-6.0 FSN1E
Heat exchanger	Heat Exchanger Type			Multi-Pass Cross-Finned Tube								
	Piping	Material		Copper Tube								
		Outer Diameter	Ø mm	7	7	7	7	7	7	7	7	7
		Rows	-	1	1	2	2	2	2	3	3	3
		Number of Tube/Coil	-	8	8	16	16	20	20	30	30	30
	Fin	Material		Aluminum								
		Pitch	mm	1.5	1.5	1.5	1.5	1.5	1.5	1.5	1.5	1.5
	Maximum Operation Pressure		MPa	4.15	4.15	4.15	4.15	4.15	4.15	4.15	4.15	4.15
	Total Face Area		m²	0.38	0.38	0.38	0.38	0.47	0.47	0.47	0.47	0.47
	Number of Coil/Unit		-	1	1	1	1	1	1	1	1	1
Fan Unit	Fan	Type		Multi-Blade Turbo Fan								
		Number/Unit	-	1	1	1	1	1	1	1	1	1
		Outer Diameter	mm	490	490	490	490	490	490	490	490	490
		Nominal Air Flow (Hi/mme/Lo)	m^3/min	13/12/11	15/14/12	16/14/12	20/17/15	26/23/20	26/23/20	32/28/24	34/29/25	37/32/27
	Compressor	Type		Drip-Proof Type Enclosure								
		Starting method		DC Control								
		Horse power	W	56	56	56	56	56	56	108	108	108
		Q´ty	-	1	1	1	1	1	1	1	1	1
		Insulation Class	-	E	E	E	E	E	E	E	E	E

2.4.2. RCIM – 4-Way Cassette Type

Model RCI				RCIM1.0 FSN	RCIM-1.5 FSN	RCIM-2.0 FSN
Heat exchanger	Heat Exchanger Type			Multi-Pass Cross-Finned Tube		
	Piping	Material		Copper Tube		
		Outer Diameter	Ømm	7	7	7
		Rows	-	2	2	2
		Number of Tube/Coil	-	14	14	14
	Fin	Material		Aluminum		
		Pitch	mm	1.5	1.5	1.5
	Maximum Operation Pressure		MPa	4.15	4.15	4.15
	Total Face Area		m²	0.19	0.19	0.19
	Number of Coil/Unit		-	1	1	1
Fan Unit	Fan	Type		Multi-Blade Turbo Fan		
		Number/Unit	-	1	1	1
		Outer Diameter	mm	298	298	298
		Nominal Air Flow (Hi/mme/Lo)	m³/min	13/12/11	15/13.5/12	16/14/12
	Compressor	Type		Drip-Proof Type Enclosure		
		Starting method		DC Control		
		Horse power	W	52	52	52
		Q´ty	-	1	1	1
		Insulation Class	-	E	E	E

2.4.3. RCD – 2-Way Cassette Type

Model RCD				RCD-1.0 FSN	RCD-1.5 FSN	RCD-2.0 FSN	RCD-2.5 FSN	RCD-3.0 FSN	RCD-4.0 FSN	RCD-5.0 FSN
Heat exchanger	Heat Exchanger Type			Multi-Pass Cross-Finned Tube						
	Piping	Material		Copper Tube						
		Outer Diameter	Ømm	7	7	7	7	7	7	7
		Rows		1	1	2	2	2	2	2
	Fin	Material		Aluminum						
		Pitch	mm	1.6	1.6	1.6	1.6	1.6	1.6	1.6
	Maximum Operation Pressure		MPa	4.15	4.15	4.15	4.15	4.15	4.15	4.15
	Total Face Area		m²	0.36	0.36	0.36	0.36	0.36	0.63	0.63
	Number of Coil/Unit		-	1	1	1	1	1	1	1
Fan Unit	Fan	Type	-	Multi-Blade Turbo Fan						
		Number/Unit	-	1	1	1	1	1	2	2
		Outer Diameter	mm	360	360	360	360	360	360	360
		Air Flow Rate (ratio/Lo)	m³/min	8/7/6	12/10/8.5	15/13/11	19/16/14	22/19/16	28/24/21	34/29/25
	Compressor	Type	-	Drip-Proof Type Enclosure						
		Starting method	-	DC Control						
		Horse power	W	35	35	35	55	55	35x2	35x2
		Q´ty	-	1	1	1	1	1	2	2
		Insulation Class	-	E	E	E	E	E	E	E

2.4.4. RPC – Ceiling Type

Model RPC				RPC-2.0FSNE	RPC-2.5FSNE	RPC-3.0FSNE	RPC–3.5FSNE	RPC-4.0FSNE	RPC-5.0FSNE	RPC–6.0FSNE
Heat exchanger	Heat Exchanger Type		-	Multi-Pass Cross-Finned Tube						
	Piping	Material	-	Copper Tube						
		Outer Diameter	Ømm	9.53	9.53	9.53	9.53	9.53	9.53	9.53
		Rows	-	3	3	3	3	3	3	3
		Number of Tube/Coil	-	20	20	20	20	32	32	32
	Fin	Material	-	Aluminum						
		Pitch	mm	2	2	2	2	2	2	2
	Maximum Operation Pressure		MPa	4.15	4.15	4.15	4.15	4.15	4.15	4.15
	Total Face Area		m²	0.137	0.176	0.176	0.176	0.277	0.347	0.347
	Number of Coil/Unit		-	1	1	1	1	1	1	1
Fan Unit	Fan	Type	-	Multi-Blade Centrigugal Fan						
		Number/Unit	-	3	3	4	3	3	4	4
		Outer Diameter	Ømm	101	101	101	101	136	136	136
		Flow rate (Hi/Me/Lo)	m³/min	15/13/10	18/16/12	21/17/15	23/20/16	30/24/19	35/28/21	37/32/37
	Compressor	Type	-	Drip-Proof Type Enclosure						
		Starting method	-	Permanent Split Capacitor						
		Horse power	W	75	75	75	75	145	145	145
		Q´ty	-	1	1	1	1	1	1	1
		Insulation Class	-	B	B	B	B	B	B	B

2.4.5. RPI – Duct Type (RPI-0.8~6.0FSN1E)

Model RPI				RPI-0.8 FSN1E	RPI-1.0 FSN1E	RPI-1.5 FSN1E	RPI-2.0 FSN1E	RPI-2.5 FSN1E	RPI-3.0 FSN1E	RPI-3.5 FSN1E	RPI-4.0 FSN1E	RPI-5.0 FSN1E	RPI-6.0 FSN1E
Heat exchanger	Heat Exchanger Type		-	Multi-Pass Cross-Finned Tube									
	Piping	Material	-	Copper Tube									
		Outer Diameter	Ømm	9,53	9,53	9,53	9,53	9,53	9,53	9,53	9,53	9,53	9,53
		Rows	-	2	2	3	2	3	3	3	3	3	3
		Number of Tube/Coil	-	14	14	20	20	30	30	30	30	30	30
	Fin	Material	-	Aluminum									
		Pitch	mm	2	2	2	2	2	2	2	2	2	2
	Maximum Operation Pressure		MPa	4,15	4,15	4,15	4,15	4,15	4,15	4,15	4,15	4,15	4,15
	Total Face Area		m²	0,12	0,12	0,12	0,21	0,21	0,21	0,21	0,21	0,21	0,21
	Number of Coil/Unit		-	1	1	1	1	1	1	1	1	1	1
Fan Unit	Fan	Type	-	Multi-Blade Centrigugal Fan									
		Number/Unit	-	2	2	2	2	2	2	2	2	2	
		Outer Diameter	Ømm	136	136	136	180	180	180	180	180	180	180
		Air Flow Rate (ratio/Lo)	m³/min	8/7	8/7	10/9	16/13	19/15	22/17	22/17	30/28	35/31	36/32
	Compressor	Type	-	Drip-Proof Type Enclosure									
		Starting method	-	Permanent Split Capacitor									
		Horse power	W	40	40	55	65	150	150	150	225	225	385
		Q´ty		1	1	1	1	1	1	1	1	1	1
		Insulation Class		F	F	B	B	B	F	F	B	B	F

2.4.6. RPI – Duct Type (RPI-8.0~10.0FSNE)

Model RPI				RPI-8.0 FSNE	RPI-10.0 FSNE
Heat exchanger	Heat Exchanger Type		-	Multi-Pass Cross-Finned Tube	
	Piping	Material	-	Copper Tube	
		Outer Diameter	Ømm	9.53	9.53
		Rows	-	3	4
		Number of Tube/ Coil	-	20	20
	Fin	Material	-	Aluminum	
		Pitch	mm	12	12
	Maximum Operation Pressure		MPa	4.15	4.15
	Total Face Area		m²	0.12	0.12
	Number of Coil/Unit		-	0.6	0.6
Fan Unit	Fan	Type	-	Multi-Blade Centrigugal Fan	
		Number/Unit	-	1	1
		Outer Diameter	Ømm	240	240
		Air Flow Rate (ratio/Lo)	m³/min	66/58	75/67
	Compressor	Type	-	Drip-Proof Type Enclosure	
		Starting method	-	Permanent Split Capacitor	
		Horse power	W	1250	1250
		Q´ty		1	1
		Insulation Class		F	F

2

2.4.7. RPK – Mural Type (RPK-0.8~4.0FSNM)

Model RPK				RPK-0.8 FSNM	RPK-1.0 FSNM	RPK-1.5 FSNM	RPK-2.0 FSNM	RPK-2.5 FSNM	RPK-3.0 FSNM	RPK-3.5 FSNM	RPK-4.0 FSNM
Heat exchanger	Heat Exchanger Type		-	Multi-Pass Cross-Finned Tube							
	Piping	Material	-	Copper Tube							
		Outer Diameter	Ømm	7	7	7	7	7	7	7	7
		Rows	-	2	2	2	2	2	2	2	2
	Fin	Material	-	Aluminum							
		Pitch	mm	1.2	1.2	1.2	1.2	1.4	1.4	1.4	1.4
	Maximum Operation Pressure		MPa	4.15	4.15	4.15	4.15	4.15	4.15	4.15	4.15
	Total Face Area		m²	0.26	0.26	0.26	0.26	0.35	0.35	0.35	0.35
	Number of Coil/Unit		-	1	1	1	1	1	1	1	1
Fan Unit	Fan	Type	-	Tangencial Fan							
		Number/Unit	-	1	1	1	1	1	1	1	1
		Outer Diameter	Ømm	100	100	100	100	130	130	130	130
		Air Flow Rate (ratio/Lo)	m³/min	11/9/8	11/9/8	13/11/9	14/12/10	22/18/15	22/18/15	26/24/20	26/24/20
	Compressor	Type	-	Drip-Proof Type Enclosure							
		Starting method	-	DC Control							
		Horse power	W	20	20	20	20	40	40	41	41
		Q´ty	-	1	1	1	1	1	1	1	1
		Insulation Class	-	E	E	E	E	E	E	E	E

2.4.8. RPK – Mural Type (RPK-1.0~1.5FSN1M)

Model RPK				RPK-0.8 FSN1M	RPK-1.5 FSN1M
Heat exchanger	Heat Exchanger Type		-	Multi-Pass Cross-Finned Tube	
	Piping	Material	-	Copper Tube	
		Outer Diameter	Ømm	7	7
		Rows	-	2	2
	Fin	Material	-	Aluminum	
		Pitch	mm	1.3	1.3
	Maximum Operation Pressure		MPa	4.15	4.15
	Total Face Area		m²	0.2	0.2
	Number of Coil/Unit		-	1	1
Fan Unit	Fan	Type	-	Tangencial Fan	
		Number/Unit	-	1	1
		Outer Diameter	Ømm	100	100
		Air Flow Rate (ratio/Lo)	m³/min	10/8/7	11/10/9
	Compressor	Type	-	Drip-Proof Type Enclosure	
		Starting method	-	DC Control	
		Horse power	W	20	20
		Q´ty	-	1	1
		Insulation Class	-	E	E

2.4.9. RPF – Floor Type & RPFI – Floor Concealed Type

Model RPF and RPFI				RPF-1.0	RPF-1.5	RPF-2.0	RPF-2.5	RPFI-1.0	RPFI-1.5	RPFI-2.0	RPFI-2.5
Heat exchanger	Heat Exchanger Type		-	Multi-Pass Cross-Finned Tube							
	Piping	Material	-	Copper Tube							
		Outer Diameter	Ømm	9.53	9.53	9.53	9.53	9.53	9.53	9.53	9.53
		Rows	-	2	2	2	3	2	2	2	3
		Number of Tube/Coil	-	18	18	18	24	18	18	18	24
	Fin	Material	-	Aluminum							
		Pitch	mm	2	2	2	2	2	2	2	2
	Maximum Operation Pressure		MPa	4.15	4.15	4.15	4.15	4.15	4.15	4.15	4.15
	Total Face Area		m²	0.15	0.15	0.21	0.21	0.15	0.15	0.21	0.21
	Number of Coil/Unit		-	1	1	1	1	1	1	1	1
Fan Unit	Fan	Type	-	Multi-Blade Centrigugal Fan							
		Number/Unit	-	2	2	2	2	2	2	2	2
		Outer Diameter	Ømm	136	136	136	136	136	136	136	136
		Air Flow Rate (ratio/Lo)	m³/min	8.5/7/6	12/10/9	16/14/11	16/14/11	8.5/7/6	12/10/9	16/14/11	16/14/11
	Compressor	Type	-	Drip-Proof Type Enclosure							
		Starting method	-	Permanent Split Capacitor							
		Horse power	W	20	28	45	45	20	28	45	45
		Q´ty	-	1	1	1	1	1	1	1	1
		Insulation Class	-	E	E	B	B	E	E	B	B

2.4.10. Fan and Exchanger of Outdoor Units (RAS-5~18FSN(E))

Outdoor Units Model				RAS-5FSN	RAS-8FSN(E)	RAS-10FSN(E)	RAS-12FSN(E)	RAS-14FSN	RAS - 16FSN	RAS-18FSN
Heat exchanger	Heat Exchanger Type		-	Multi-Pass Cross-Finned Tube						
	Piping	Material	-	Copper Tube						
		Outer Diameter	Ømm	9.53	9.53	9.53	9.53	9.53	9.53	9.53
		Rows	-	2	2	2	2	2	2	2
		No. of Tubes/Coil	-	112	112	112	112	112	112	112
	Fin	Material	-	Aluminum						
		Pitch	mm	2	2	2	2	2	2	2
	Maximum Operation Pressure		MPa	4.15	4.15	4.15	4.15	4.15	4.15	4.15
	Total Face Area		m²	1.20	1.65	2.03	2.03	2.03	2.40	2.40
	Number of Coil/Unit		-	1	1	1	1	1	1	1
Fan Unit	Fan	Type	-	Propeller Fan						
		Number/Unit	-	1	1	1	1	1	1	1
		Outer Diameter	mm	544	644	644	644	644	644	644
		Revolutions	rpm	765	795	885	885	885	990	990
		Nominal Air Flow/Fan	m³/min	87	138	172	172	172	210	210
	Compressor	Type	-	Drip-Proof Type Enclosure						
		Starting method	-	DC Control						
		Horse power	W	160	380	380	380	380	380	380
		Q´ty	-	1	1	1	1	1	1	1
		Insulation Class	-	E	E	E	E	E	E	E
Compressor	Inverter type		-	E405AHD-36D2	E405AHD-36D2	E405AHD-36D2	E405AHD-36D2	E405AHD-36D2	E405AHD-36D2	E405AHD-36D2
	Fixed type		-	-	E505DH-49D2Y	E505DH-49D2Y	E505DH-49D2Y	E505DH-49D2Y	E605DH-59D2Yx2	E605DH-59D2Yx2

2.4.11. Fan and Exchanger of Outdoor Units (RAS-20~32FSN)

Outdoor Units Model				RAS - 20FSN	RAS-22FSN	RAS - 24FSN	RAS-26FSN	RAS-28FSN	RAS - 30FSN	RAS-32FSN
Heat exchanger	Heat Exchanger Type		-	Multi-Pass Cross-Finned Tube						
	Piping	Material	-	Copper Tube						
		Outer Diameter	Ømm	9.53	9.53	9.53	9.53	9.53	9.53	9.53
		Rows	-	2	2	2	2	2	2	2
		No. of Tubes/Coil	-	112	112	112	112	112	112	112
	Fin	Material	-	Aluminum						
		Pitch	mm	2	2	2	2	2	2	2
	Maximum Operation Pressure		MPa	4.15	4.15	4.15	4.15	4.15	4.15	4.15
	Total Face Area		m²	4.06	4.06	4.79	4.79	4.79	4.79	4.79
	Number of Coil/Unit		-	2	2	2	2	2	2	2
Fan Unit	Fan	Type	-	Propeller Fan						
		Number/Unit	-	2	2	2	2	2	2	2
		Outer Diameter	mm	644	644	644	644	644	644	644
		Revolutions	rpm	915/838	915/838	990/830	990/830	990/830	990/830	990/830
		Nominal Air Flow/Fan	m³/min	344	344	382	382	382	382	382
	Compressor	Type	-	Drip-Proof Type Enclosure						
		Starting method	-	DC Control						
		Horse power	W	380/275	380/275	380/275	380/275	380/275	380/275	380/275
		Q´ty	-	2	2	2	2	2	2	2
		Insulation Class	-	E	E	E	E	E	E	E
Compressor	Inverter type		-	E405AHD-36D2	E405AHD-36D2	E405AHD-36D2	E405AHD-36D2	E405AHD-36D2	E405AHD-36D2	E405AHD-36D2
	Fixed type		-	E605DH-59D2Yx3	E605DH-59D2Yx3	E605DH-65D2Yx4	E655DH-49D2Yx4	E605DH-49D2Yx5	E655DH-65D2Yx5	E655DH-65D2Yx5

2.4.12. Fan and Exchanger of Outdoor Units (RAS-8~18FXN(E))

Outdoor Units Model				RAS-8FXN(E)	RAS-10FXN(E)	RAS-12FXN(E)	RAS-16FXN	RAS-18FXN
Heat exchanger	Heat Exchanger Type		-	Multi-Pass Cross-Finned Tube				
	Piping	Material	-	Copper Tube				
		Outer Diameter	Ømm	9.53	9.53	9.53	9.53	9.53
		Rows	-	2	2	2	2	2
		No. of Tubes/Coil	-	112	112	112	112	112
	Fin	Material	-	Aluminum				
		Pitch	mm	2	2	2	2	2
	Maximum Operation Pressure		MPa	4.15	4.15	4.15	4.15	4.15
	Total Face Area		m²	1.65	2.03	2.03	2.40	2.40
	Number of Coil/Unit		-	1	1	1	1	1
Fan Unit	Fan	Type	-	Propeller Fan				
		Number/Unit	-	1	1	1	1	1
		Outer Diameter	mm	644	644	644	644	644
		Revolutions	rpm	795	885	885	915/838	915/838
		Nominal Air Flow/Fan	m³/min	138	172	172	344	344
	Compressor	Type	-	Drip-Proof Type Enclosure				
		Starting method	-	DC Control				
		Horse power	W	380	380	380/275	380/275	380/275
		Q´ty	-	1	1	1	1	1
		Insulation Class	-	E	E	E	E	E
Compressor	Inverter type		-	E405AHD-36D2Y	E405AHD-36D2Y	E405AHD-36D2Y	E405AHD-36D2Y	E405AHD-36D2Y
	Fixed type		-	E505DH-49D2Y	E605DH-59D2Y	E655DH-59D2Y	E605DH-59D2Yx2	E505DH-59D2Yx3

2.4.13. Fan and Exchanger of Outdoor Units (RAS-20~32FXN)

Outdoor Units Model				RAS-20FXN	RAS-22FXN	RAS-24FXN	RAS-26FXN	RAS-30FXN	RAS-32FXN
Heat exchanger	Heat Exchanger Type		-	Multi-Pass Cross-Finned Tube					
	Piping	Material	-	Copper Tube					
		Outer Diameter	Ømm	9.53	9.53	9.53	9.53	9.53	9.53
		Rows	-	2	2	2	2	2	2
		No. of Tubes/Coil	-	112	112	112	112	112	112
	Fin	Material	-	Aluminum					
		Pitch	mm	2	2	2	2	2	2
	Maximum Operation Pressure		MPa	4.15	4.15	4.15	4.15	4.15	4.15
	Total Face Area		m²	4.06	4.06	4.79	4.79	4.79	4.79
	Number of Coil/Unit		-	2	2	2	2	2	2
Fan Unit	Fan	Type	-	Propeller Fan					
		Number/Unit	-	2	2	2	2	2	2
		Outer Diameter	mm	644	644	644	644	644	644
		Revolutions	rpm	915/838	915/838	990/830	990/830	990/830	990/830
		Nominal Air Flow/Fan	m³/min	344	344	382	382	382	382
	Compressor	Type	-	Drip-Proof Type Enclosure					
		Starting method	-	DC Control					
		Horse power	W	380/275	380/275	380/275	380/275	380/275	380/275
		Q´ty	-	2	2	2	2	2	2
		Insulation Class	-	E	E	E	E	E	E
Compressor	Inverter type		-	E405AHD-36D2Y	E405AHD-36D2Y	E405AHD-36D2Y	E405AHD-36D2Y	E405AHD-36D2Y	E405AHD-36D2Y
	Fixed type		-	E605DH-59D2Yx3	E655DH-59D2Yx3	E655DH-59D2Yx4		E605DH-65D2Yx5	E655DH-65D2Yx5

2.4.14. Fan and Exchanger of Outdoor Units (RAS-3~5FSVNE)

Outdoor Units Model				RAS-3FSVNE	RAS-4FSVNE	RAS-5FSVNE
Heat exchanger	Heat Exchanger Type		-	Multi-Pass Cross-Finned Tube		
	Piping	Material	-	Copper Tube		
		Outer Diameter	Ømm	7	7	7
		Rows	-	2	2	2
		Number of Tube/Coil	-	76	116	116
	Fin	Material	-	Aluminum		
		Pitch	mm	1.9	1.9	1.9
	Maximum Operation Pressure		MPa	4.15	4.15	4.15
	Total Face Area		m²	0.64	1.00	1.00
	Number of Coil/Unit		-	1	1	1
Fan Unit	Fan	Type	-	Multi-Blade Centrigugal Fan		
		Number/Unit	-	1	2	2
		Outer Diameter	mm	465	465	465
		Revolutions	rpm	678	601/665	689/725
		Nominal Air Flow/Fan	m³/min	45	80	90
	Compressor	Type	-	Drip-Proof Type Enclosure		
		Starting method	-	Permanent Split Capacitor		
		Horse power	W	50	30+50	50+70
		Q´ty	-	1	2	2
		Insulation Class	-	E	E	E
Compressor	Inverter type		-	2YC63BXD	EK405AHD-36A1	EK405AHD-36A1

2.4.15. Compressor

Model			2YC63BXD	EK405AHD-36A1	E405AHD-36D2(Y)	E505DH49-D2Y	E605DH-59D2Y	E655DH-65D2Y
Compressor type			Rotary type	Hermetic Scroll				
Air Tight Pressure	Load Down	MPa	4.15	4.15	4.15	4.15	4.15	4.15
	Suction	MPa	2.21	2.21	2.21	2.21	2.21	2.21
Motor Type	Starting method	-	Inverter-Driven (I.D.)			Direct-on-Line		
	Poles	-	2	4	4	2	2	2
	Insulation Class	-	E	E	E	E	E	E
Oil Type		-	FVC68D					
Q´ty		(L)	0.75	2.0	0.5	0.5	0.5	0.5

HITACHI
Inspire the Next

3. Dimensions Data

This chapter shows the dimension characteristics and the minimum installation space required for each unit of the Hitachi SET FREE FSN(E) / FXN(E) series.

Contents

3. Dimensions Data 81

3.1. Indoor Units 82

3.1.1. 4-Way Type Model 82
3.1.2. 2-Way Type Model 84
3.1.3. Ceiling Type Model 86
3.1.4. Duct Type Model 90
3.1.5. Wall Type Model 94
3.1.6. Floor Type Model 97
3.1.7. Floor Concealed Type Model. 98

3.2. Outdoor Units 99

3.2.1. FSN(E) / FXN(E) – Set Free Series 99
3.2.2. Set Free Mini Series – FSVNE 104

3.3. Complementary Units 106

3.3.1. Total Heat Exchanger 106
3.3.2. Econofresh Kit 107

3.4. Accessories 108

3.4.1. CH-Box 108

3.1. Indoor Units

3.1.1. 4-Way Type Model

◆ **RCI-1.0~6.0FSN1E / P-G23WA2**

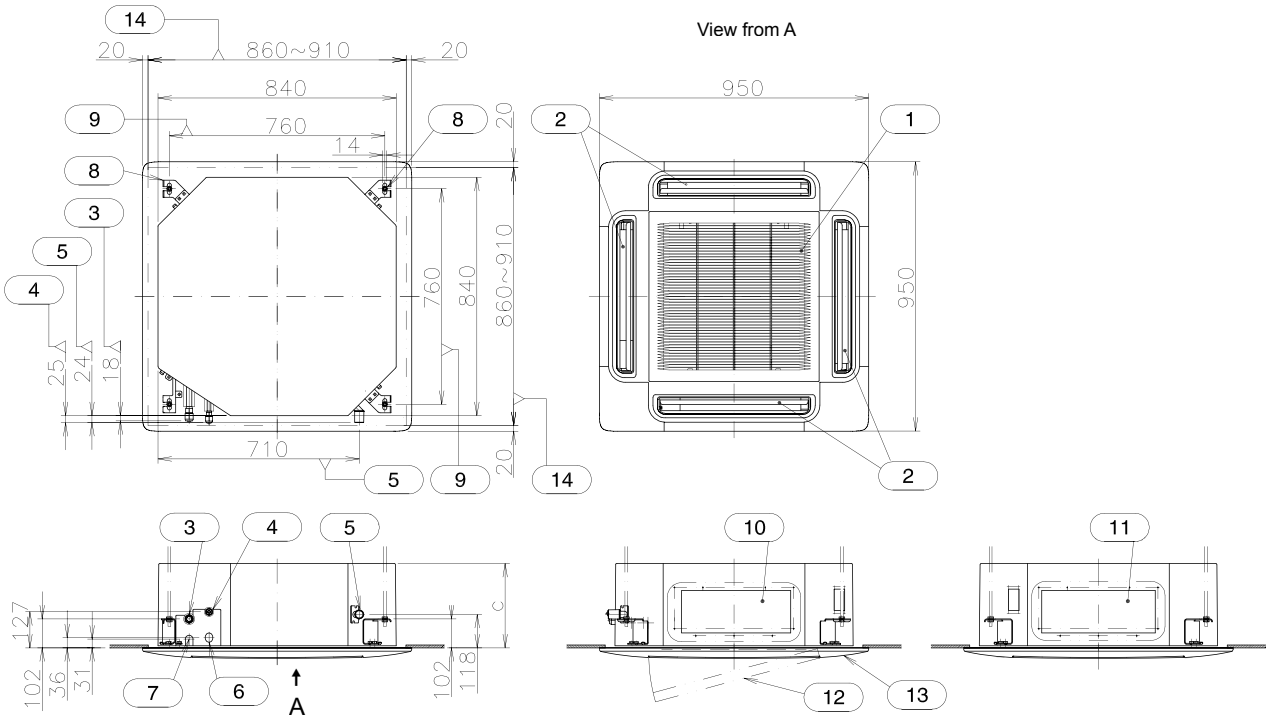

Installation space

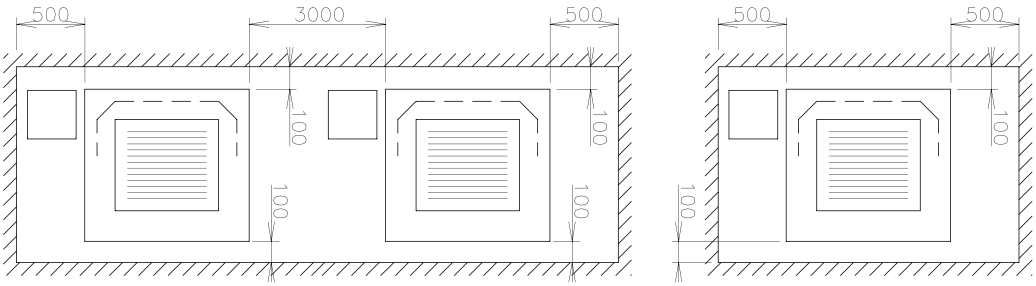

Units in: mm

No.	Content	Remarks
1	Air Intake	
2	Air Outlet	4-way
3	Refrigerant Gas Line	Flare nut: Øa
4	Refrigerant Liquid Line	Flare nut: Øb
5	Drain pipe	Ø32 (outer)
6	Wiring hole of	Ø32.5 (Knockout Hole)
7	Wiring hole of	30x39
8	Bracket to suspend the machine	
9	Suspension bolt	4-M10 or W3/8
10	Connecting Supply Air Duct	150x385 (Knock-Out Hole)
11	Connecting Supply Air Duct	150x400 (Knock-Out Hole)
12	Grille / Filter	
13	Panel	P-G23WA2
14	Opening required in the ceiling	

Model	control	b	c.
RCI-1.0	Ø12.7	Ø6.35	248
RCI-1.5	Ø12.7	Ø6.35	248
RCI-2.0	Ø15.88	Ø6.35	248
RCI-2.5	Ø15.88	Ø9.53	248
RCI-3.0	Ø15.88	Ø9.53	298
RCI-3.5	Ø15.88	Ø9.53	298
RCI-4.0	Ø15.88	Ø9.53	298
RCI-5.0	Ø15.88	Ø9.53	298
RCI-6.0	Ø15.88	Ø9.53	298

◆ **RCIM-1.0~2.0FSN / P-N23WAM**

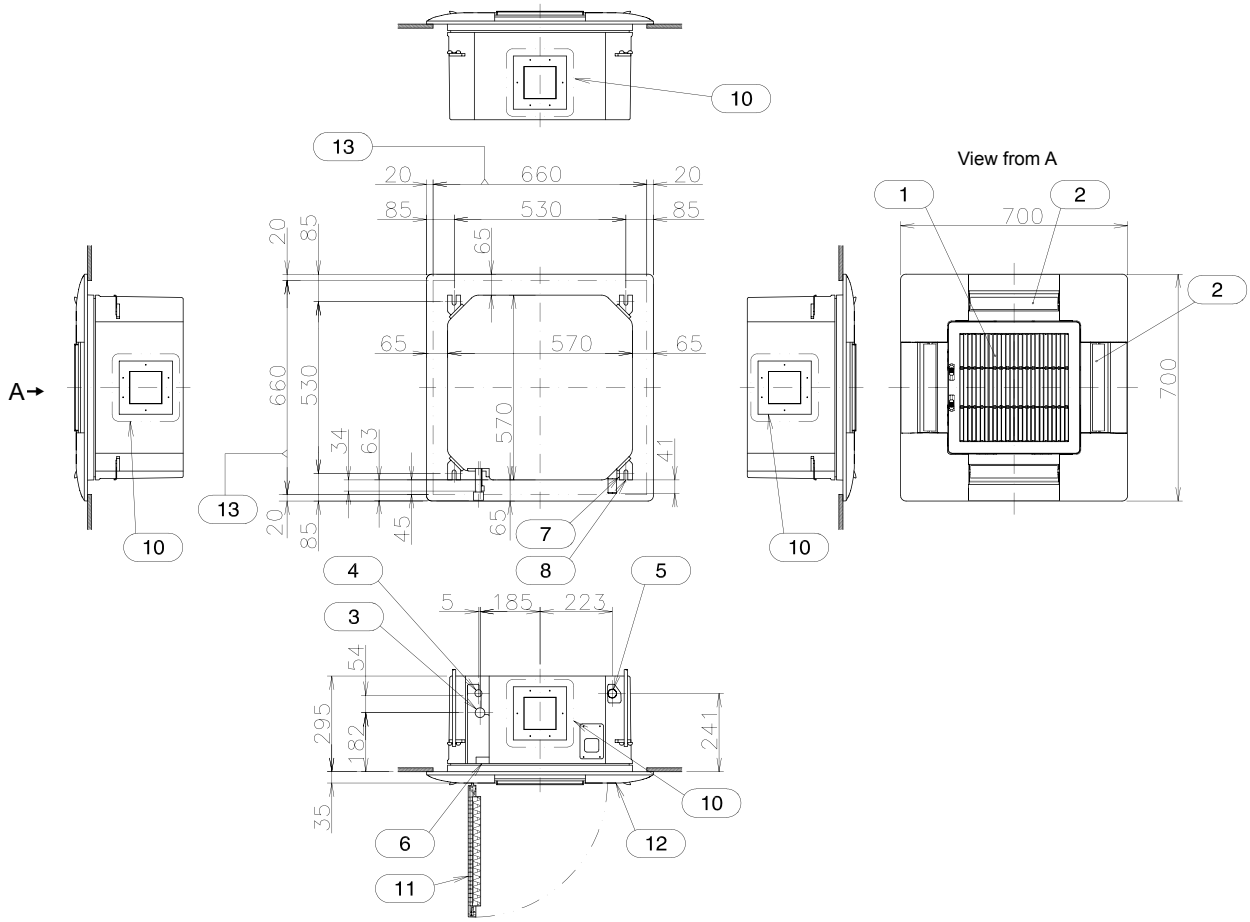

Installation space

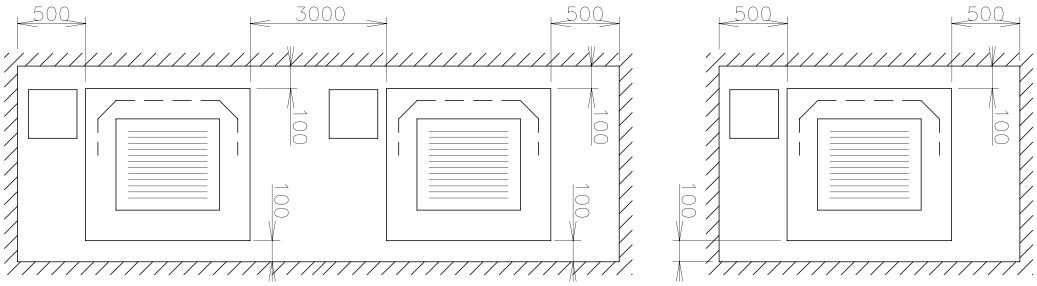

Units in: mm

No.	Content	Remarks
1	Air Intake	
2	Air Outlet	4-way
3	Refrigerant Gas Line	Flare nut: Øa
4	Refrigerant Liquid Line	Flare nut: Øb
5	Drain pipe	Ø32 (outer)
6	Wiring hole of	
7	Bracket to suspend the machine	
8	Suspension bolt	4-M10 o W3/8
9	Grille / Filter	
10	Connecting Supply Air Duct	
11	Grille / Filter	
12	Panel	P-N23WAM
13	Opening required in the ceiling	

Model	control	b
RCIM-1.0	Ø12.7	Ø6.35
RCIM-1.5	Ø12.7	Ø6.35
RCIM-2.0	Ø15.88	Ø6.35

3.1.2. 2-Way Type Model

◆ **RCD-1.0~3.0FSN / P-G23WA1**

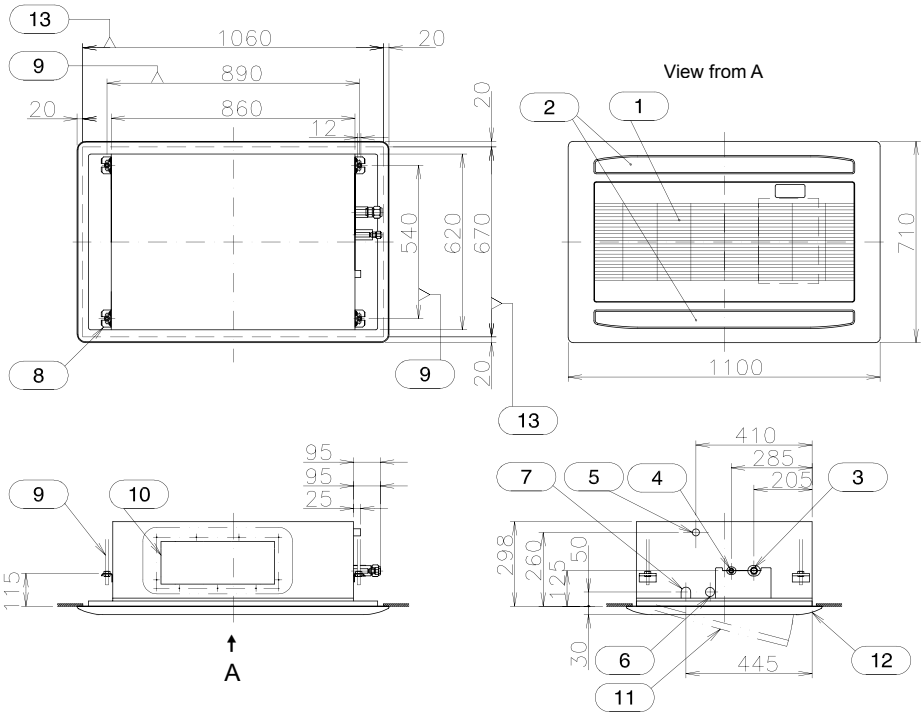

Installation Space

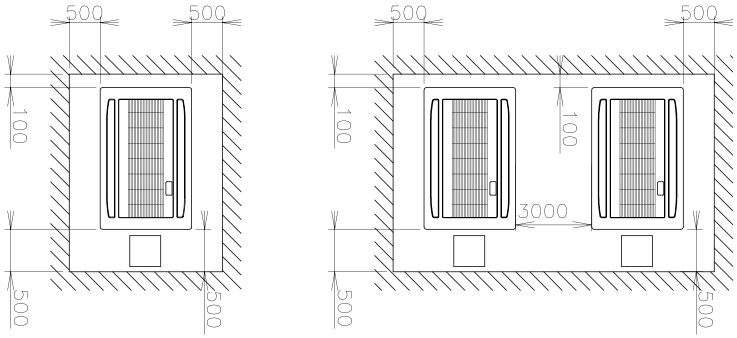

Units in: mm

No.	Content	Remarks
1	Air Intake	
2	Air Outlet	2-way
3	Refrigerant Gas Line	Flare nut: Øa
4	Refrigerant Liquid Line	Flare nut: Øb
5	Drain pipe	Ø32 (outer)
6	Wiring hole of	Ø32.5 (Knockout Hole)
7	Wiring hole of	36x39
8	Bracket to suspend the machine	
9	Suspension bolt	
10	Connecting Supply Air Duct	150x430 (Knock-Out Hole)
11	Grille / Filter	
12	Panel	P-G23WA1
13	Opening required in the ceiling	

Model	control	b
RCD-1.0	Ø12.7	Ø6.35
RCD-1.5	Ø12.7	Ø6.35
RCD-2.0	Ø15.88	Ø6.35
RCD-2.5	Ø15.88	Ø9.53
RCD-3.0	Ø15.88	Ø9.53

3

◆ **RCD-4.0/5.0FSN1E / P-G46WA1**

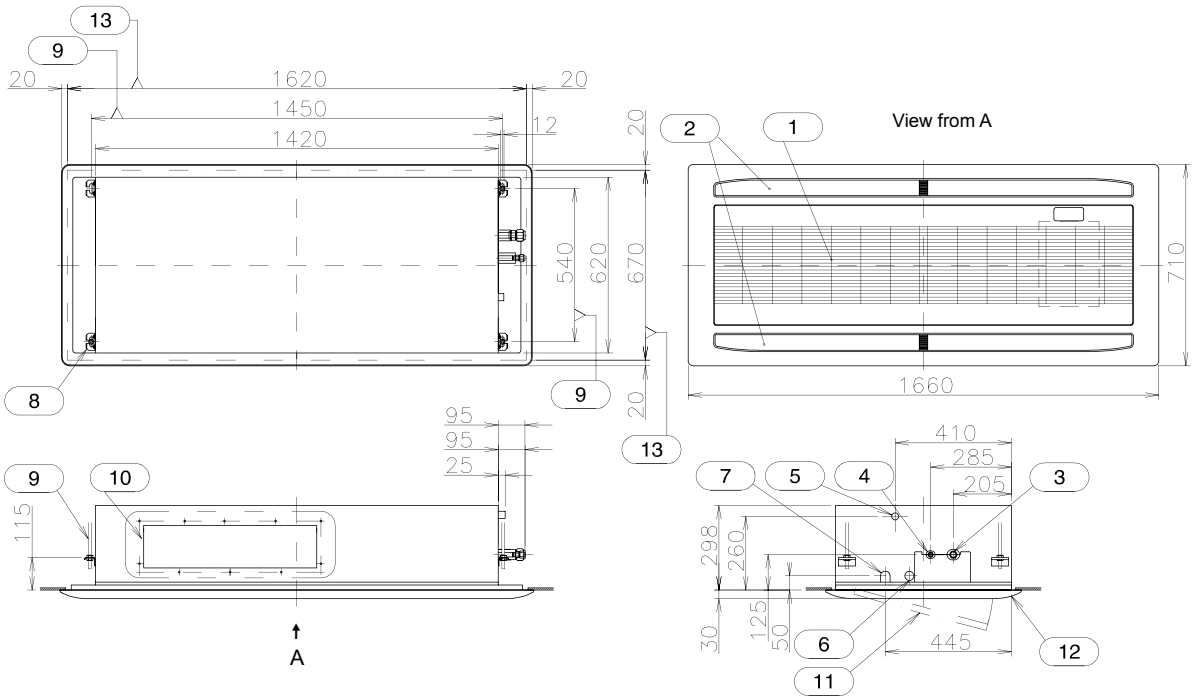

Installation Space

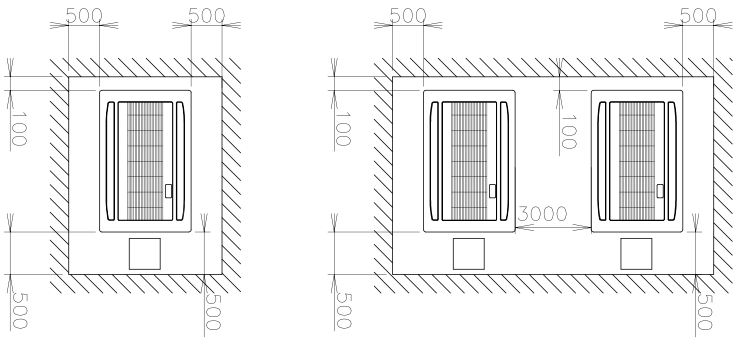

Units in: mm

No.	Content	Remarks
1	Air Intake	
2	Air Outlet	2-way
3	Refrigerant Gas Line	Flare nut: Ø15.88
4	Refrigerant Liquid Line	Flare nut: Ø9.53
5	Drain pipe	Ø32 (outer)
6	Wiring hole of	Ø32.5 (Knockout Hole)
7	Wiring hole of	36x39
8	Bracket to suspend the machine	
9	Suspension bolt	
10	Connecting Supply Air Duct	150x640 (Knock-Out Hole)
11	Grille / Filter	
12	Panel	P-G46WA1
13	Opening required in the ceiling	

3.1.3. Ceiling Type Model

◆ **RPC-2.0FSNE**

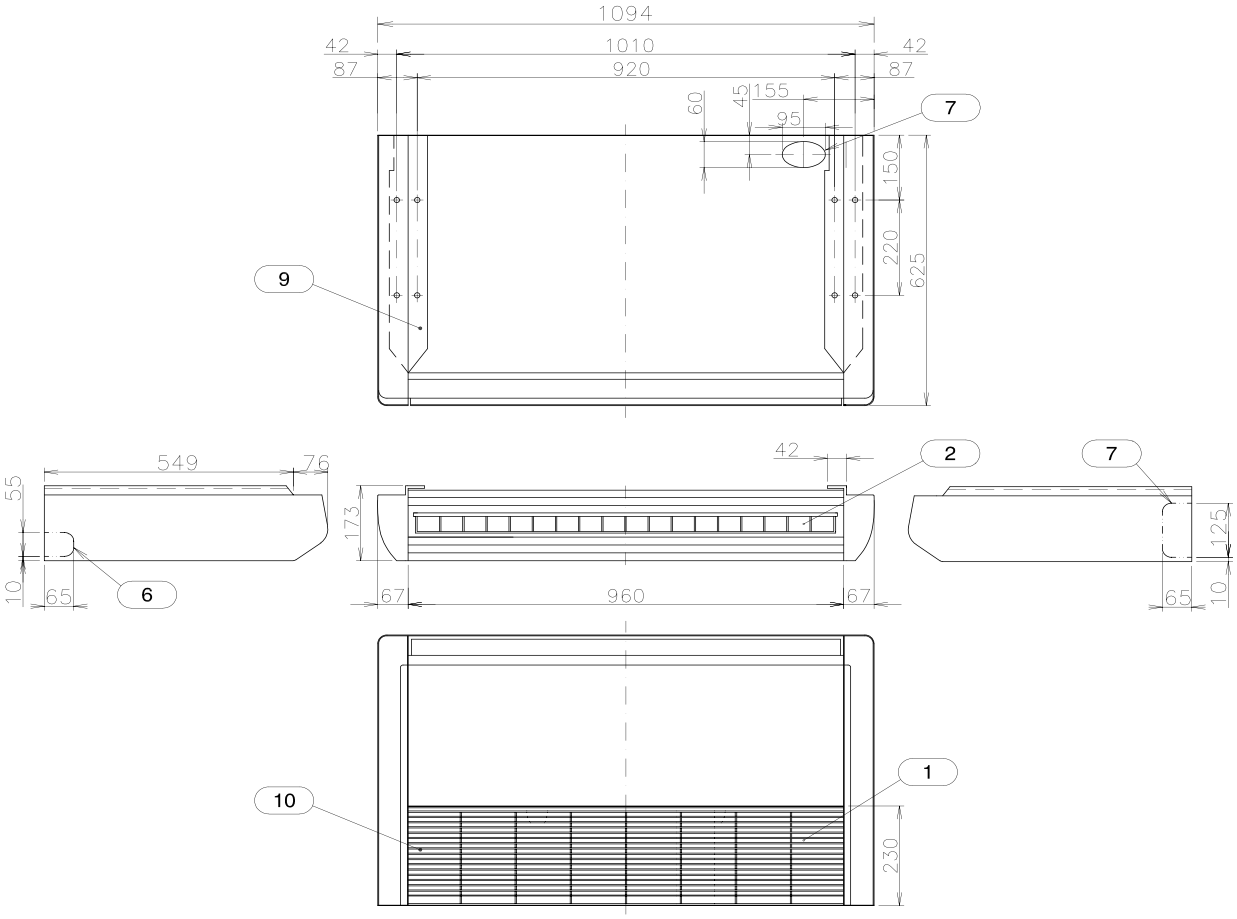

Piping Connection Arrangement

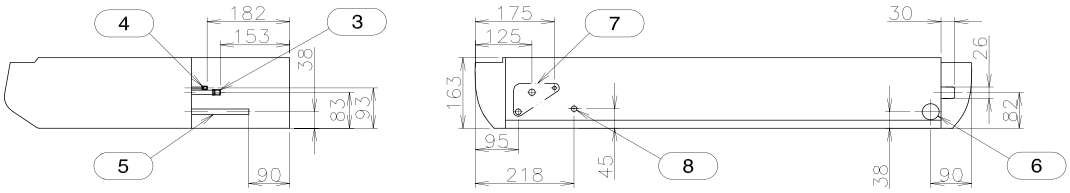

Installation space

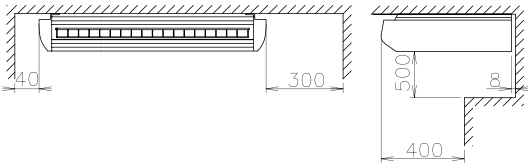

Units in: mm

No.	Content	Remarks
1	Air Intake	
2	Air Outlet	
3	Refrigerant Gas Line	Flare nut: Ø15.88
4	Refrigerant Liquid Line	Flare nut: Ø6.35
5	Drain pipe	Ø25 (outer)
6	Hole for drain	Ø32.5 (Knockout Hole)
7	Hole for Refrigerant piping	
8	Wiring hole of	
9	Bracket to suspend the machine	
10	Grille / Filter	

◆ **RPC-2.5~3.5FSNE**

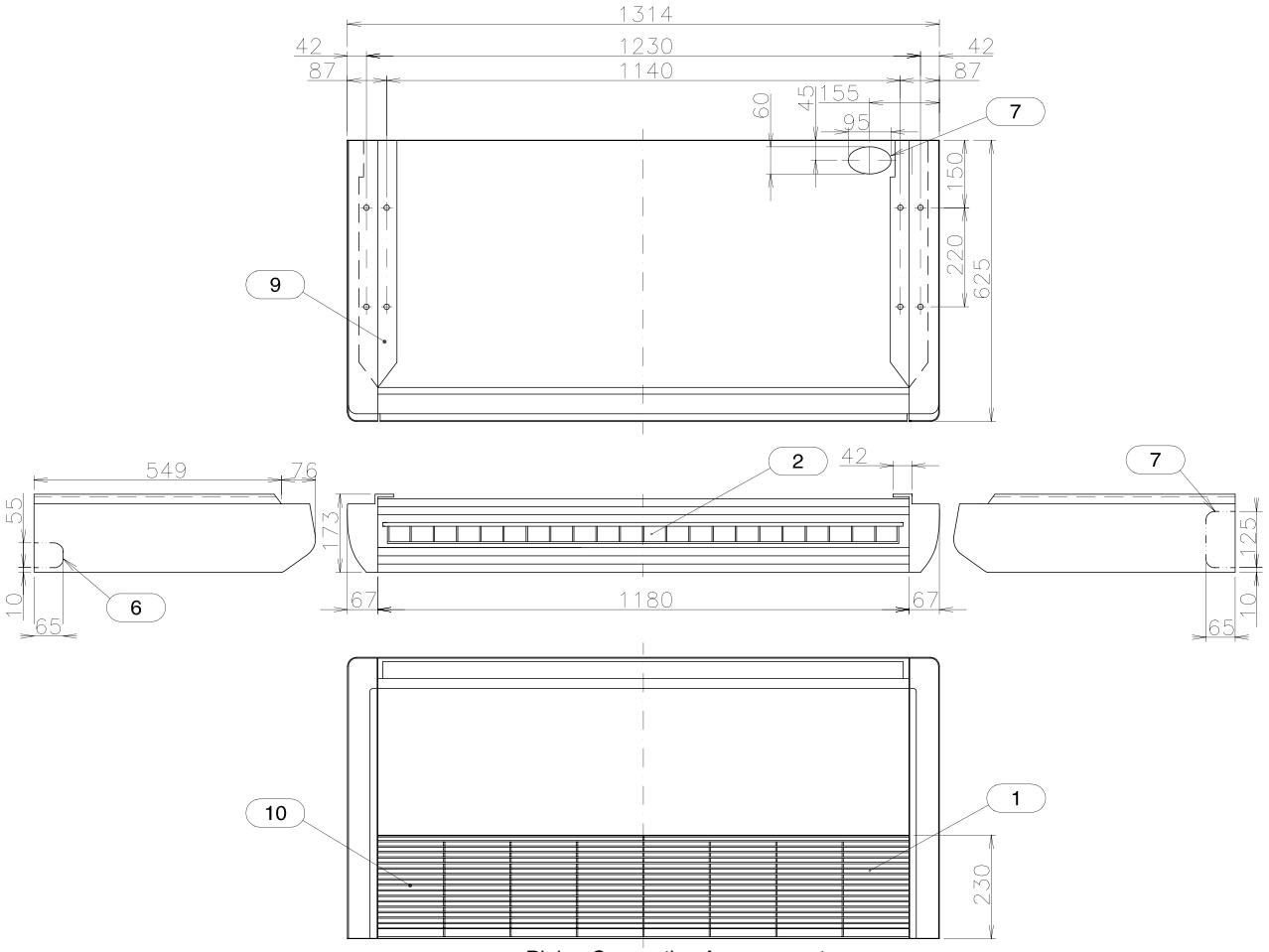

Piping Connection Arrangement

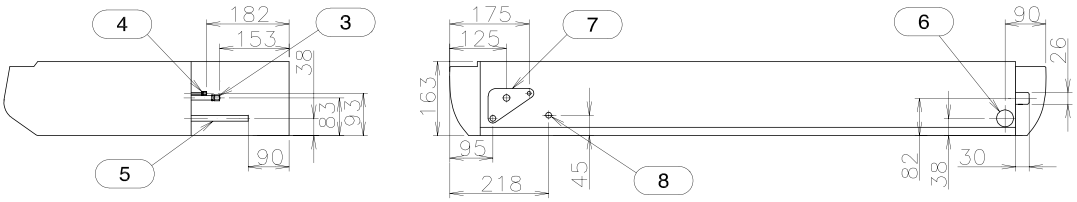

Installation space

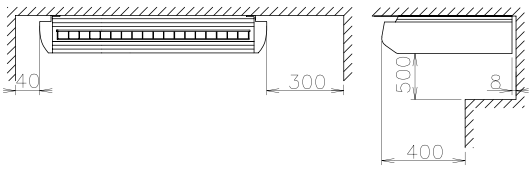

Units in: mm

No.	Content	Remarks
1	Air Intake	
2	Air Outlet	
3	Refrigerant Gas Line	Flare nut: Ø15.88
4	Refrigerant Liquid Line	Flare nut: Ø9.53
5	Drain pipe	Ø25 (outer)
6	Hole for drain	Ø32.5 (Knockout Hole)
7	Hole for Refrigerant piping	
8	Wiring hole of	
9	Bracket to suspend the machine	
10	Grille / Filter	

HITACHI
Inspire the Next

◆ RPC-4.0FSNE

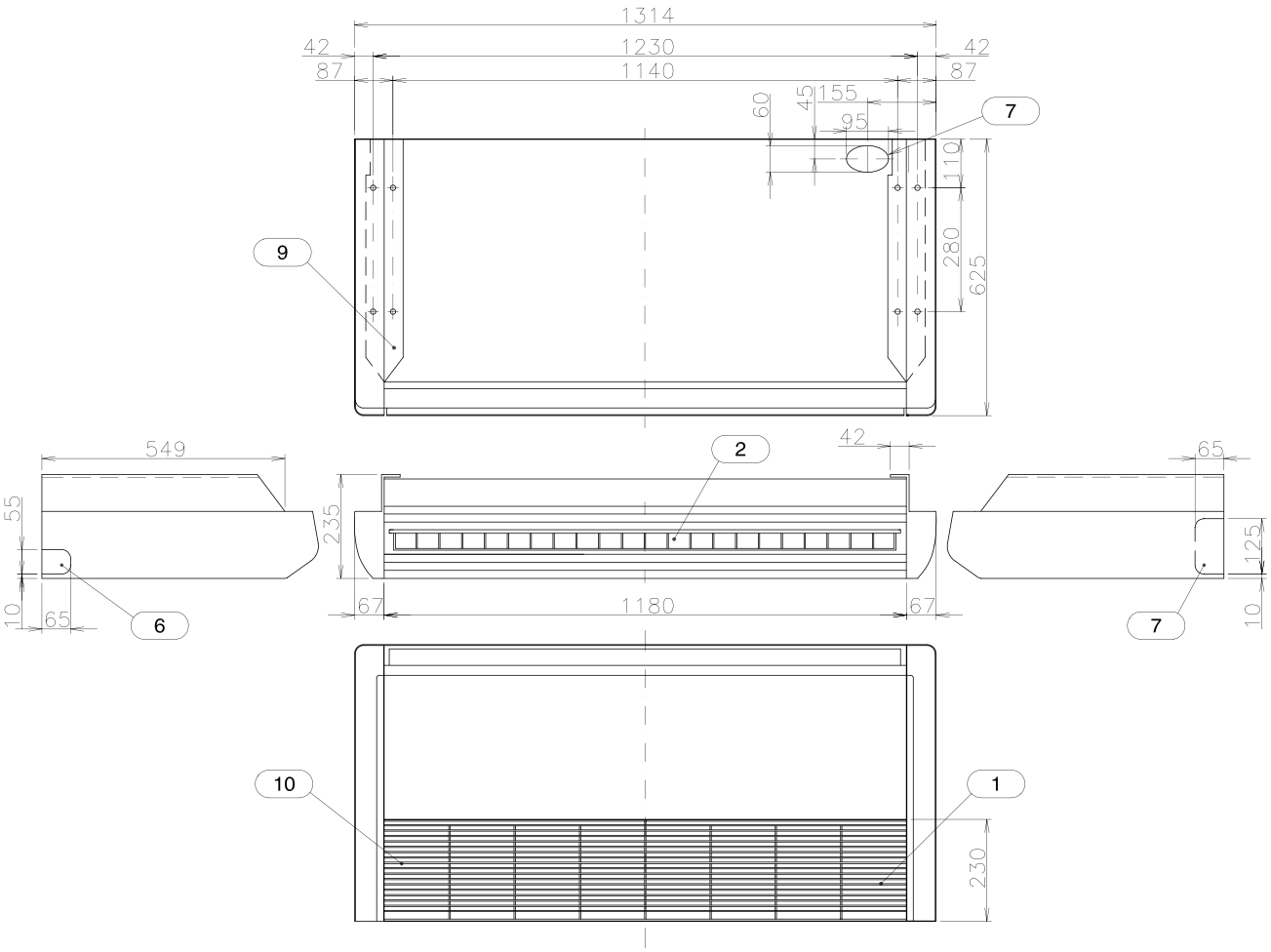

Piping Connection Arrangement

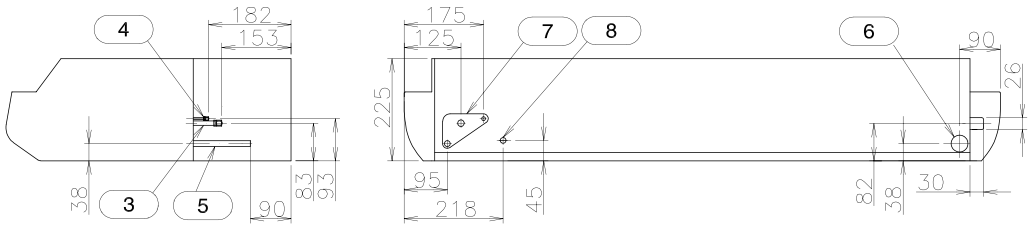

Installation space

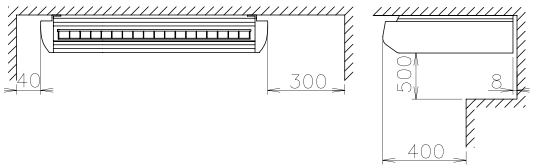

Units in: mm

No.	Content	Remarks
1	Air Intake	
2	Air Outlet	
3	Refrigerant Gas Line	Flare nut: Ø15.88
4	Refrigerant Liquid Line	Flare nut: Ø9.53
5	Drain pipe	Ø25 (outer)
6	Hole for drain	Ø32.5 (Knockout Hole)
7	Hole for Refrigerant piping	
8	Wiring hole of	
9	Bracket to suspend the machine	
10	Grille / Filter	

◆ RPC-5.0/6.0FSNE

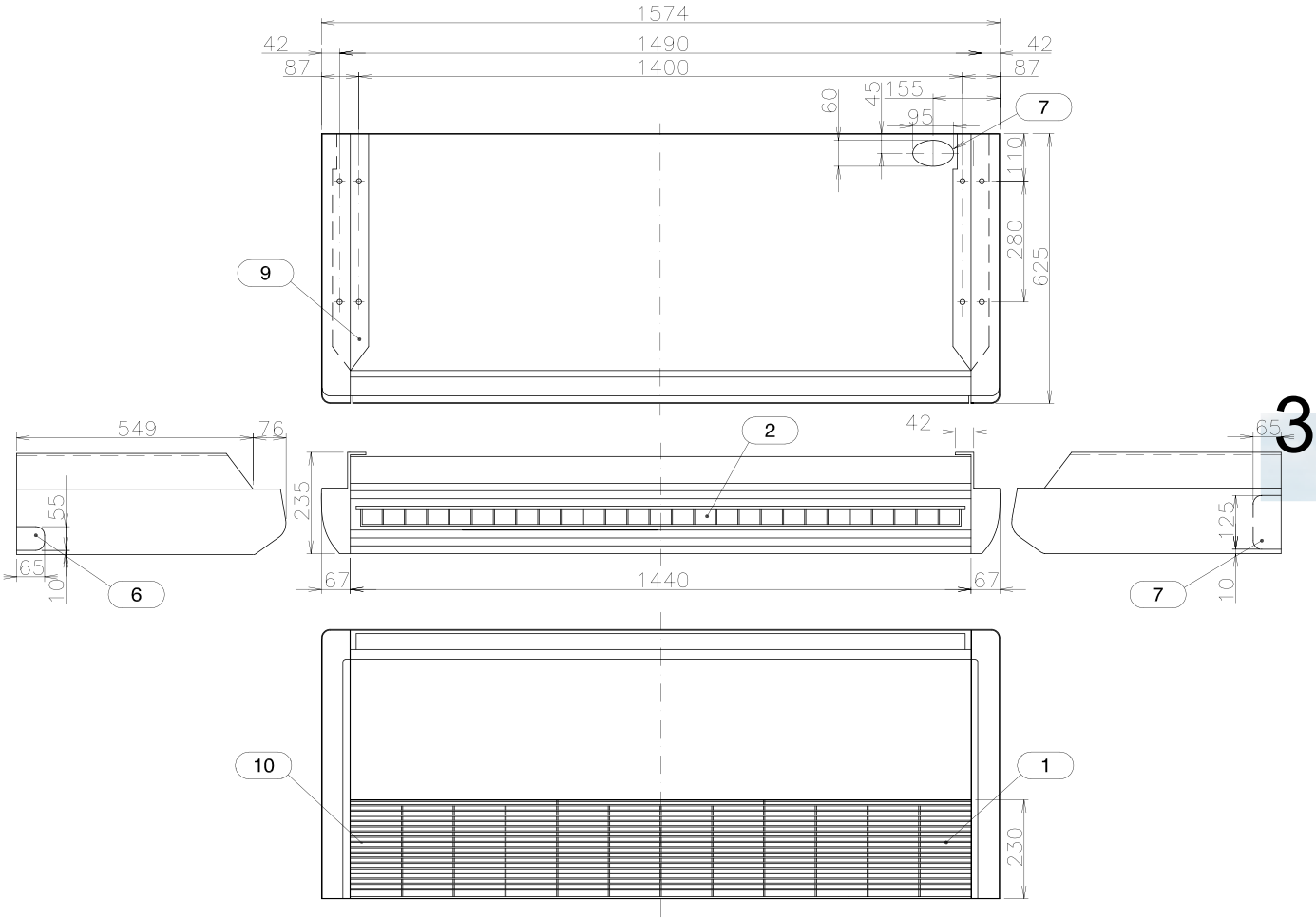

Piping Connection Arrangement

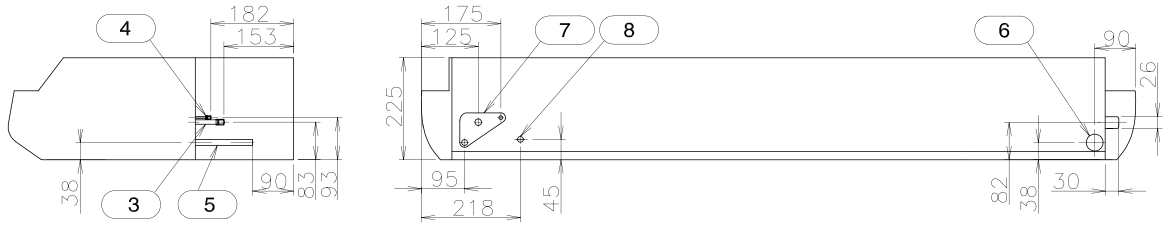

Installation space

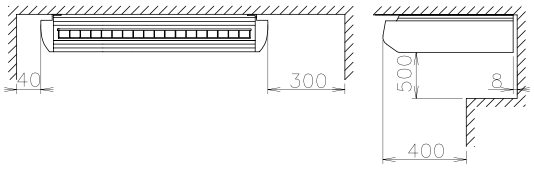

Units in: mm

No.	Content	Remarks
1	Air Intake	
2	Air Outlet	
3	Refrigerant Gas Line	Flare nut: Ø15.88
4	Refrigerant Liquid Line	Flare nut: Ø9.53
5	Drain pipe	Ø25 (outer)
6	Hole for drain	Ø32.5 (Knockout Hole)
7	Hole for Refrigerant piping	
8	Wiring hole of	
9	Bracket to suspend the machine	
10	Grille / Filter	

3.1.4. Duct Type Model

◆ **RPI-0.8~1.5FSN1E**

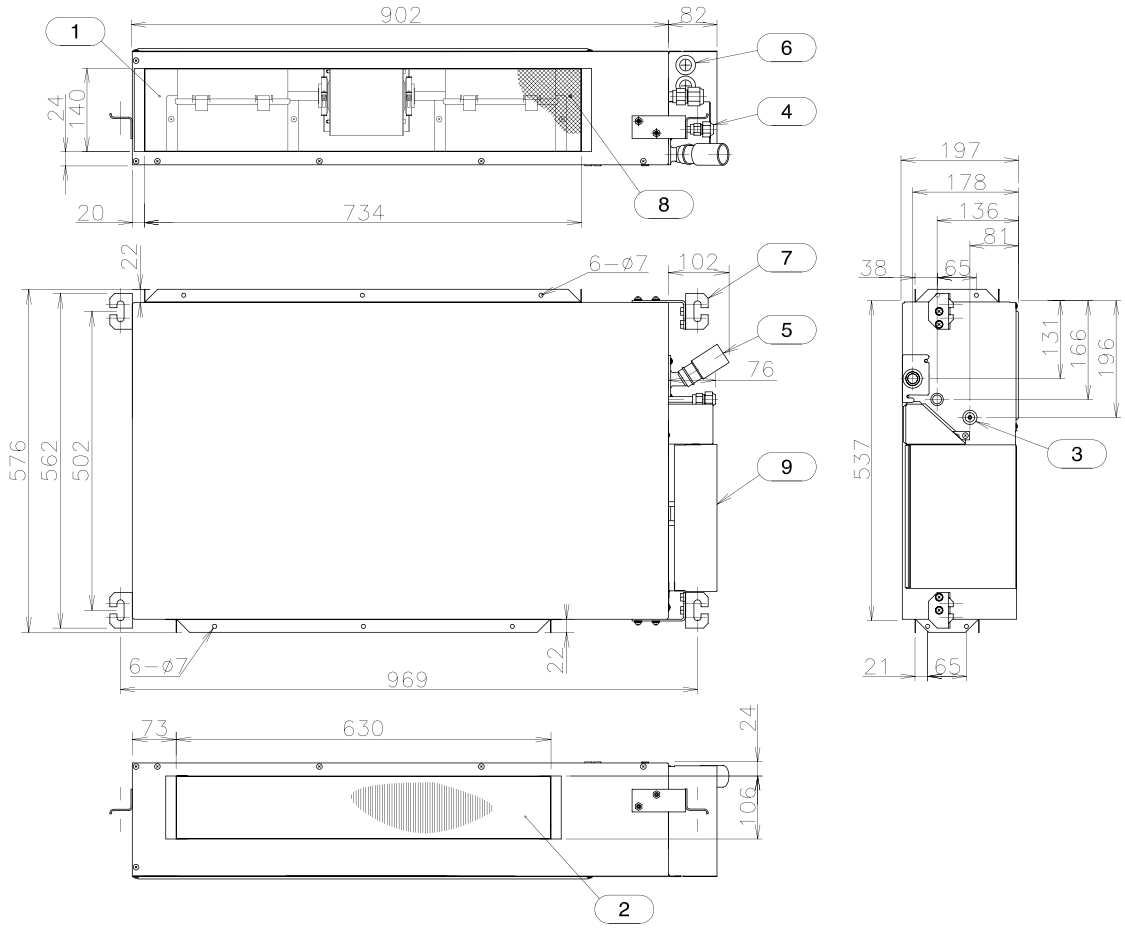

Installation space

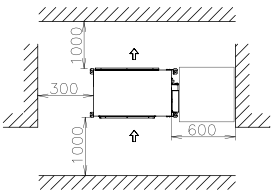

Units in: mm

No.	Content	Remarks
1	Air Intake	
2	Air Outlet	
3	Refrigerant Gas Line	Flare nut: Ø12.7
4	Refrigerant Liquid Line	Flare nut: Ø6.35
5	Drain pipe	Ø32 (outer)
6	Wiring hole of	2-Ø20 (outer)
7	Bracket to suspend the machine	
8	Filter	
9	Electrical Switch Box	

3

◆ **RPI-2.0~3.5FSN1E**

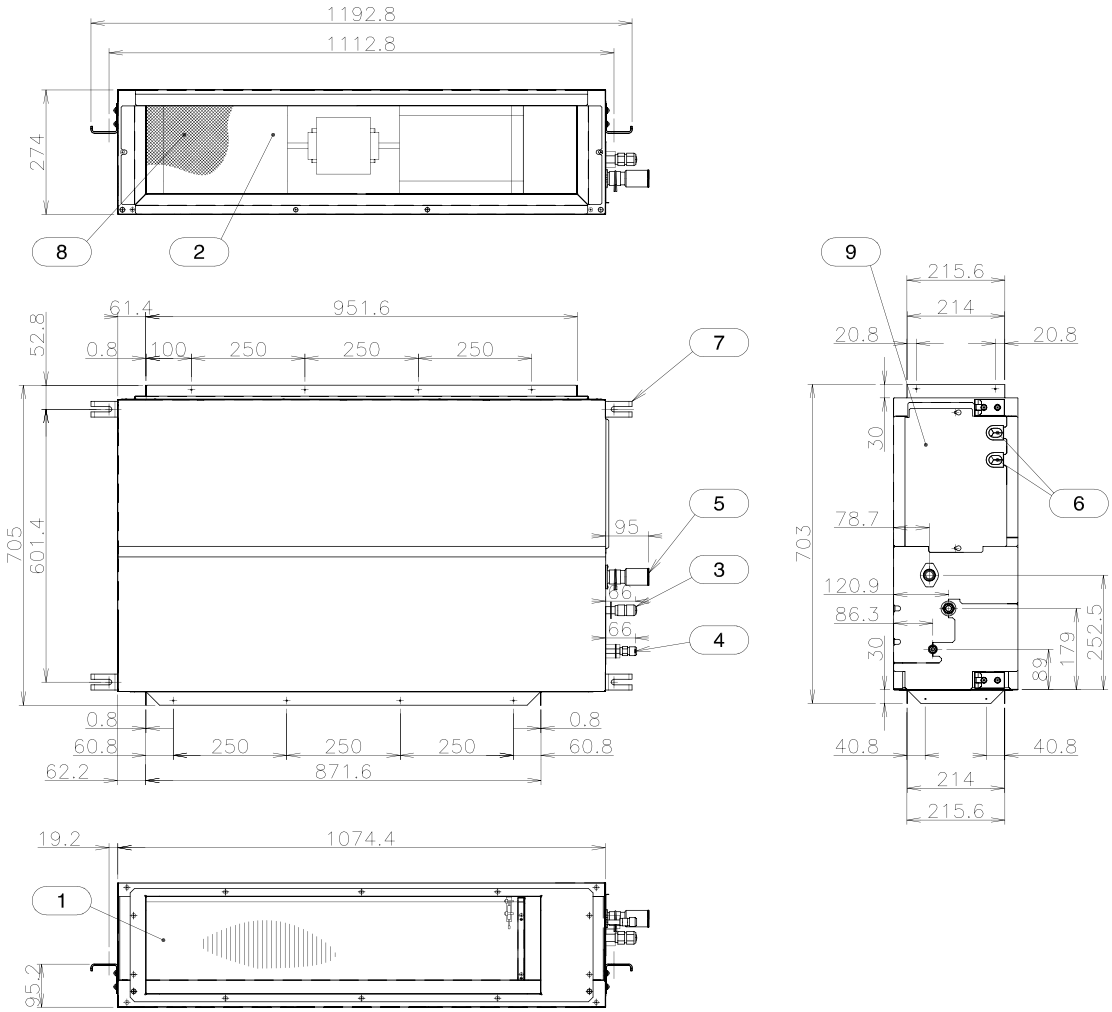

Installation space

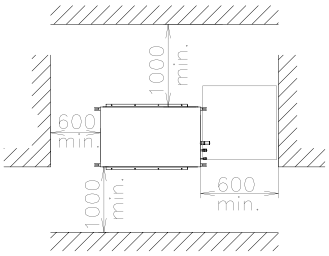

Units in: mm

No.	Content	Remarks
1	Air Intake	
2	Air Outlet	
3	Refrigerant Gas Line	Flare nut: Øa
4	Refrigerant Liquid Line	Flare nut: Øb
5	Drain pipe	Ø32 (outer)
6	Wiring hole of	2-Ø20 (outer)
7	Bracket to suspend the machine	
8	Filter	
9	Electrical Switch Box	

Model	control	b
RPI-2.0	Ø15.88	Ø6.35
RPI-2.5	Ø15.88	Ø9.53
RPI-3.0	Ø15.88	Ø9.53
RPI-3.5	Ø15.88	Ø9.53

HITACHI
Inspire the Next

◆ **RPI-4.0~6.0FSN1E**

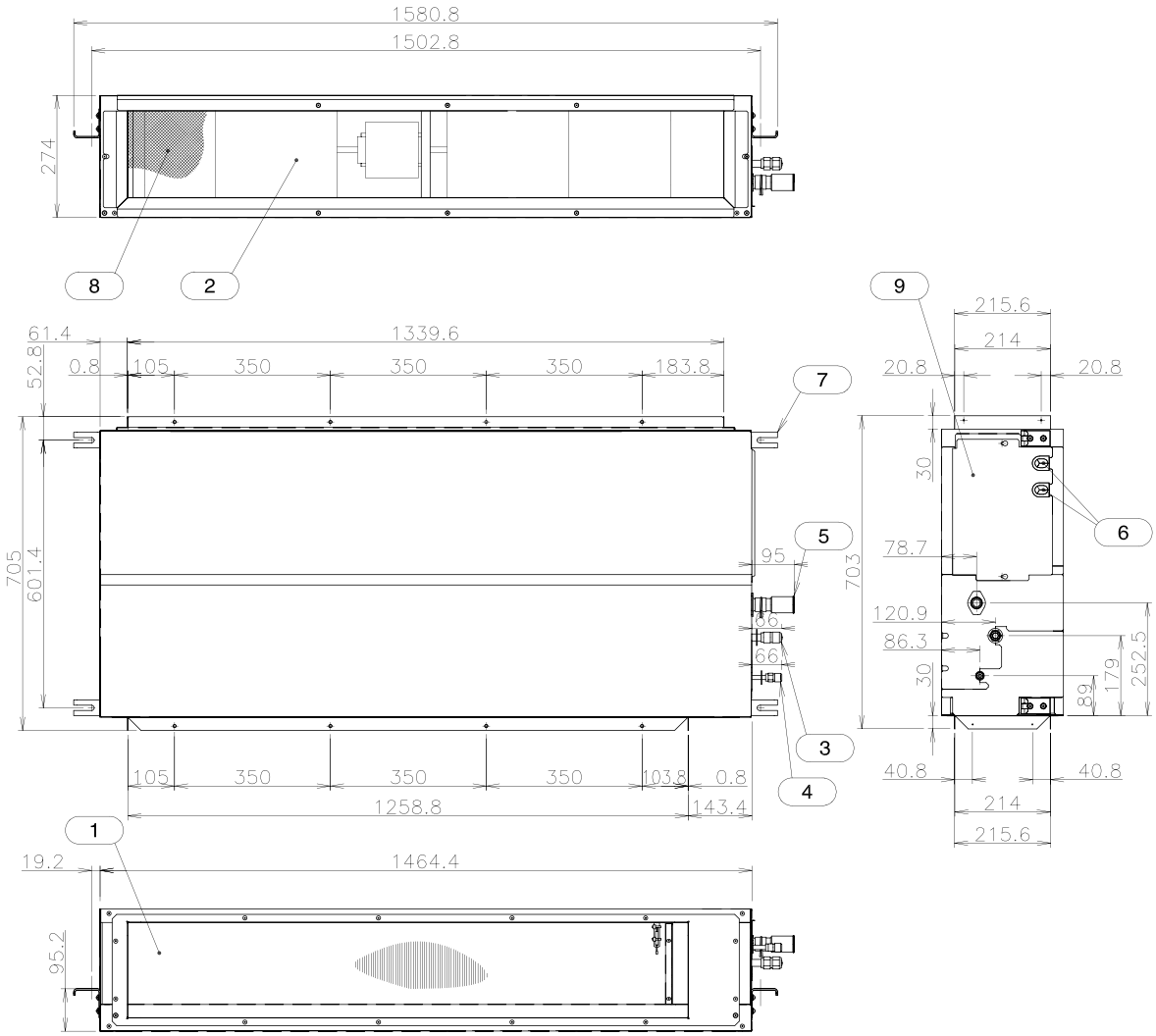

Installation Space

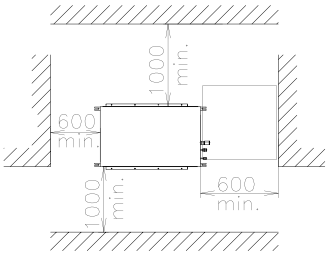

Units in: mm

No.	Content	Remarks
1	Air Intake	
2	Air Outlet	
3	Refrigerant Gas Line	Flare nut: Ø15.88
4	Refrigerant Liquid Line	Flare nut: Ø9.53
5	Drain pipe	Ø32 (outer)
6	Wiring hole of	2-Ø20 (outer)
7	Bracket to suspend the machine	
8	Filter	
9	Electrical Switch Box	

HITACHI
Inspire the Next

3

◆ **RPI-8.0/10.0FSNE**

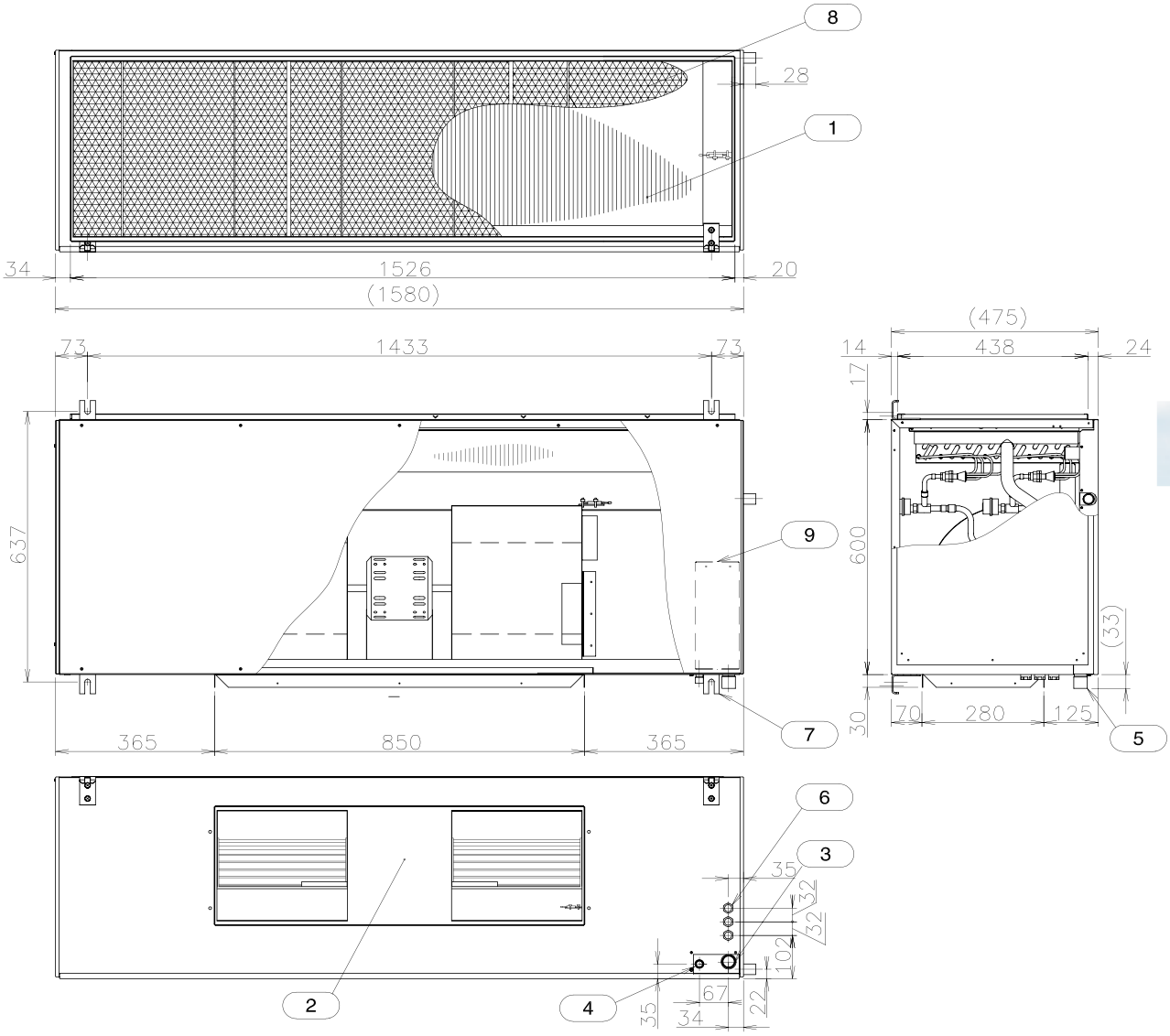

Installation Space

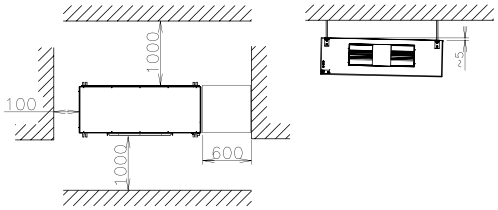

Units in: mm

No.	Content	Remarks
1	Air Intake	
2	Air Outlet	
3	Refrigerant Gas Line	Flare nut: Øa
4	Refrigerant Liquid Line	Flare nut: Øb
5	Drain pipe	Ø25 (outer)
6	Wiring hole of	
7	Bracket to suspend the machine	
8	Filter	
9	Electrical Switch Box	

Model	control	b
RPI-8.0	Ø28.6	Ø12.7
RPI-10.0	Ø28.6	Ø15.88

3.1.5. Wall Type Model

◆ **RPK-0.8~2.0FSNM**

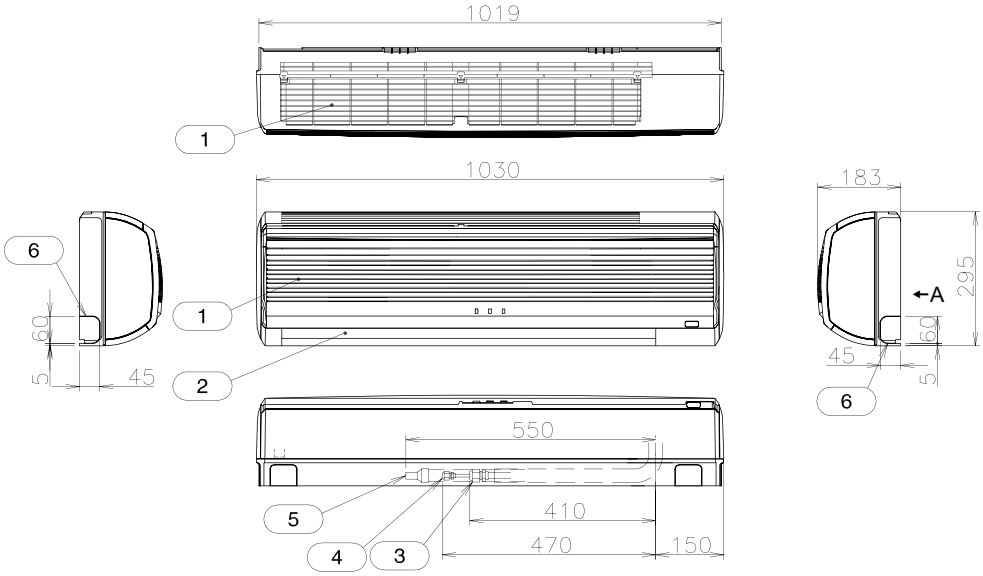

View from A
(Support)

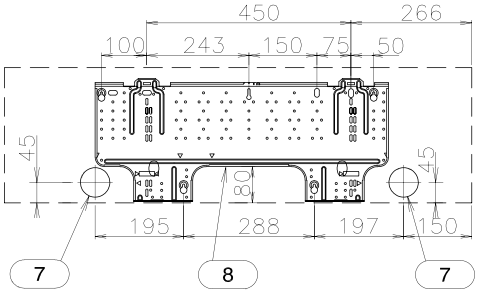

Installation space

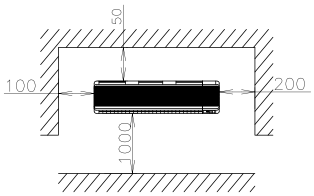

Units in: mm

No.	Content	Remarks
1	Air Intake	
2	Air Outlet	
3	Refrigerant Gas Line	Øa Flare Nut
4	Refrigerant Liquid Line	Øb Flare Nut
5	Drain pipe	Ø26 (outer)
6	Hole for wiring and/or refrigerant piping	Knock-out Hole
7	Hole for wiring and/or refrigerant piping	2-Ø65 (outer)
8	Bracket to suspend the machine	

Model	control	b
RPK-0.8	Ø12.7	Ø6.35
RPK-1.0	Ø12.7	Ø6.35
RPK-1.5	Ø12.7	Ø6.35
RPK-2.0	Ø15.88	Ø6.35

HITACHI
Inspire the Next

◆ **RPK-2.5~4.0FSNM**

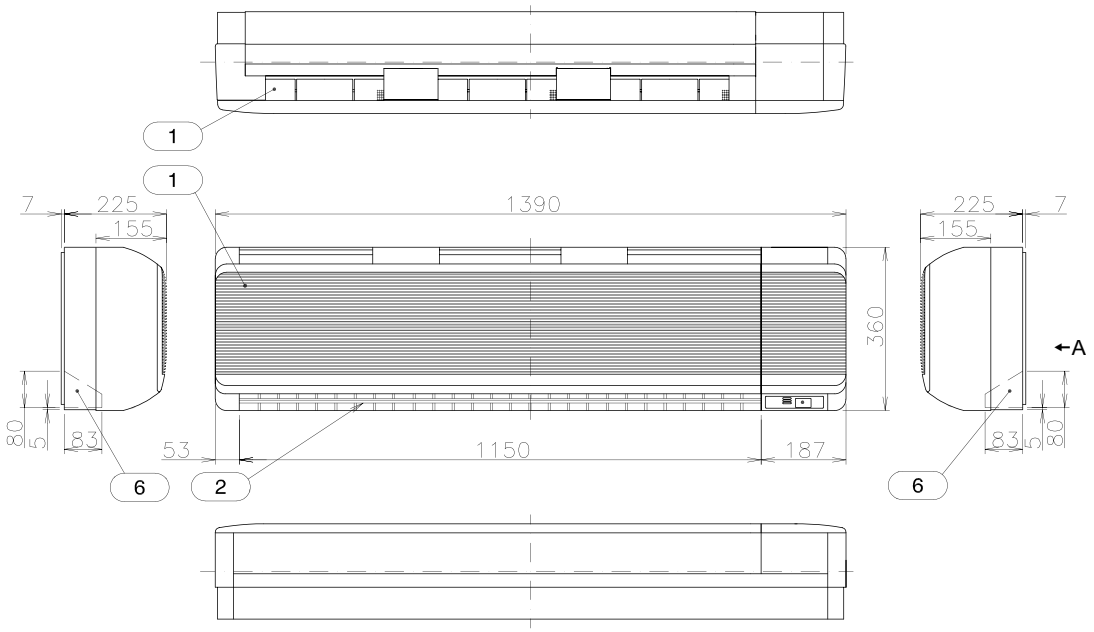

View from A

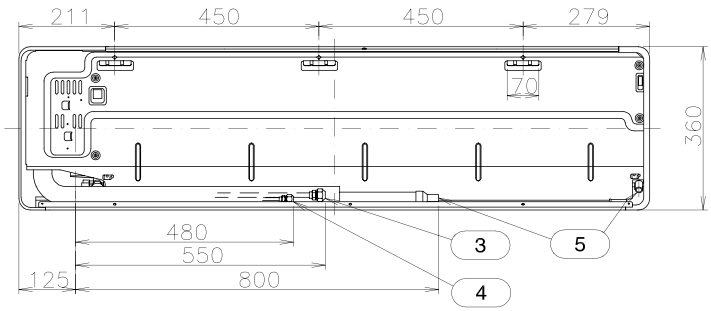

View from A
(Support)

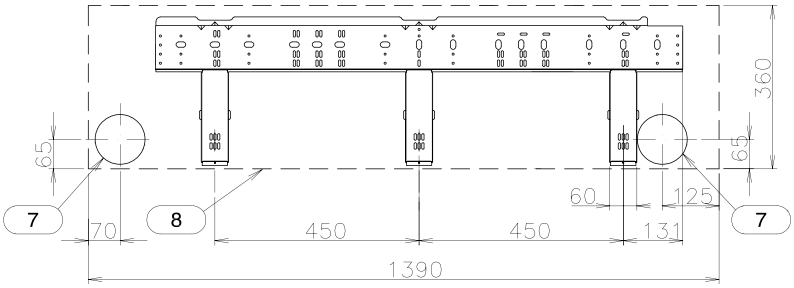

Installation space

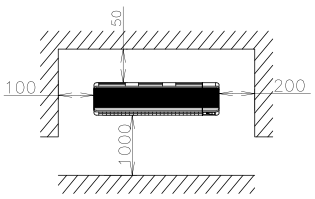

Units in: mm

No.	Content	Remarks
1	Air Intake	
2	Air Outlet	
3	Refrigerant Gas Line	Flare nut: Ø15.88
4	Refrigerant Liquid Line	Flare nut: Ø9.35
5	Drain pipe	Ø26 (outer)
6	Hole for wiring and/or refrigerant piping	Knock-out Hole
7	Hole for wiring and/or refrigerant piping	2-Ø110 (outer)/

HITACHI
Inspire the Next

◆ **RPK-1.0/1.5FSN1M**

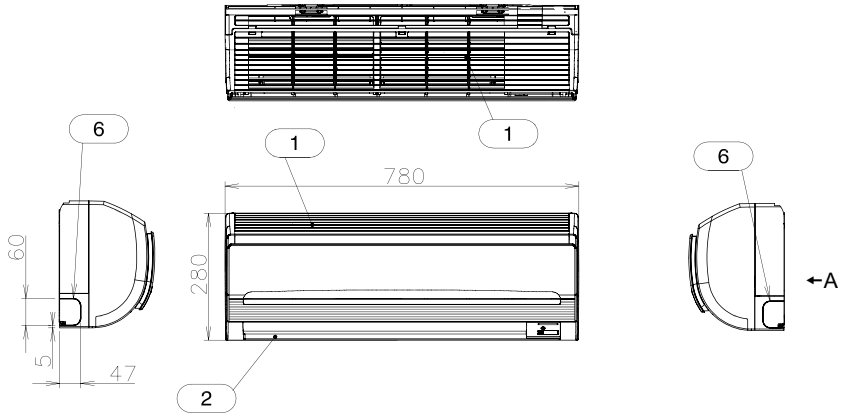

View from A

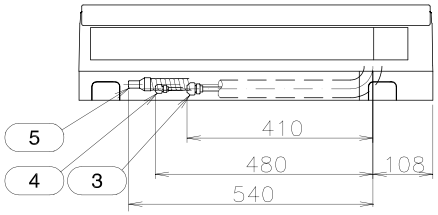

View from A
(Support)

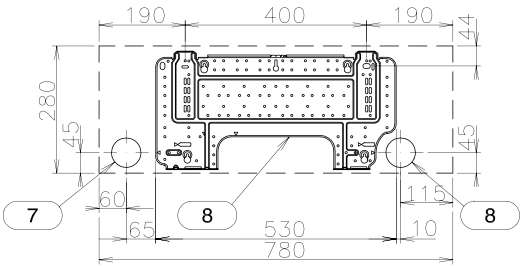

Installation Space

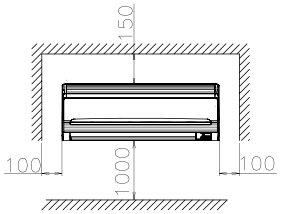

Units in: mm

No.	Content	Remarks
1	Air Intake	
2	Air Outlet	
3	Refrigerant Gas Line	Flare nut: Ø12.7
4	Refrigerant Liquid Line	Flare nut: Ø6.35
5	Drain pipe	Ø26 (outer)
6	Hole for wiring and/or refrigerant piping	Knock-out Hole
7	Hole for wiring and/or refrigerant piping	2-Ø65 (outer)/
8	Bracket to suspend the machine	

3.1.6. Floor Type Model

◆ RPF-1.0~2.5FSNE

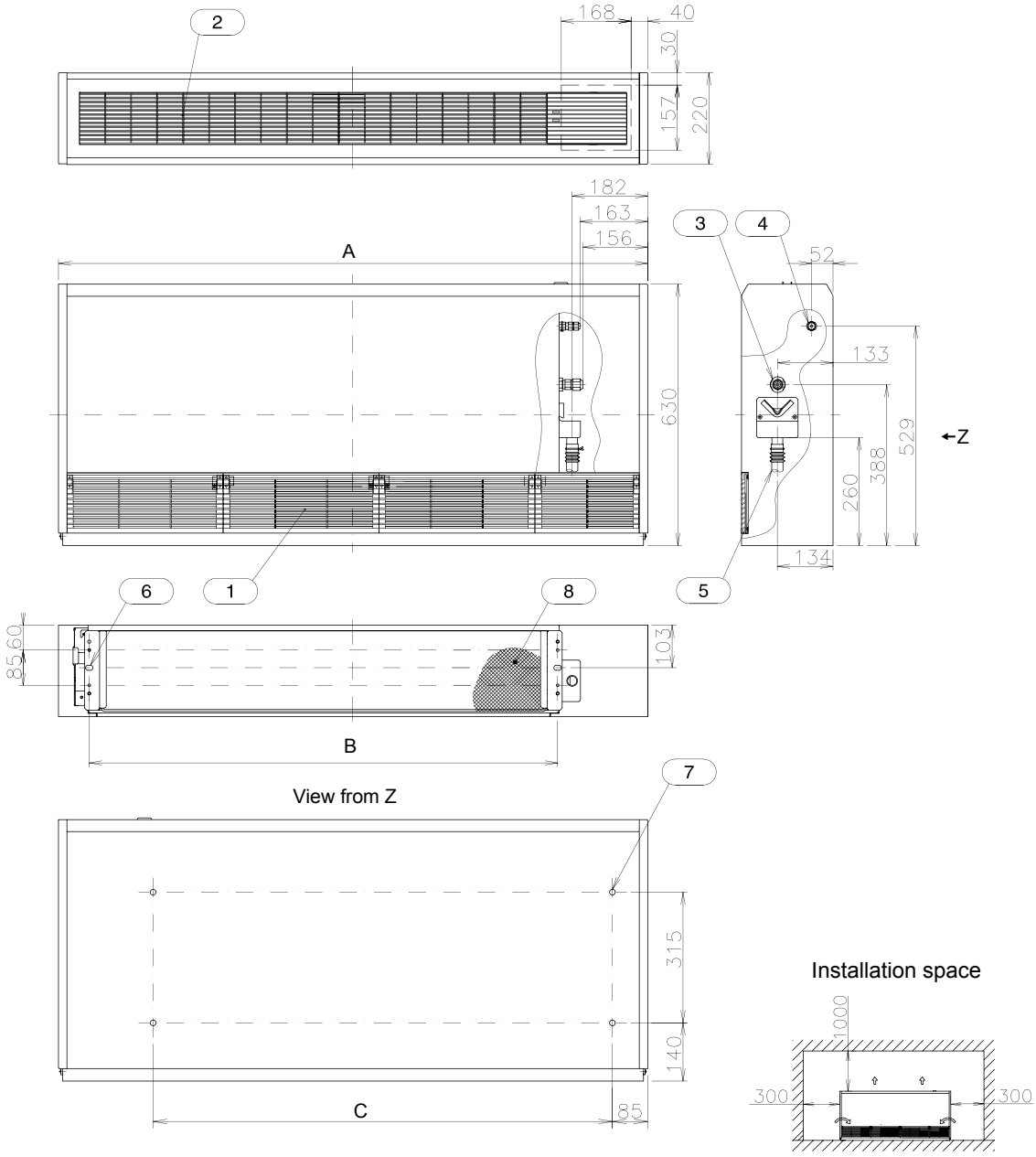

Units in: mm

No.	Content	Remarks
1	Air Intake	
2	Air Outlet	
3	Refrigerant Gas Line	Flare nut: Øa
4	Refrigerant Liquid Line	Flare nut: Øb
5	Drain pipe	Ø18.5 (outer)
6	Holes for fixing machine to floor	• 4-Ø7 (outer) For wood screw (4-M5) • 2-Ø12.5 (outer) For bolts (2-M8)-
7	Holes for fixing machine to wall	4-Ø14 (outer)/
8	Filter	

Model	A	B	C
RPF-1.0	1170	879	857
RPF-1.5	1170	879	857
RPF-2.0	1420	1129	1107
RPF-2.5	1420	1129	1107

Model	control	b
RPF-1.0	Ø12.7	Ø6.35
RPF-1.5	Ø12.7	Ø6.35
RPF-2.0	Ø15.88	Ø6.35
RPF-2.5	Ø15.88	Ø9.53

3.1.7. Floor Concealed Type Model

◆ **RPFI-1.0~2.5FSNE**

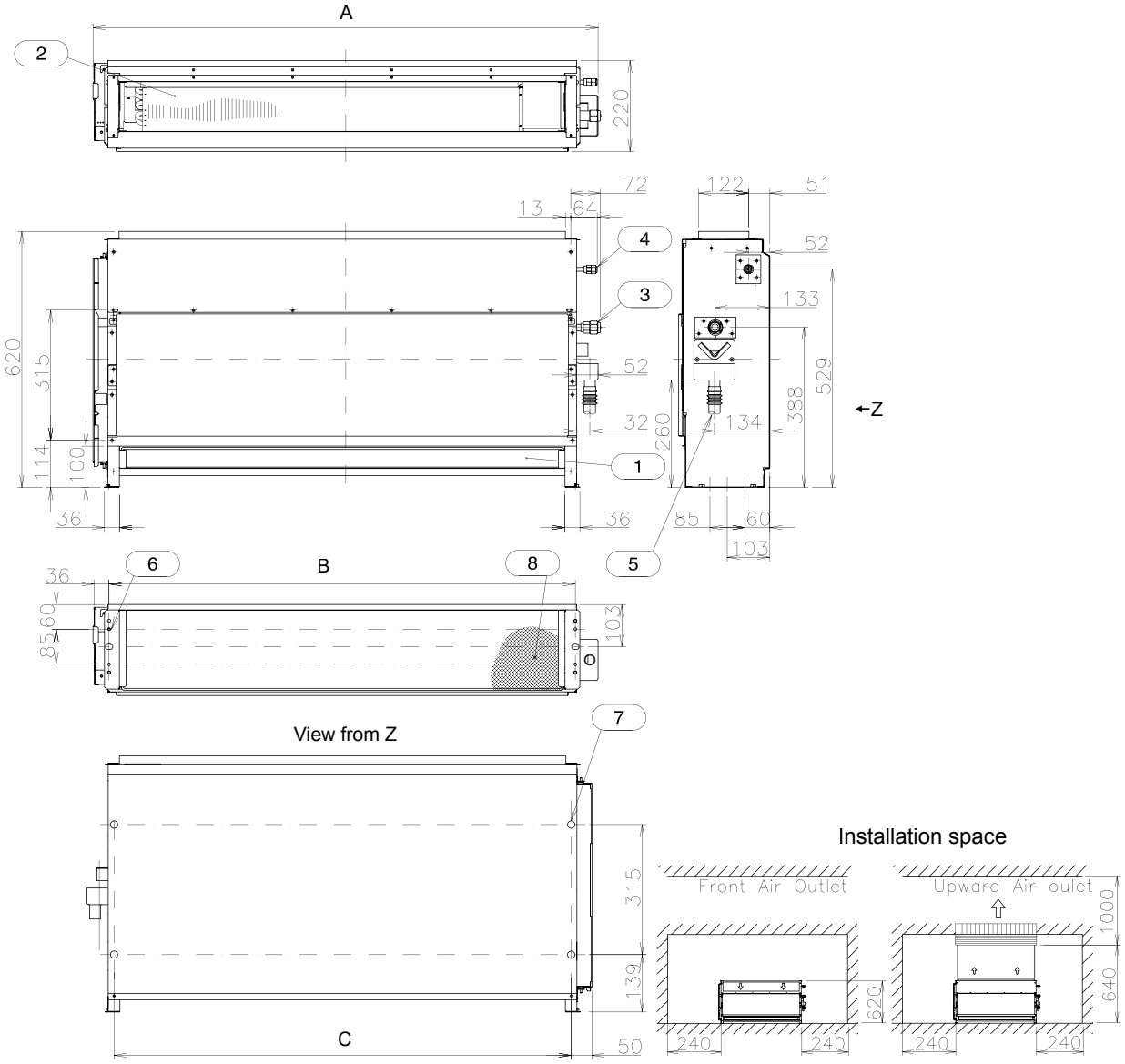

Units in: mm

No.	Content	Remarks
1	Air Intake	
2	Air Outlet	
3	Refrigerant Gas Line	Flare nut: Øa
4	Refrigerant Liquid Line	Flare nut: Øb
5	Drain pipe	Ø18.5 (outer)
6	Holes for fixing machine to floor	• 4-Ø7 (outer) For wood screw (4-M5) • 2-Ø12.5 (exterior) For bolts (2-M8)-
7	Holes for fixing machine to wall	4-Ø14 (outer)/
8	Filter	

Model	A	B	C
RPFI-1.0	973	879	857
RPFI-1.5	973	879	857
RPFI-2.0	1223	1129	1107
RPFI-2.5	1223	1129	1107

Model	control	b
RPFI-1.0	Ø12.7	Ø6.35
RPFI-1.5	Ø12.7	Ø6.35
RPFI-2.0	Ø15.88	Ø6.35
RPFI-2.5	Ø15.88	Ø9.53

3.2. Outdoor Units

3.2.1. FSN(E) / FXN(E) – Set Free Series

◆ **RAS-5FSN**

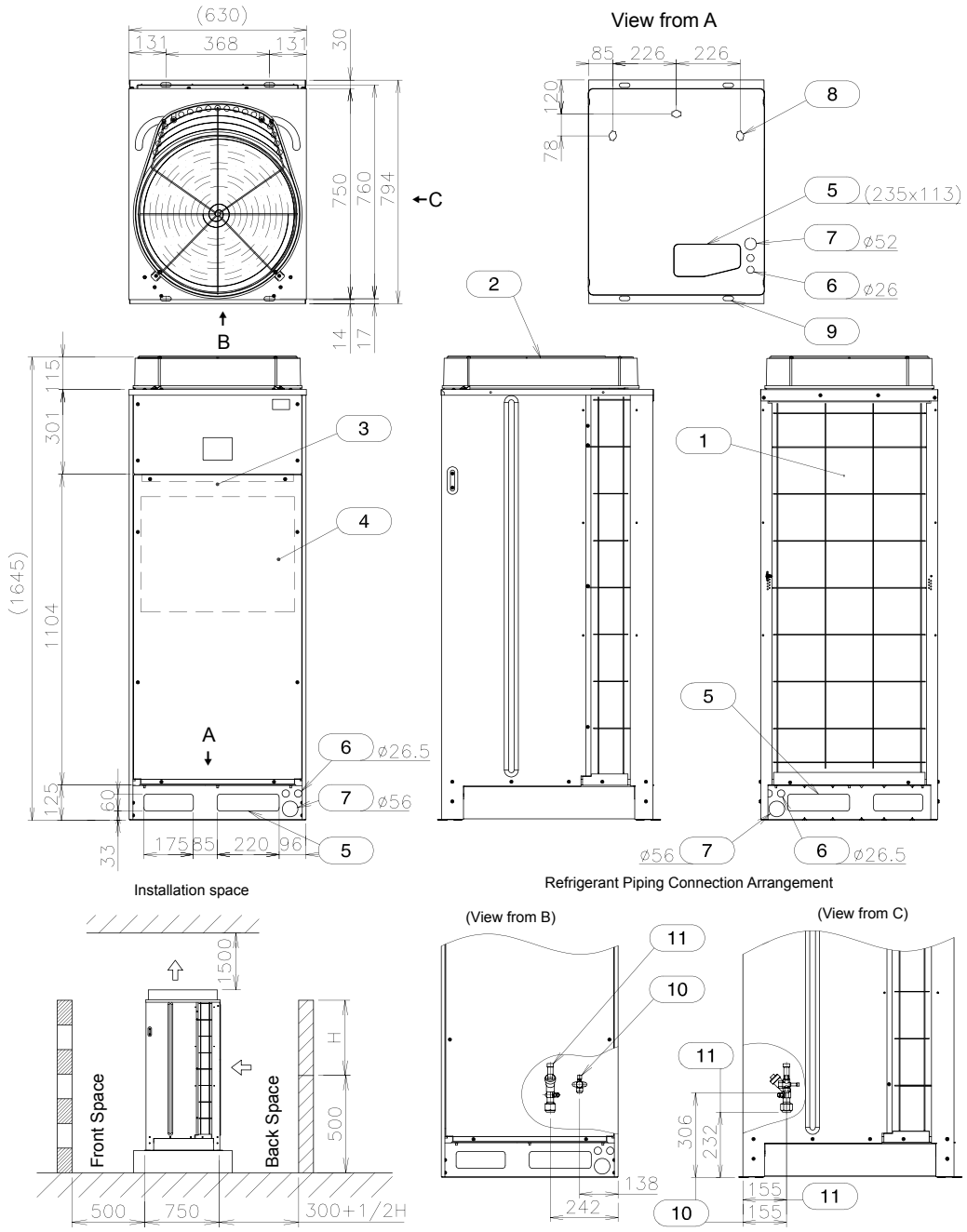

Units in: mm

No.	Content	Remarks
1	Air Intake	
2	Air Outlet	
3	Service cover	
4	Electrical Switch Box	
5	Holes for Refrigerant piping	
6	Holes for Control Line Wiring	
7	Holes for Power Source Wiring	
8	Drain holes	4-Ø26
9	Holes for fixing machine to floor	4-(38x16)
10	Refrigerant Liquid Line	Flare nut: Ø9.53
11	Refrigerant Gas Line	Flare nut: Ø15.88

◆ RAS-8~12FSN(E) / RAS-8~12FXN(E)

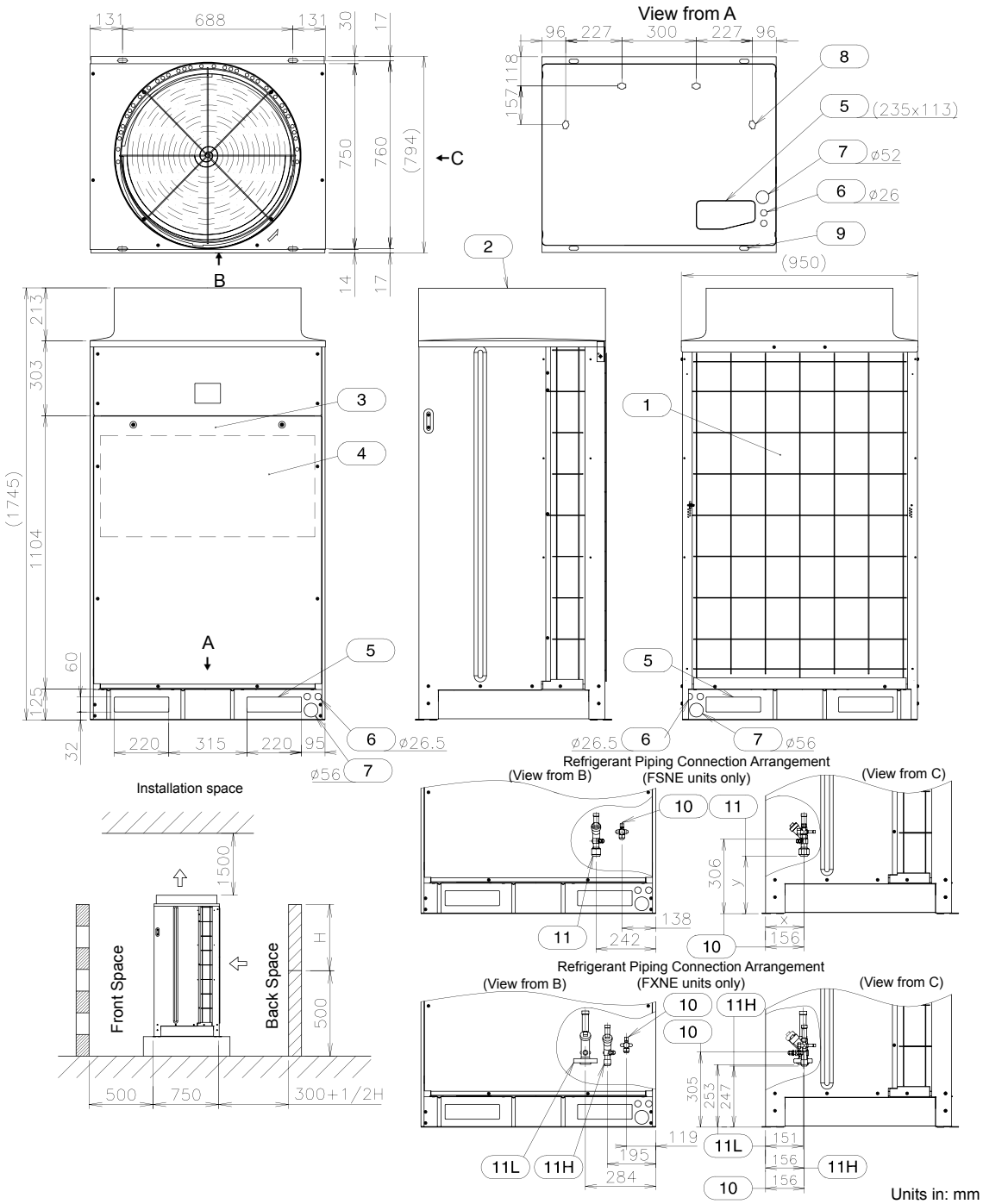

No.	Content	Remarks
1	Air Intake	
2	Air Outlet	
3	Service cover	
4	Electrical Switch Box	
5	Holes for Refrigerant piping	
6	Holes for Control Line Wiring	
7	Holes for Power Source Wiring	
8	Drain holes	4-Ø26
9	Holes for fixing machine to floor	4-(38x16)
10	Refrigerant Liquid Line	Flare nut: Øa
11	Refrigerant Gas Line	Flange: Øb
11H	High Refrigerant Gas Line	Flare nut: Øc
11L	Low Refrigerant Gas Line	Flange: Ød

Model	control	b	x	and
RAS-8FSNE	9.53	19.05	155	238
RAS-10FSNE	9.53	22.2	151	247
RAS-12FSNE	12.7	25.4	151	247

Model	control	c.	d
RAS-8FXNE	9.53	15.88	19.05
RAS-10FXNE	9.53	19.05	22.2
RAS-12FXNE	12.7	19.05	25.4

◆ RAS-14/16FSN

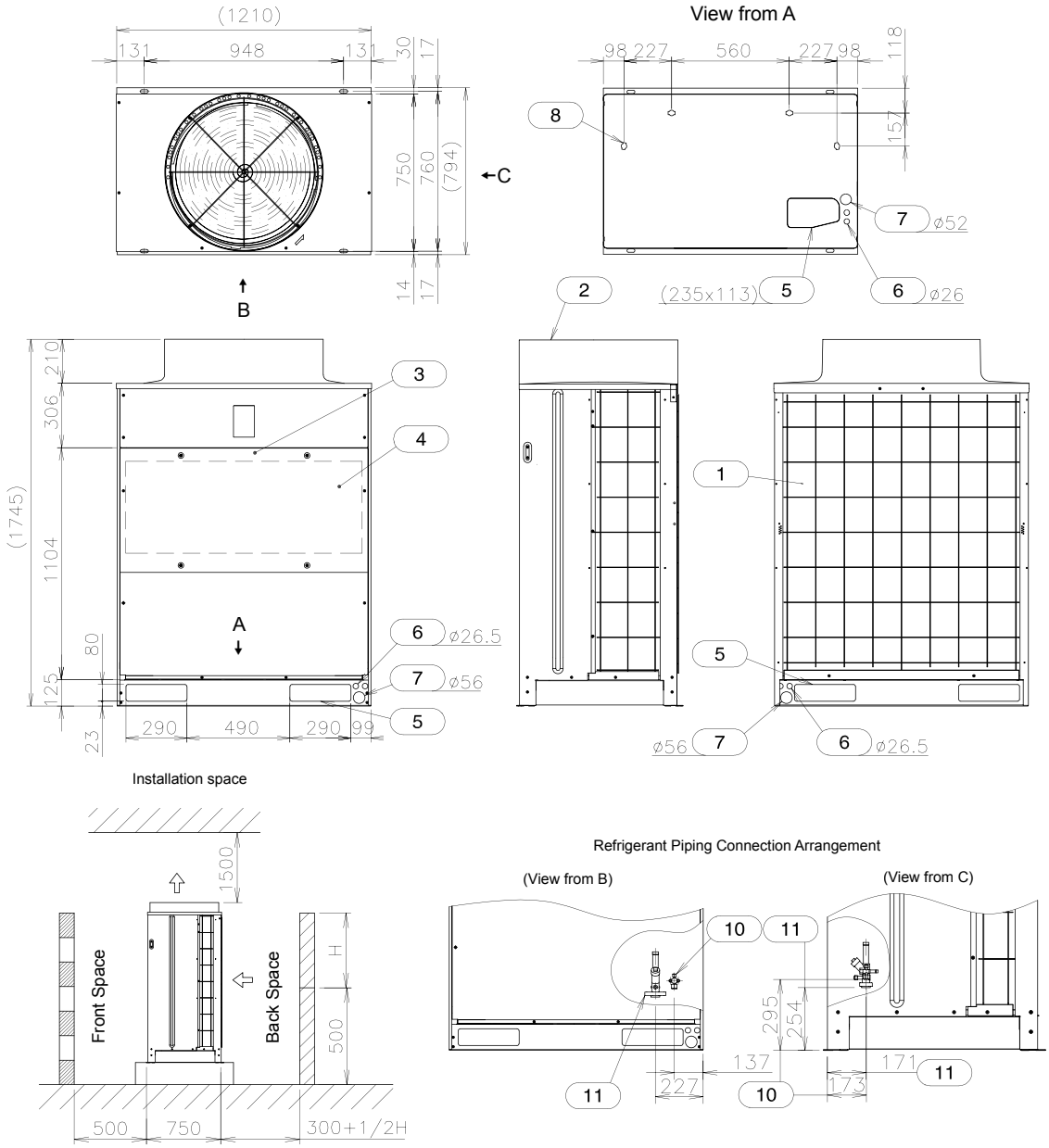

Units in: mm

No.	Content	Remarks
1	Air Intake	
2	Air Outlet	
3	Service cover	
4	Electrical Switch Box	
5	Holes for Refrigerant piping	
6	Holes for Control Line Wiring	
7	Holes for Power Source Wiring	
8	Drain holes	4-Ø26
9	Holes for fixing machine to floor	4-(38x16)
10	Refrigerant Liquid Line	Flare nut: Ø12.7
11	Refrigerant Gas Line	Flange: Øa

Model	control
RAS-14	25.4
RAS-16	28.6

◆ RAS-18~22FSN / RAS-16~22FXN

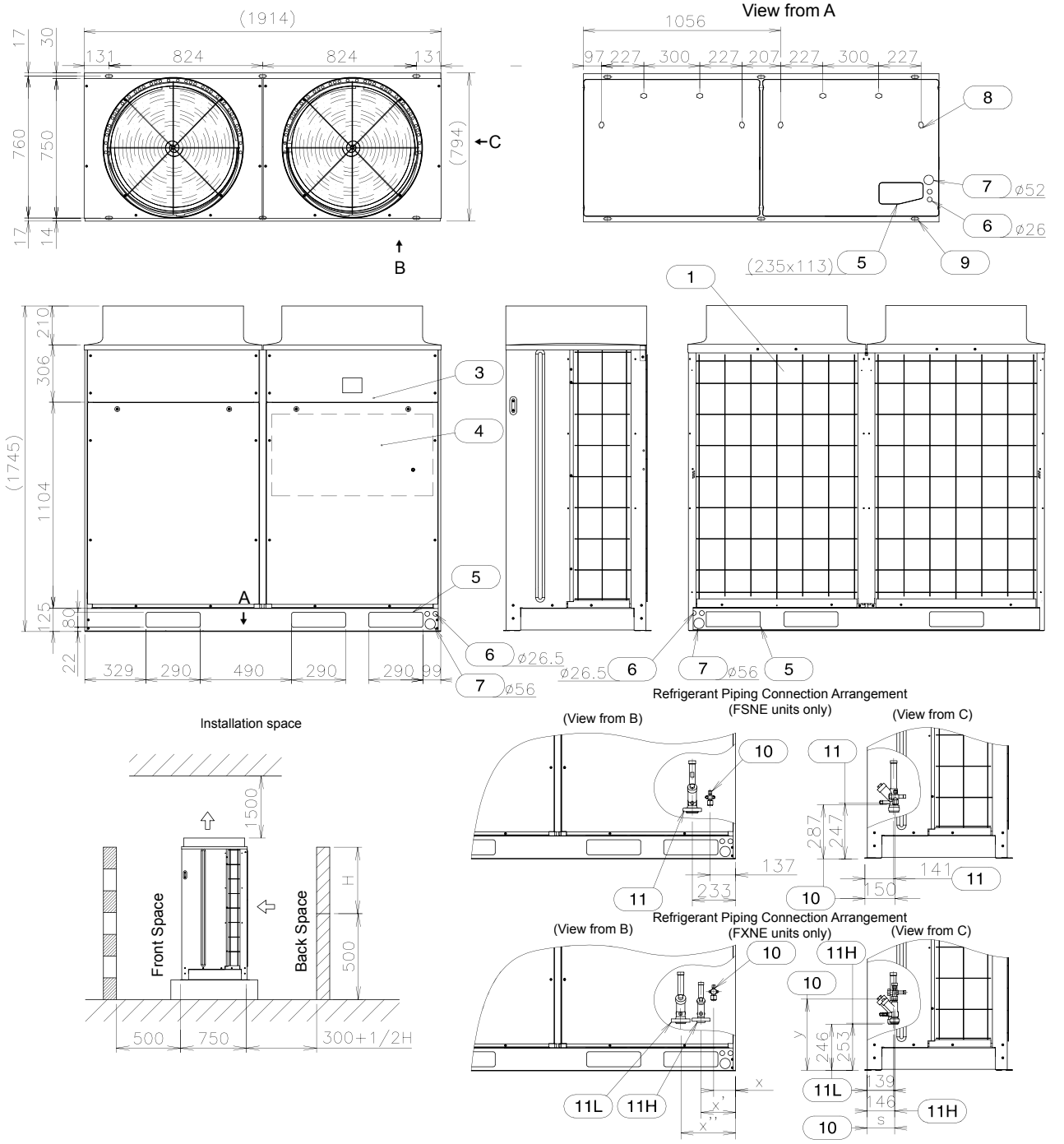

Units in: mm

No.	Content	Remarks
1	Air Intake	
2	Air Outlet	
3	Service cover	
4	Electrical Switch Box	
5	Holes for Refrigerant piping	
6	Holes for Control Line Wiring	
7	Holes for Power Source Wiring	
8	Drain holes	8-Ø26
9	Holes for fixing machine to floor	8-(38x16)
10	Refrigerant Liquid Line	Flare nut: Øa
11	Refrigerant Gas Line	Flange: Ø28.6
11H	High Refrigerant Gas Line	Flange: Ø22.2
11L	Low Refrigerant Gas Line	Flange: Ø28.6

Model	control
RAS-18FSN	15.88
RAS - 20FSN	15.88
RAS-22FSN	15.88

Model	control	s	x	x'	x''	and
RAS-16FXN	12.7	150	115	183	292	385
RAS-18FXN	15.88	150	115	183	292	385
RAS-20FXN	15.88	146	118	186	295	381
RAS-22FXN	15.88	146	118	186	295	381

◆ RAS-24~32FSN / RAS24~32FXN

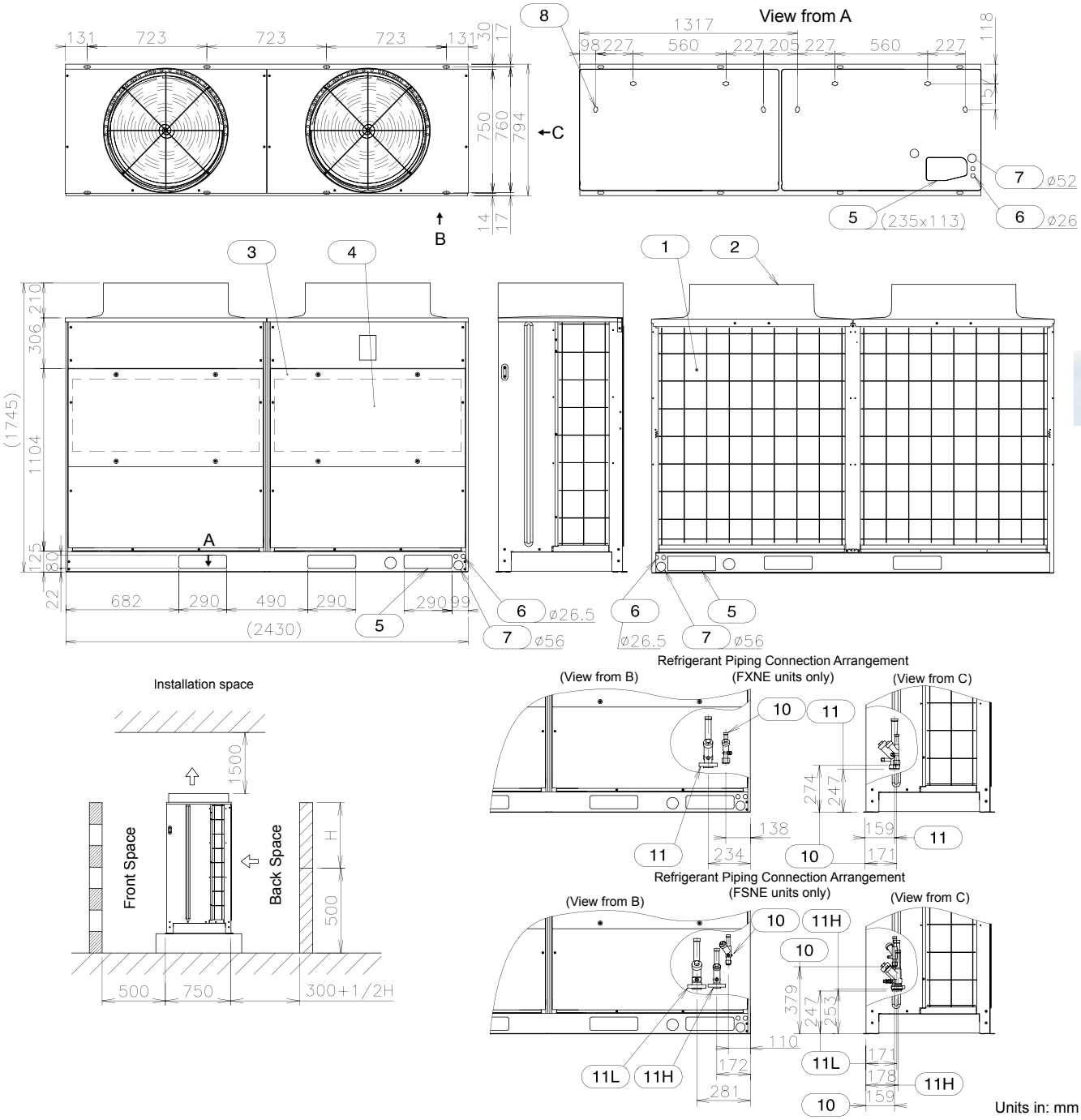

No.	Content	Remarks
1	Air Intake	
2	Air Outlet	
3	Service cover	
4	Electrical Switch Box	
5	Holes for Refrigerant piping	
6	Holes for Control Line Wiring	
7	Holes for Power Source Wiring	
8	Drain holes	8-Ø26
9	Holes for fixing machine to floor	8-(38x16)
10	Refrigerant Liquid Line	Flare nut: Øa
11	Refrigerant Gas Line	Flange: Øb
11H	High Refrigerant Gas Line	Flange: Øc
11L	Low Refrigerant Gas Line	Flange: Ød

Model	control	b
RAS - 24FSN	19.05	28.6
RAS-26FSN	19.05	31.75
RAS-28FSN	19.05	31.75
RAS - 30FSN	19.05	37.75
RAS-32FSN	19.05	37.75

Model	control	c.	d
RAS-24FXN	15.88	25.4	28.6
RAS-26FXN	15.88	28.6	31.75
RAS-30FXN	15.88	28.6	31.75
RAS-32FXN	15.88	28.6	31.75

3.2.2. Set Free Mini Series – FSVNE

◆ **RAS-3FSVNE**

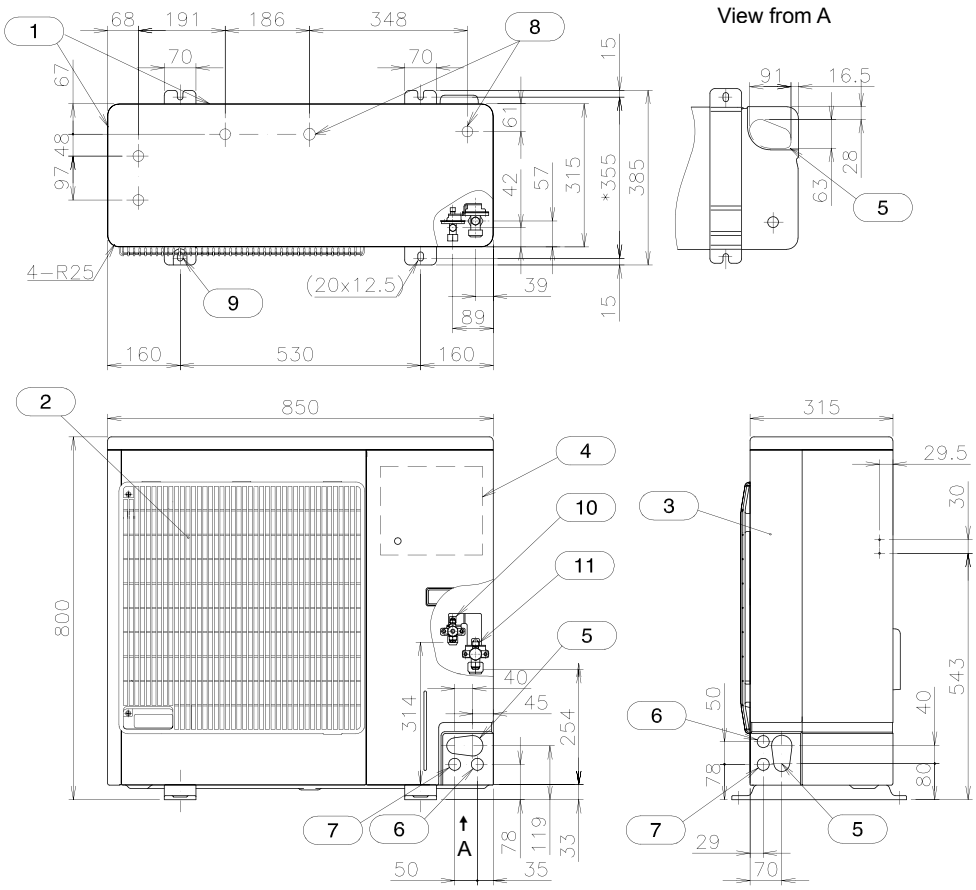

Units in: mm

No.	Content	Remarks
1	Air Intake	
2	Air Outlet	
3	Service cover	
4	Electrical Switch Box	
5	Holes for Refrigerant piping	
6	Holes for Control Line Wiring	
7	Holes for Power Source Wiring	
8	Drain holes	
9	Holes for fixing machine to floor	
10	Refrigerant Liquid Line	Flare nut: Ø9.53
11	Refrigerant Gas Line	Flare nut: Ø15.88

◆ RAS-4/5FSVNE

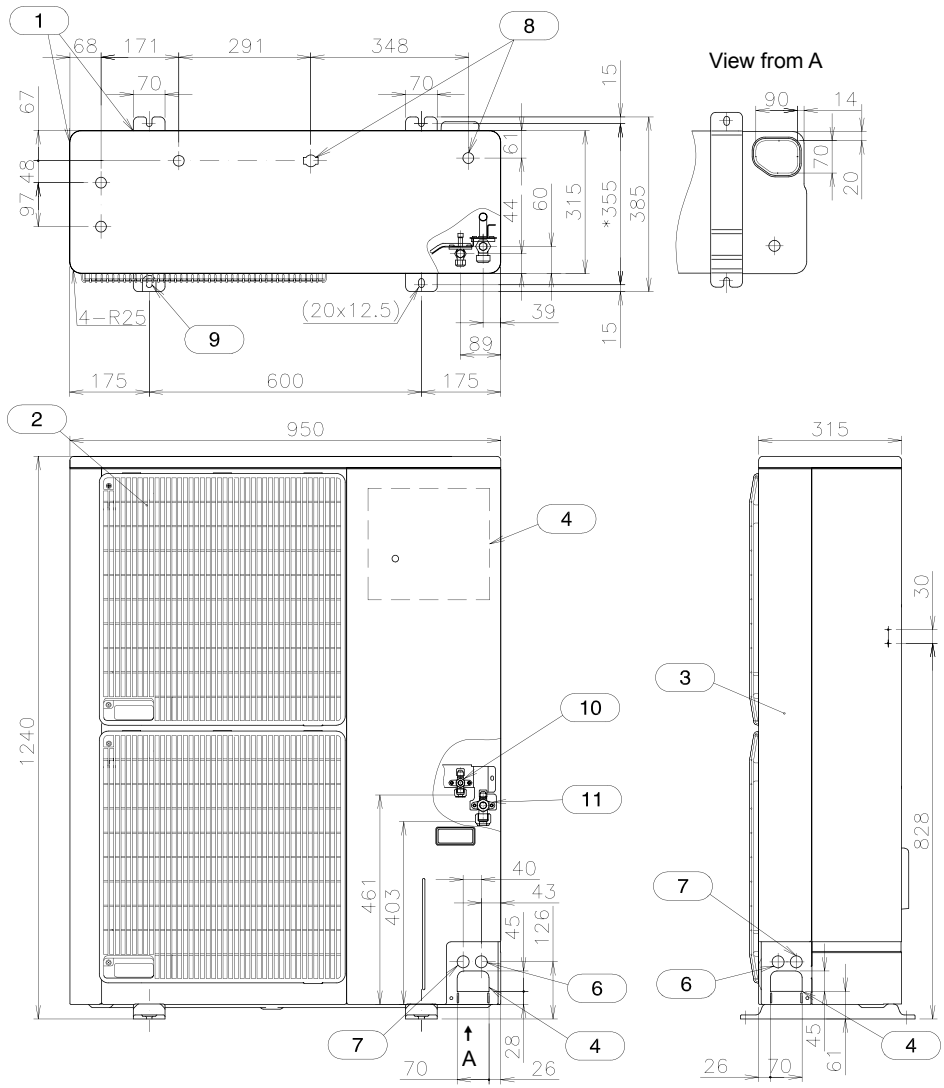

Units in: mm

No.	Content	Remarks
1	Air Intake	
2	Air Outlet	
3	Service cover	
4	Electrical Switch Box	
5	Holes for Refrigerant piping	
6	Holes for Control Line Wiring	
7	Holes for Power Source Wiring	
8	Drain holes	
9	Holes for fixing machine to floor	
10	Refrigerant Liquid Line	Flare nut: Ø9.53
11	Refrigerant Gas Line	Flare nut: Ø15.88

3.3. Complementary Units

3.3.1. Total Heat Exchanger

◆ **KPI-2521 / KPI-5021 / KPI-8021 / KPI-10021**

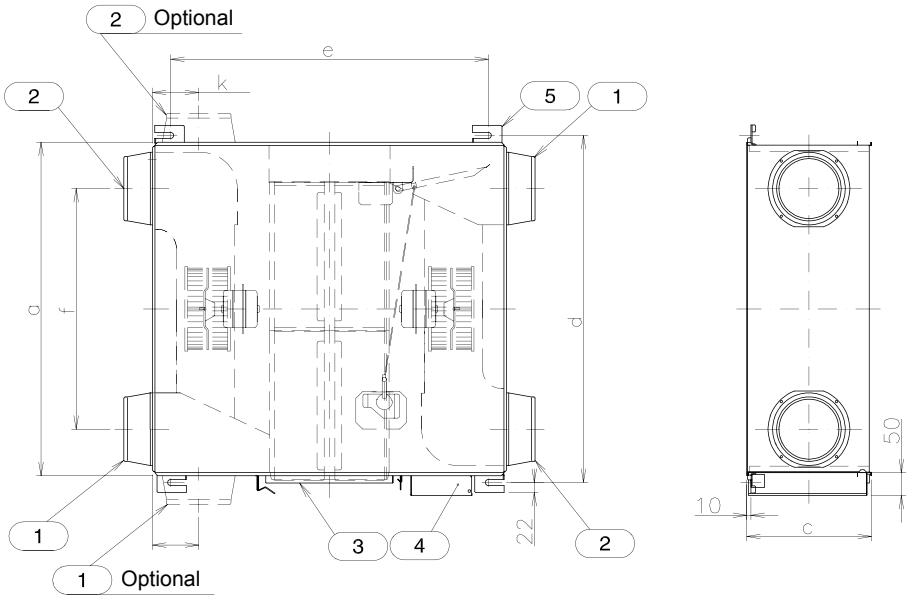

Installation space

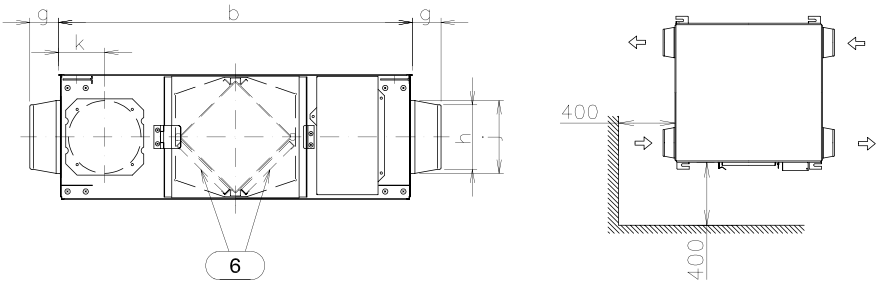

Units in: mm

No.	Content	Remarks
1	Air Intake	
2	Air Outlet	
3	Service cover	
4	Electrical Switch Box	
5	Holes for fixing machine	Ø14
6	Air Filter	

Model	Outer Dimensions		For fixation		For Duct		Duct Diameter		Duct direction change	
	control	b	c.	d	e	f	g	h	j	k
KPI-2521	735	780	275	765	700	530	63	142	160	102
KPI-5021	1016	888	317	1048	790	745	79	192	208	124
KPI-8021	1004	1164	398	1036	1030	690	79	242	258	149
KPI-10021	1231	1164	398	1263	1030	920	79	242	258	149

3.3.2. Econofresh Kit

◆ **EF-5GE**

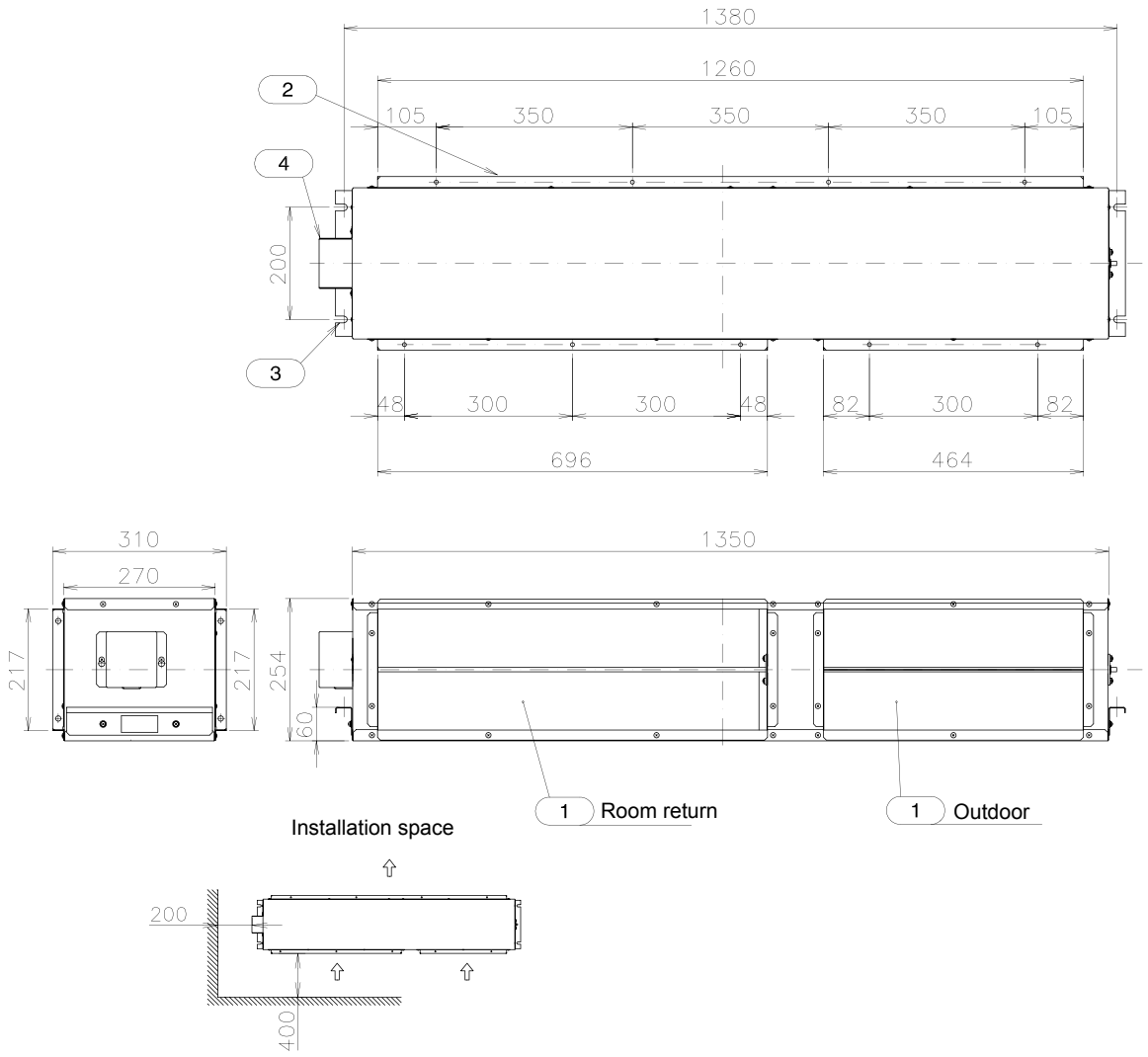

Units in: mm

No.	Content	Remarks
1	Air Intake	
2	Air Outlet	
3	Holes for fixing machine	4-15x12
4	Electrical Switch Box	

3.4. Accessories

3.4.1. CH-Box

◆ **CH-4.0/8.0NE**

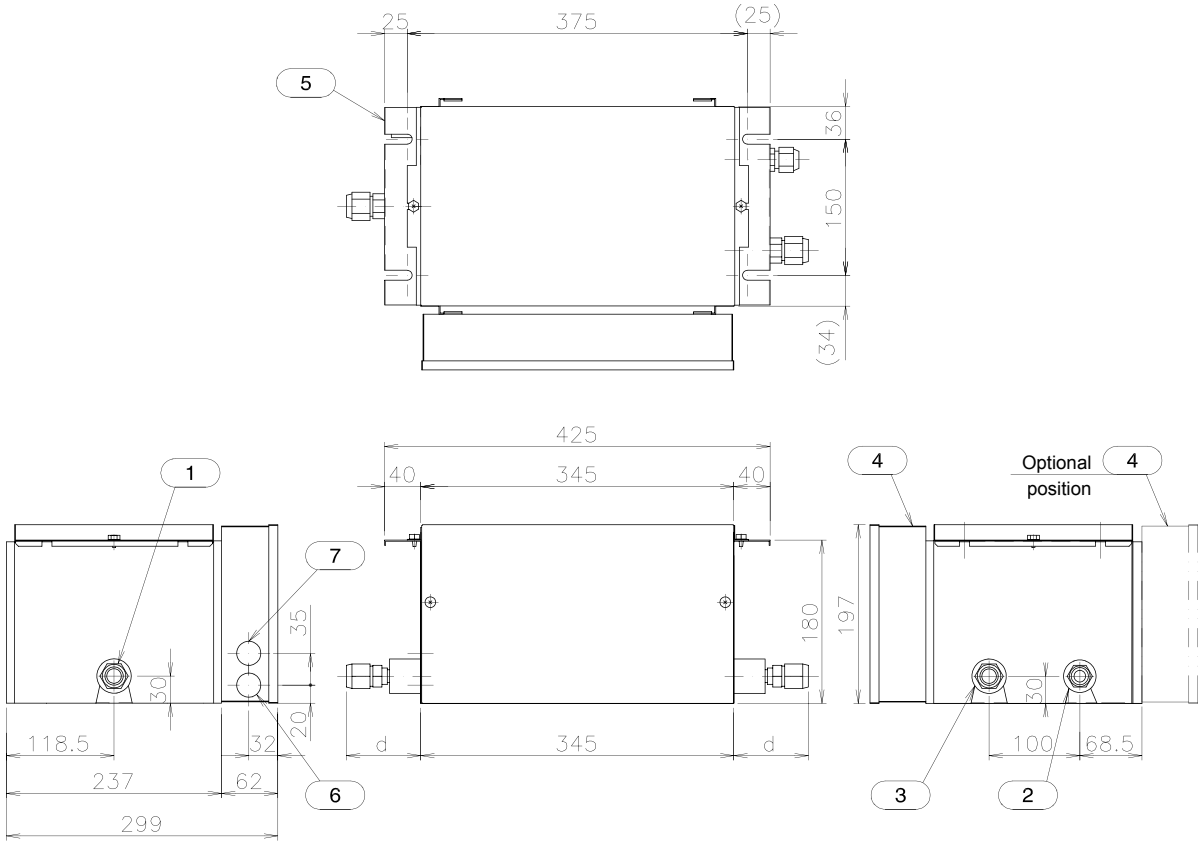

Installation space

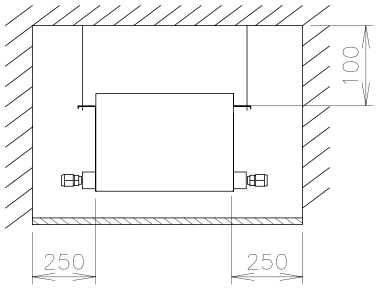

Units in: mm

No.	Content	Remarks
1	Refrigerant Gas Line	Flange: Øa
2	High Refrigerant Gas Line	Flange: Øb
3	Low Refrigerant Gas Line	Flange: Øc
4	Electrical Switch Box	
5	Bracket to suspend the machine	M8 or W5/16
6	Holes for Control Line Wiring	Ø26.5
7	Holes for Power Source Wiring	Ø26.5

Model	control	b	c.	d
CH-4.0	15.88	12.7	15.88	78
CH-8.0	19.05	15.88	19.05	82

HITACHI
Inspire the Next

3

◆ **CH-12.0NE**

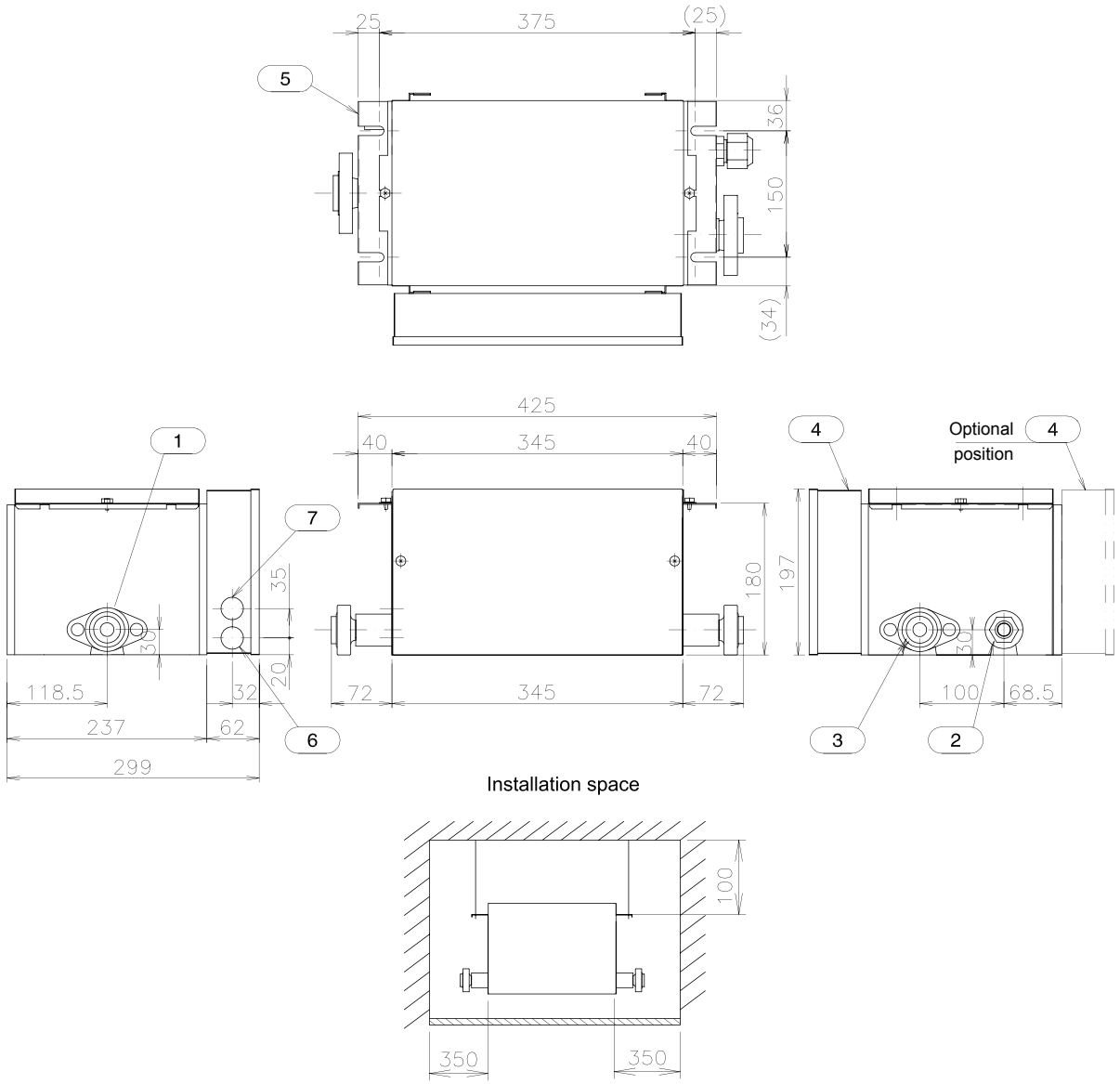

Units in: Mm

No.	Content	Remarks
1	Refrigerant Gas Line	Flange: Ø22.2
2	High Refrigerant Gas Line	Flange: Ø19.05
3	Low Refrigerant Gas Line	Flange: Ø22.2
4	Electrical Switch Box	
5	Bracket to suspend the machine	M8 or W5/16
6	Holes for Control Line Wiring	Ø26.5
7	Holes for Power Source Wiring	Ø26.5

HITACHI
Inspire the Next

4. Capacities and Selection Data

This chapter is a guide for selecting the most suitable units for your requirements and shows performance details of each unit of the new SET FREE FSN(E)/FXN(E)/FSVNE Series.

Contents

4. Capacities and Selection Data 112
4.1. Set-Free System Selection Procedure 112
4.1.1. Selection Unit Features 112
4.1.2. Selection Guide for Set Free 112
4.2. KPI System Selection Procedure 116
4.2.1. Selection Guide for KPI 116
4.2.2. Calculation of Heat Exchanger Efficiency 118
4.3. Econofresh System Selection Procedure 119
4.4. Nominal Cooling Capacity of the Outdoor Units 120
4.4.1. Characteristic Curve of the Cooling Capacity 120
4.4.2. Nominal Cooling Capacity of the Outdoor Units 121
4.5 Nominal Heating Capacity of the Outdoor Units 123
4.5.1. Characteristic Curve of the Heating Capacity 123
4.5.2. Heating Capacity Tables for Outdoor Units 124
4.6. Correction Factors 126
4.6.1. Temperature Correction Factor for Cooling 126
4.6.2. Heating Correction Factor for Outdoor Units 135
4.6.3. Piping Length Correction Factor 144
4.6.4. Defrost Correction Factor 148
4.7. Sensible Heat Factor (SHF) 149
4.8. Fan performance 150
4.8.1. RPI-0.8~1.5 – Fan Performance 150
4.8.2. RPI-2.0~6.0 – Fan Performance 151
4.8.3. RPI-8.0/10.0 – Fan Performance 152
4.8.4. KPI – Fan Performance 153
4.9. Temperature Distribution Diagrams 154
4.9.1. RCI – 4-Way Cassette Type 154
4.9.2. RCD – 2-Way Cassette Type 157
4.9.3. RPC – Ceiling Type 159
4.10. Sound Data 160
4.10.1. RCI – 4-Way Cassette Type 160
4.10.2. RCD – 2-Way Cassette Type 163
4.10.3. RPC – Ceiling Type 165
4.10.4. RPI – In-the-Ceiling Type 167
4.10.5. RPK – Wall Type 170
4.10.6. RPF – Floor Type 172
4.10.7. RPFI – Floor Concealed Type 173
4.10.8. RAS – FSN(E) Outdoor Units 174
4.10.9. RAS – FXN(E) Outdoor Units 178
4.10.10. RAS – FSVNE Outdoor Units 181
4.11. Foundation Provision 182
4.11.1. Foundation for Models FSN(E) and FXN(E) 182
4.11.2. Foundation for FSVNE Models 183
4.12. Center of Gravity 183
4.12.1. Center of Gravity for FSN(E) 183
4.12.2. Center of Gravity for FXN(E) 185

4.1. Set-Free System Selection Procedure

The following system procedure is giving a sample regarding unit selection system, indicating how to use all parameters showed in this chapter.

4.1.1. Selection Unit Features

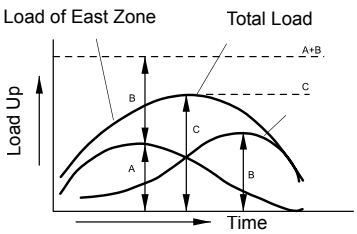

Example.
Air-conditioning system for a building

Considering the building distribution, the possible indoor unit position and the available air flow distribution, select the unit features that give the best efficiency and comfort. Decide the Outdoor Unit position that facilitates service and maintenance task, as well as easy refrigerant pipe installation.

Use the information showed in the following subchapters:

- For Operation Space possibilities: Chapter 3.
- For Air Flow distribution: Section 4.9 Temperature Distribution Diagrams.
- For Noise Characteristics: Subchapter 4.10 Sound Data.
- For Outdoor Unit position: Subchapter 4.11 Outdoor Unit.
- Piping length and lift range: Chapter 7.

If duct type unit is selected, the fan performance for duct calculation should be considered, as Subchapter 4.8. shows. The units are designed with three possible static pressure ranges in order to adapt it to all installation necessities.

NOTE:

Therefore, the maximum indoor unit capacity combined with outdoor unit should be carefully considered for correct indoor unit distribution at each building.

The Set-Free system enable the outdoor unit to be up to 30% smaller in capacity when compared with the conventional systems. The diagram shows a typical building with a morning peak heat load on the east zone equivalent to a 6HP unit.

In the afternoon a peak occurs on the west zone equivalent to a 7HP unit. Therefore, a conventional system would require total installed plant of 6HP + 7HP = 13HP. The maximum simultaneous load on the whole building occurs at noon and is equal to 10HP of unit capacity. A Set-Free System of 10HP can therefore be selected, and this capacity can be directed either to the east or west zone as dictated by the system controls.

Saving in installed plant = (6.5-5) / 6.5 x 100 = 23%

4.1.2. Selection Guide for Set Free

The following example is giving the method for indoor and outdoor units selection of Set-Free system.

System requirements

Calculate the cooling capacity and heating capacity of each indoor unit according to the following operation conditions:

Step 1:

- Total Load required for each room

Item		Room 1	Room 2	Room 3	Room 1+2+3
Estimated Cooling Load	kW	2.55	3.75	5.06	11.36
Estimated Heating Load	kW	2.55	3.85	5.10	11.50

◈ Temperature

Cooling mode	Heating mode
Outdoor Air Intake Dry Bulb: 32 °C	Outdoor Air Intake Dry Bulb: -1 °C Wet Bulb: -5 °C
Indoor Air Inlet Dry Bulb: 27 °C Wet Bulb: 22 °C	Indoor Air Inlet Dry Bulb: 18 °C
Equivalent piping length between Outdoor unit and farther Indoor unit	60 m
Height difference between Outdoor Unit and Indoor Unit	25 m

4

☛ **Step 2:**

Select Unit Capacity Performance

The unit HP is selected following the Cooling and Heating capacities shown in the following table:

Nominal Capacity of Indoor Units

Performance Capacity	Horsepower (HP)	0.8	1.0	1.5	2.0	2.5	3.0	3.5	4.0	5.0	6.0	8.0	10.00
Cooling Capacity	kW	2.20	2.80	4.50	5.60	7.10	8.00	9.00	11.20	14.00	16.00	22.40	28.00
Heating capacity		2.50	3.20	5.00	6.30	8.50	9.00	10.00	12.50	16.00	18.00	25.00	31.50

The indoor units capacity can be adjusted as indicated below, in order to adapt the unit to the real room needs.

Capacity adjusted by Dip Switch

Horsepower (HP)		1.3		1.8		2.3	2.8
Variable Capacity		1.0→1.3	1.3←1.5	1.5→1.8	1.8←2.0	2.3←2.5	2.5→2.8
Cooling Capacity	kW	3.10	3.80	5.00	5.00	6.50	7.50
Heating capacity		3.50	4.30	5.50	5.70	7.80	8.90
Dip Switch Setting (DSW3)							

NOTE:

In the example shown to the right we have selected the following indoor units based on the conditions indicated above, and the Outdoor unit based on the capacity that corresponds to the combination of indoor units (shown in chapter 2):

An example of a calculation for cooling and heating is shown below.

Unit and nominal capacity selected for each room

Item		Room 1	Room 2	Room 3	1+2+3	No.2 system
Selected Model		RPI-1.5 (Adjusted to 1.3)	RPI-2.0	RPI-2.5 (Adjusted to 2.8)	6.1 HP 122%	RAS-5FSN (Chapter 2)
Nominal Cooling Capacity (Q_{nc})	kW	3.80	5.60	7.50	16.90	14.00
Nominal heating capacity (Q_{nh})	kW	4.30	6.30	8.90	19.50	16.00

Step 3:

Read Selected Unit Performance

The unit's performance can be in cooling or heating mode:

Cooling mode

a) Unit performance should be calculated considering the following correction factors:

$$Q_c = Q_{nc} \, x \, f_t \, x \, f_l$$

Q_c: Cooling Capacity (kW)
Q_{nc}: Cooling Capacity (kW)
f_t: Temperature correction factor
f_l: Piping length correction factor

Example: Cooling:

b) Calculate the actual cooling capacity of the outdoor unit

- Calculation of the nominal capacity:
  Calculate the nominal cooling capacity of unit RAS-5FSN at 122% of the combined indoor power (Section 4.3). By means of an interpolation of between 120% and 130% we can calculate that the nominal capacity is **14.32 kW**.
- Corrected capacity calculation:
  Calculate the corrected capacity by applying the temperature correction factor for cooling (Section 4.6.1). By means of an interpolation we calculate that the correction factor based on the selected temperature is 1.13. Therefore, we can calculate that the corrected capacity is 14.32 x 1.13 = **16.18 kW**.
- Calculation of the actual cooling capacity of the outdoor unit:
  Finally, we must apply the correction factor for piping length, since performance varies depending on it (Section 4.6.3). Since the correction factor we obtained is 0.83, the actual capacity is: 16.18 x 0.83 = **13.43 kW**.

c) Indoor unit capacity: The actual capacity of each unit is:

$$Q_{1c} = Q_c \, x \, \frac{Q_{nc1}}{\Sigma Q_{nc}}$$

NOTE:

Refer to the data in section 4.4, 4.5 to obtain the required temperatures for the electrical consumption of the outdoor unit.

Get indoor unit input from chapter 6 Electrical data.

<RPI-1.5> (adjusted at 1.3)	Cooling capacity =13.43 x (3.80 / 16.90) = 3.02 kW
<RPI-2.0>	Cooling capacity =13.43 x (5.60 / 16.90) = 4.45 kW
<RPI-2.5> (adjusted at 1.3)	Cooling capacity =13.43 x (7.50 / 16.90) = 5.96 kW

◆ Heating mode

a) Unit performance should be calculated considering the following correction factors:

$$Q_h = Q_{nh} \, x \, f_t \, x \, f_l \, x \, f_d$$

Q_h: Actual Heating Capacity (kW)
Q_{nh}: Nominal Heating Capacity (kW)
f_t: Temperature correction factor
f_l: Piping length correction factor
f_d: Defrosting correction factor

b) Calculate the actual heating capacity of the outdoor unit

☛ Example:
Heating:

- Calculation of the nominal capacity:
  Calculate the nominal heating capacity of unit RAS-5FSN at 122% of the combined indoor power (Section 4.4). By means of an interpolation of between 120% and 130% we find that the nominal capacity is **18.10 kW**.
- Corrected capacity calculation:
  Calculate the corrected capacity by applying the temperature correction factor for heating (Section 4.6.2). By means of an interpolation we calculate that the correction factor based on the selected temperature is 0.72.
  Therefore, we can calculate that the corrected capacity is 18.10 x 0.72 = **13.03 kW**.
- Calculation of the actual heating capacity of the outdoor unit:
  Finally, the unit's performance varies depending on the length of the piping and the defrosting operation of the unit.
  In the case of the piping length (Section 4.6.3), the correction factor is 0.95, while the correction factor for the defrosting operation (section 4.6.4) is 0.93.
  When applyingthe factors, the actual capacity is: 13.03 x 0.95 x 0.93 = **11.51 kW**.

c) Indoor unit capacity. The actual capacity of each unit is:

$$Q_{1h} = Q_h x \frac{Q_{nh1}}{Q_{nh}}$$

<RPI-1.5> (adjusted at 1.3)	Heating capacity =11.51 x (4.30 / 19.50) = 2.53 kW
<RPI-2.0>	Heating capacity =11.51 x (6.30 / 19.50) = 3.71 kW
<RPI-2.5> (adjusted at 1.3)	Heating capacity =11.51 x (8.90 / 19.50) = 5.25 kW

NOTE:

Refer to the data in section 4.4, 4.5 to obtain the required temperatures for the electrical consumption of the outdoor unit.

Get indoor unit input from chapter 6 Electrical data.

The results are the following:

Item			Room 1	Room 2	Room 3	1+2+3	No.2 system
Selected Model			RPI-1.5 (Adjusted to 1.3)	RPI-2.0	RPI-2.5 (Adjusted to 2.8)	6.1 HP 122%	RAS-5FSN
Cooling Mode	Performance Capacity	kW	3.02	4.45	5.96	13.43	
	Estimated Load	kW	2.55	3.75	5.06	11.36	
Heating mode	Performance Capacity	kW	2.88	4.30	5.96	11.51	
	Estimated Load	kW	2.65	4.00	5.45	11.50	

4.2. KPI System Selection Procedure

4.2.1. Selection Guide for KPI

In order to calculate the adequate unit, it is going to explain two methods.

- **Method 1, Areas**
- **Method 2, Inhabitants**

It is important to check local legislation concerning ventilation of the final results. Here you can find a quick method to calculate the ventilation. Remember that this is an approximation of the result.

It will be necessary to renovate the air in order to reduce the CO_2 rate in a room, eliminate unpleasant smells, smoke, and pollution. Summarising we ventilate a room to provide a higher level of comfort to the people who is inside.

The first point to analyse is the kind of activity developed in the room. Is not the same an office than a pub.

After this it calculate the volume of the room we want to condition.

☛ **Method 1:**

This method is based on **areas**, and the number of air renovations.

Volume $V\ (m^3) = A \times B \times C$
$A \times B$ = Room surface (m^2)
C = Ceiling height (m)

☛ See table below in order to determine the number of air ventilations per hour required depending on the kind of room. This table is not a standard table for all countries, although the layout will be the same.

Kind of room	Air ventilation / hour (N)
Cathedral	0
Modern Church (Low Ceiling)	1-2
Schools	2-3
Offices	3-4
Pubs	4-6
Hospitals	5-6
Restaurants	5-6
Laboratory	6-8
Discotheques	10-12
Kitchens	10-15
Laundries	20-30

The air flow is calculated with this formula:

Air Flow Rate $C\ (m^3/h) = V \times N$
V: Volume of the room (m^3)
N: Number of air ventilations

☛ Example:

A bank office of 60 m² and a medium height of 3 m, needs 4 ventilations per hour. Then the airflow is:

$C = 180 \times 4 = 720\ m^3/h$

The correct KPI for this installation is KPI-8021. It has an airflow from 670 to 800 m³/h.

Method 2:

This system is based on the **inhabitants.**

$$\text{Air Flow (m}^3\text{/h) F} = \frac{20 \text{ x A x B}}{CB}$$

20: Constant
AxB:Room Area (m²)
CB: Area ocuppied by each person (m²).
This area area is limited to 10.

Example:

Bank Room 60 m² and 10 people

$$F = \frac{20 \ x \ 60}{60/10} = 200 \ m^3/h$$

The correct KPI for this instalation is: KPI2521

Applicable range of surfaces

If we consider a medium height of 3 m we calculate the surface range which suits KPI for the following air ventilations.

Air Ventilations (N)	Indoor	Air Flow (m³/h)	Room Area (m²)
2	KPI-2521	165-250	27-42
	KPI-5021	350-500	58-83
	KPI-8021	670-800	111-133
	KPI-10021	870-1000	145-167
5	KPI-2521	165-250	11-17
	KPI-5021	350-500	23-33
	KPI-8021	670-800	45-53
	KPI-10021	870-1000	58-67
7	KPI-2521	165-250	8-12
	KPI-5021	350-500	17-24
	KPI-8021	670-800	32-38
	KPI-10021	870-1000	41-48
10	KPI-2521	165-250	5-8
	KPI-5021	350-500	12-17
	KPI-8021	670-800	22-27
	KPI-10021	870-1000	29-33
15	KPI-2521	165-250	4-6
	KPI-5021	350-500	8-11
	KPI-8021	670-800	15-18
	KPI-10021	870-1000	19-22
20	KPI-2521	165-250	3-4
	KPI-5021	350-500	6-8
	KPI-8021	670-800	11-13
	KPI-10021	870-1000	14-17
30	KPI-2521	165-250	2-3
	KPI-5021	350-500	4-6
	KPI-8021	670-800	7-9
	KPI-10021	870-1000	10-11
40	KPI-2521	165-250	1-2
	KPI-5021	350-500	3-4
	KPI-8021	670-800	6-7
	KPI-10021	870-1000	7-8
50	KPI-2521	165-250	1-2
	KPI-5021	350-500	2-3
	KPI-8021	670-800	4-5
	KPI-10021	870-1000	6-7

4.2.2. Calculation of Heat Exchanger Efficiency

In the following process, it will be seen how to obtain the Total Heat Exchanger Efficiency of the KPI, and the way to calculate the Supply Air Temperature.

This scheme could be used:

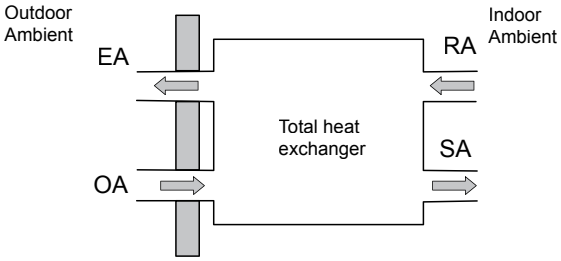

NOTES:

OA: Outdoor Fresh Air
EA: Exhaust Air
SA: Supply Air
RA: Return Air

Air Flow Volume of Supply and Exhaust is the same.

The equations that allow to know the necessary parameters to calculate the operation conditions of the KPI are explained below. First of all, and Energy Balance has to be made.

NOTES:

The Temperature t is given in ºC and DB.

La moisture x in kg_w/kg_a

The Enthalpy i in kJ/kg

η_t can be gotten from the graphic in section 4.8.2.

Looking for the desired air flow, we get the Temperature Exchange Efficiency.

Temperature Exchange Efficiency
(sensible exchange efficiency)

$$\eta_t = \frac{t(AF)-t(AS)}{t(AF)-t(RA)} \times 100\ (\%)$$

Humidity Exchange Efficiency
(Latent Exchange Efficiency)

$$\eta_x = \frac{x(AF)-x(AS)}{x(AF)-x(RA)} \times 100\ (\%)$$

Total Heat Exchange Efficiency
(Enthalpy Exchanger Efficiency)

$$\eta_i = \frac{i(AF)-i(AS)}{i(AF)-i(AR)} \times 100\ (\%)$$

By using the Temperature Exchange Efficiency, the temperature of the Supply Air could be deduced according to the following formula:

$$t(AS) = t(AF)-\eta_t(t(AF)-t(RA))$$

☛ η_t can be gotten from the graphic in section 4.8.2.
Looking for the desired air flow, we get the Temperature Exchange Efficiency.

HITACHI
Inspire the Next

4.3. Econofresh System Selection Procedure

The Econofresh Kit is an accessory that only works together with RPI 5HP. It achieves easy installation and allows the installers and designers forget the additionally installations for the ventilation.

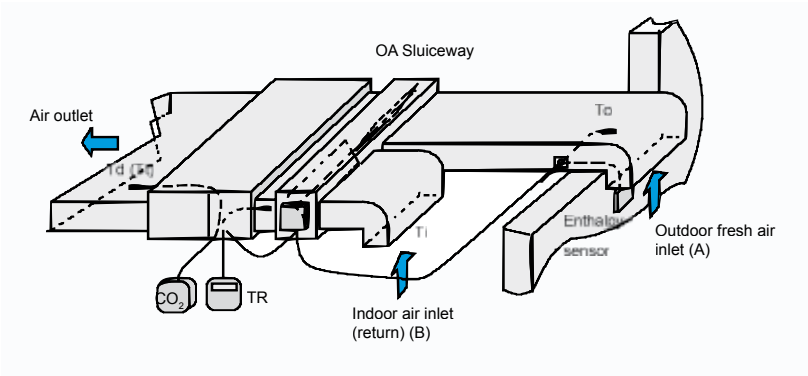

NOTES:

Td (Tt):Indoor Fresh Air Temperature

CO_2: Gas sensor

TR: Adjust temperature with the remote control switch

OA Sluiceway: Outdoor Air Inlet sluiceway

In the installations it is necessary renovate the air to reduce the CO_2 rate in a room, eliminate unpleasant smells, smoke, and pollution, but this fresh air brings about an increase in the power supply. The Econofresh kit achieves to reduce the supply energy. Using this system it is possible to intake the fresh air using the indoor unit fan when the indoor is in thermo-off. Depending of the Outlet Temperature and Inlet Temperature the Econofresh kit works as an intelligent system, allowing in each moment the control of the air pass modifying the position of the Damper.

The Econofresh kit allows working with the CO_2 and Enthalpic Sensors in order to control the quality of the air inside the room.

In the next procedure is going to explain a method to calculate the Econofresh Kit and the advantages that produce using in free cooling system.

First it is a pressure loss of ducts for this installation. This is completely different for each installation. (For more information See the “Pressure Loss data” chart).

These Pressure Loss Charts must be put in the same chart of RPI. High Static Pressure produces a performance curve achieving an Air flow Rate for 0% (B) of fresh air and 100% (A) of fresh air (Free Cooling System). (For Additional information See the “Air Flow Calculation” chart).

NOTES:

P_O: Pressure Loss of Fresh Outdoor Air Duct

P_i: Pressure Loss in Return Air Duct

P_D: Pressure Loss in Air Discharge Duct

P_{ECO}: Pressure Loss for Econofresh kit

$P_A = P_o + P_D + P_{ECO}$

$P_B = P_R + P_D + P_{ECO}$

A: Supply Air Flow when Fresh Outdoor Air damper is fully opened (Return Air Damper is fully closed)

B: Supply Air Flow when Fresh Outdoor Air damper is fully closed (Return Air Damper is fully opened)

P_D:3 mmAq;

P_R: 6 mmAq;

P_0: 13 mmAq;

P_{econo}: 3 mmAq

Pressure Loss Data

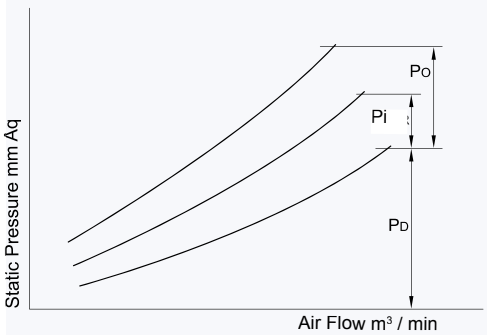

Air Flow Calculation
(RPI 5HP+ Econofresh kit)

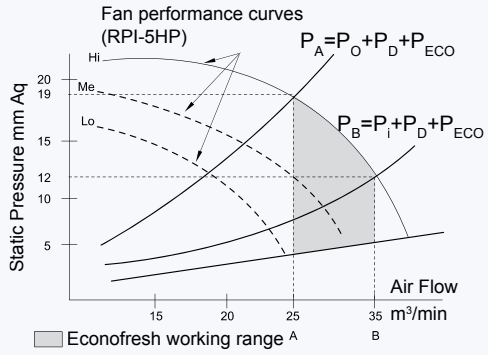

The result of this calculation the Air Flow Rate for (B) is 35 m³/min and for (A) is 25 m³/min.

The energy saving calculation for 25 m³/min (Free cooling mode) is shown below.

4

◆ **Free cooling mode (Economizer)**

Determinate the Maximum Heat Capacity (Free Cooling).

Calculate the capacity by entering the maximum outdoor air flow (Vomax), the room temperature (T_i) and the Outdoor Unit temperature (T_o) into the following formula.

Q_{SHmax} = Vomax x (1-β) x (T_i - T_o) x 0.02
β= 0.2 By pass factor for RPI 5.0 HP
V_{omax} = 25 m³/min
T_i = 25 °C
T_o = 15 °C
Q_{SHmax} = 4.00 kW

This is the maximum capacity that the Econofresh kit in these conditions allows to reduce the power input supply each hour.

◆ **All fresh mode**

The new EconoFresh Kit could also work with the “All-Fresh mode”. In order to configure this mode, you must use the additional E1 function, by configuring it with the remote control switch.

The All-Fresh mode allows Econo-Fresh to work supplying only Outdoor Fresh Air. This is possible because the damper is completely open during this operation mode, while the Indoor Unit is working.

In case of using All-Fresh mode every time, air flow rate will decrease. So, it’s necessary to calculate the Cooling Capacity by using the minimum air flow rate (point A).

This operation mode is really useful for buildings where there is a high density of inhabitants, such as public buildings.

4.4. Nominal Cooling Capacity of the Outdoor Units

The following diagram shows the behavior of the cooling capacity of the outdoor unit with the total power of the combined indoor units up to 130%.

See the examples of the actual combinations.

4.4.1. Characteristic Curve of the Cooling Capacity

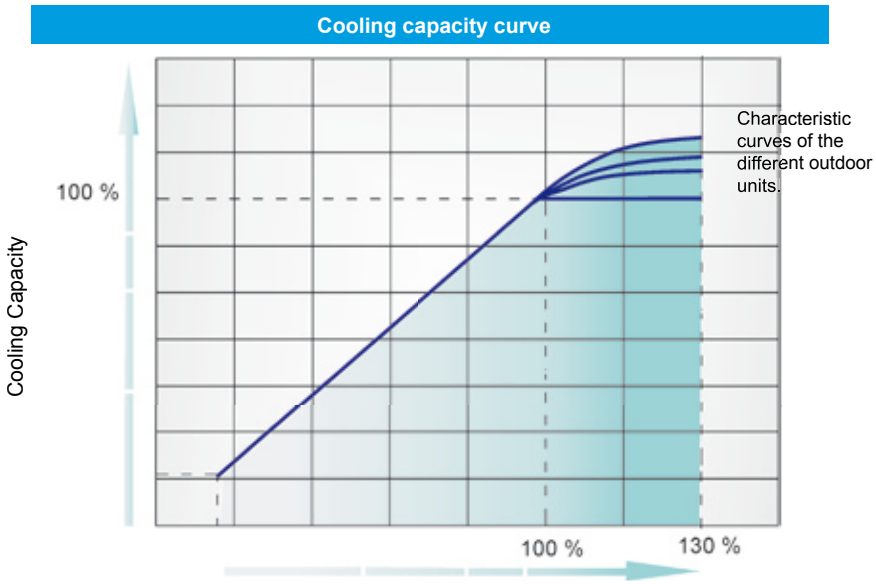

4.4.2. Nominal Cooling Capacity of the Outdoor Units

◆ **Cooling Capacity Tables for FSN(E)**

Nominal capacity at 19°C (Wet Bulb) and 35°C (Dry Bulb)

Total power combined indoor units (%)	Outdoor units HP													
	5		8		10		12		14		16		18	
	Max. capacity	Consumed electrical power	Max. capacity	Consumed electrical power	Max. capacity	Consumed electrical power	Max. capacity	Consumed electrical power	Max. capacity	Consumed electrical power	Max. capacity	Consumed electrical power	Max. capacity	Consumed electrical power
130	14.40	4.84	22.80	7.18	30.40	9.58	36.50	11.50	40.00	14.20	45.00	16.00	51.00	16.10
120	14.30	4.88	22.70	7.27	29.80	9.54	36.10	11.60	40.00	14.40	45.00	16.20	50.89	16.40
110	14.20	4.96	22.60	7.42	29.20	9.57	35.20	11.50	40.00	14.80	45.00	16.60	50.55	16.70
100	14.00	4.65	22.40	6.98	28.00	8.72	33.50	10.60	40.00	14.00	45.00	15.80	50.00	15.70
90	12.60	4.03	20.20	6.03	25.20	7.54	30.20	9.03	36.00	12.10	40.50	13.60	45.00	13.60
80	11.20	3.40	17.90	5.10	22.40	6.37	26.80	7.61	32.00	10.20	36.00	11.50	40.00	11.40
70	9.80	2.99	15.70	4.49	19.60	5.60	23.50	6.70	28.00	8.97	31.50	10.10	35.00	10.10
60	8.40	2.54	13.40	3.82	16.80	4.77	20.10	5.71	24.00	7.67	27.00	8.63	30	8.57
50	7.00	1.87	11.20	2.82	14.00	3.52	16.80	4.21	20.00	5.67	22.50	6.37	25	6.33

Total power combined indoor units (%)	Outdoor units HP													
	20		22		24		26		28		30		32	
	Max. capacity	Consumed electrical power	Max. capacity	Consumed electrical power	Max. capacity	Consumed electrical power	Max. capacity	Consumed electrical power	Max. capacity	Consumed electrical power	Max. capacity	Consumed electrical power	Max. capacity	Consumed electrical power
130	59.80	18.90	63.60	20.10	71.00	23.20	74.90	24.50	80.00	28.60	85.00	30.40	90.00	32.20
120	58.90	19.00	63.50	20.50	70.50	23.50	74.60	24.90	80.00	29.10	85.00	30.90	90.00	32.70
110	57.90	19.10	63.30	20.90	70.00	23.80	74.00	25.20	80.00	29.70	85.00	31.60	90.00	33.50
100	56.00	17.60	63.00	19.80	69.00	22.30	73.00	23.60	80.00	28.30	85.00	30.00	90.00	31.60
90	50.40	15.20	56.70	17.10	62.10	19.30	65.70	20.40	72.00	24.50	76.50	26.00	81.00	27.50
80	44.80	12.80	50.40	14.40	55.20	16.30	58.40	17.80	64.00	20.60	68.00	21.90	72.00	23.20
70	39.20	11.30	44.10	12.70	48.30	14.30	51.10	15.20	56.00	18.20	59.50	19.30	63.00	20.40
60	33.60	9.61	37.80	10.80	41.40	12.20	43.80	12.90	48.00	15.40	51.00	16.40	54.00	17.40
50	28.00	7.09	31.50	7.97	34.50	9.01	36.50	9.53	40.00	11.40	42.50	12.10	45.00	12.80

◆ Cooling Capacity Tables for FXN(E)

Nominal capacity at 19°C (Wet Bulb) and 35°C (Dry Bulb)

Total power combined indoor units (%)	Outdoor Units (HP)											
	8		10		12		16		18		20	
	Max. capacity	Consumed electrical power	Max. capacity	Consumed electrical power	Max. capacity	Consumed electrical power	Max. capacity	Consumed electrical power	Max. capacity	Consumed electrical power	Max. capacity	Consumed electrical power
130	22.80	7.16	30.40	9.67	36.50	12.19	45.00	13.69	51.00	17.74	59.80	18.93
120	22.70	7.25	29.80	9.63	36.10	12.15	45.00	13.93	50.89	17.78	58.90	18.97
110	22.60	7.39	29.20	9.66	35.20	12.19	45.00	14.26	50.55	17.90	57.90	19.10
100	22.40	6.96	28.00	8.80	33.50	11.10	45.00	13.54	50.00	16.44	56.00	17.54
90	20.16	6.02	25.20	7.61	30.20	9.60	40.50	11.70	45.00	14.21	50.40	15.16
80	17.92	5.09	22.40	6.42	26.80	8.10	36.00	9.89	35.00	12.01	44.80	12.81
70	15.68	4.47	19.60	5.65	23.50	7.13	31.50	8.70	35.00	10.56	39.20	11.27
60	13.44	3.81	16.80	4.81	20.10	6.07	27.00	7.40	30.00	9.00	33.60	9.60
50	11.20	2.81	14.00	3.55	16.80	4.48	22.50	5.46	25.00	6.64	28.00	7.08

Total power combined indoor units (%)	Outdoor Units (HP)									
	22		24		26		30		32	
	Max. capacity	Consumed electrical power	Max. capacity	Consumed electrical power	Max. capacity	Consumed electrical power	Max. capacity	Consumed electrical power	Max. capacity	Consumed electrical power
130	63.60	23.20	71.00	23.27	74.10	27.63	85.00	30.30	90.00	34.02
120	63.50	23.25	70.50	23.52	74.60	27.92	85.00	30.83	90.00	34.61
110	63.30	23.41	70.00	23.90	74.00	28.32	85.00	31.57	90.00	35.44
100	63.00	21.50	69.00	22.38	73.00	26.57	85.00	29.98	90.00	33.66
90	56.70	18.59	62.10	19.35	65.70	22.97	76.50	25.92	81.00	29.10
80	50.40	15.70	55.20	16.35	58.40	19.41	68.00	21.90	72.00	24.59
70	44.10	13.82	48.30	14.38	51.10	17.07	59.50	19.26	63.00	21.62
60	37.80	11.77	41.40	12.24	43.80	14.53	51.00	16.39	54.00	18.41
50	31.50	8.68	34.50	9.03	36.50	10.72	42.50	12.10	45.00	13.59

◆ **Cooling Capacity Tables for FSVN(E)**

Nominal capacity at 19°C (Wet Bulb) and 35°C (Dry Bulb)

Total power combined indoor units. (%)	Outdoor units HP					
	3		4		5	
	Max. capacity	Consumed electrical power	Max. capacity	Consumed electrical power	Max. capacity	Consumed electrical power
130	8.50	2.51	11.90	3.57	14.90	4.58
120	8.40	2.49	11.85	3.53	14.80	4.53
110	8.30	2.46	11.65	3.49	14.60	4.48
100	8.00	2.16	10.80	3.07	14.00	3.94
90	7.20	1.90	9.72	2.70	12.60	3.47
80	6.40	1.64	8.64	2.32	11.20	2.98
70	5.60	1.44	7.56	2.04	9.80	2.62
60	4.80	1.22	6.48	1.74	8.40	2.23
50	4.00	1.08	5.40	1.54	7.00	1.97

4.5 Nominal Heating Capacity of the Outdoor Units

The following diagram shows the behavior of the heating capacity of the outdoor unit with the total power of the combined indoor units up to 130%.

4.5.1. Characteristic Curve of the Heating Capacity

Heating capacity curve

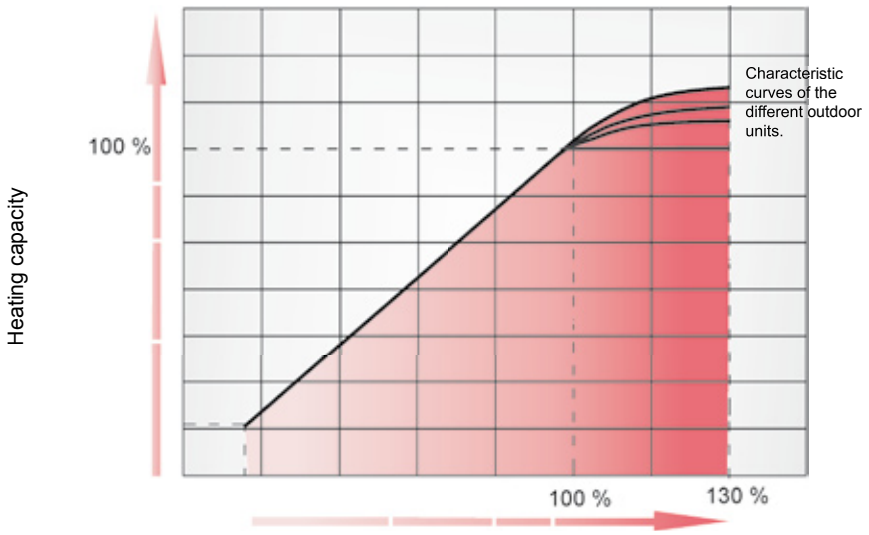

Total Horsepower of Combined Indoor Units

4.5.2. Heating Capacity Tables for Outdoor Units

◆ Heating Capacity Tables for FSN(E) units

Nominal capacity at 20°C (Wet Bulb) and 6°C (Dry Bulb)

Total power combined indoor units (%)	Outdoor units HP													
	5		8		10		12		14		16		18	
	Max. capacity	Consumed electrical power	Max. capacity	Consumed electrical power	Max. capacity	Consumed electrical power	Max. capacity	Consumed electrical power	Max. capacity	Consumed electrical power	Max. capacity	Consumed electrical power	Max. capacity	Consumed electrical power
130	18.50	4.56	30.20	6.85	33.60	8.83	37.50	9.84	45.00	9.22	50.00	10.24	56.00	15.82
120	18.00	4.76	28.90	6.89	33.00	8.79	37.50	10.00	45.00	11.25	50.00	12.50	56.00	15.95
110	17.50	4.60	27.50	6.66	32.50	8.77	37.50	10.11	45.00	11.39	50.00	12.66	56.00	16.18
100	16.00	4.44	25.00	6.13	31.50	8.63	37.50	10.12	45.00	11.57	50.00	12.85	56.00	15.05
90	14.40	4.10	22.50	5.47	28.35	7.71	33.75	9.17	40.50	10.33	45.00	11.48	50.40	13.02
80	12.80	3.85	20.00	4.79	25.20	6.74	30.00	8.02	36.00	9.18	40.00	11.48	44.80	10.98
70	11.20	3.37	17.50	4.24	22.05	5.97	26.25	7.11	31.50	7.99	35.00	8.88	39.20	9.68
60	9.60	2.99	15.00	3.64	18.90	5.13	22.50	6.11	27.00	6.87	30.00	7.64	33.60	8.24
50	8.00	2.53	12.50	3.08	16.00	4.40	18.75	5.15	22.5	5.80	25.00	6.44	28.00	6.70

Total power combined indoor units (%)	Outdoor units HP													
	20		22		24		26		28		30		32	
	Max. capacity	Consumed electrical power	Max. capacity	Consumed electrical power	Max. capacity	Consumed electrical power	Max. capacity	Consumed electrical power	Max. capacity	Consumed electrical power	Max. capacity	Consumed electrical power	Max. capacity	Consumed electrical power
130	64.70	18.28	71.00	20.06	81.30	21.53	85.00	22.49	82.70	26.34	97.10	27.58	100.00	28.40
120	64.30	18.32	71.00	20.23	80.40	20.58	84.43	21.59	92.20	24.78	96.50	25.92	100.00	26.85
110	63.90	18.45	71.00	20.52	79.40	20.59	83.59	21.66	91.31	24.88	96.00	26.13	100.00	27.22
100	63.00	16.94	71.00	19.90	77.50	20.39	82.50	22.73	90.00	23.87	95.00	26.24	100.00	27.62
90	56.70	14.64	63.90	16.51	69.75	18.22	74.26	19.39	81.00	22.25	85.50	23.46	90.00	24.73
80	50.40	12.37	56.80	13.92	62.00	15.93	66.02	16.97	72.00	19.41	76.00	20.51	80.00	21.56
70	44.10	10.88	49.70	12.27	54.25	14.09	57.75	15.00	63.00	17.45	66.50	18.14	70.00	19.39
60	37.80	9.27	42.60	10.44	46.50	12.12	49.54	12.90	54.00	14.79	57.00	15.60	60.00	16.42
50	31.50	7.53	35.50	8.49	38.75	10.22	41.25	10.88	45.00	12.47	47.50	13.15	50.00	13.84

◆ Heating Capacity Tables for FXN(E) units

Nominal capacity at 20°C (Wet Bulb) and 6°C (Dry Bulb)

Total power combined indoor units	Outdoor Units (HP)											
	8		10		12		16		18		20	
	Max. capacity	Consumed electrical power	Max. capacity	Consumed electrical power	Max. capacity	Consumed electrical power	Max. capacity	Consumed electrical power	Max. capacity	Consumed electrical power	Max. capacity	Consumed electrical power
130	30.20	7.00	33.60	9.31	37.50	10.87	50.00	10.79	56.00	13.96	64.70	14.90
120	28.90	7.03	33.00	9.27	37.	10.81	50.00	13.17	56.00	16.22	64.30	17.32
110	27.50	6.80	32.50	9.25	37.50	10.80	50.00	13.34	56.00	16.33	63.90	17.43
100	25.00	6.26	31.50	9.10	37.50	10.62	50.00	13.54	56.00	16.34	63.00	17.44
90	22.50	5.59	28.35	8.13	33.75	9.49	45.00	12.10	50.40	14.60	56.70	15.59
80	20.00	4.90	25.20	7.11	30.00	8.30	40.00	10.58	44.80	12.76	50.40	13.62
70	17.50	4.33	22.05	6.29	26.25	7.11	35.00	9.36	39.20	11.29	44.10	12.05
60	15.00	3.72	18.90	5.41	22.50	6.11	30.00	8.05	33.60	9.71	37.80	10.36
50	12.50	3.14	16.00	4.63	18.75	5.15	25.00	6.78	28.00	8.19	31.50	8.74

4

Total power combined indoor units	Outdoor Units (HP)									
	22		24		26		30		32	
	Max. capacity	Consumed electrical power	Max. capacity	Consumed electrical power	Max. capacity	Consumed electrical power	Max. capacity	Consumed electrical power	Max. capacity	Consumed electrical power
130	71.00	18.24	81.30	22.89	85.00	26.23	97.10	29.30	100.00	30.81
120	71.00	21.19	80.40	21.88	84.43	25.07	96.50	27.54	100.00	28.96
110	71.00	21.33	79.40	21.89	83.59	25.08	96.00	27.77	100.00	29.20
100	71.00	21.34	77.50	21.68	82.50	24.84	95.00	27.88	100.00	29.32
90	63.90	19.07	69.75	19.38	74.26	22.20	85.50	24.92	90.00	26.21
80	56.80	16.67	62.00	16.94	66.02	19.40	76.00	21.79	80.00	22.91
70	49.70	14.75	54.25	14.98	57.75	17.16	66.50	19.27	70.00	20.26
60	42.60	12.68	46.50	12.88	49.54	14.76	57.00	16.58	60.00	17.43
50	35.50	10.70	38.75	10.86	41.25	12.45	47.50	13.97	50.00	14.69

◆ Heating Capacity Tables for FSVN(E) units

Nominal capacity at 20°C (Wet Bulb) and 6°C (Dry Bulb)

Total power combined indoor units (%)	Outdoor units HP					
	3		4		5	
	Max. capacity	Consumed electrical power	Max. capacity	Consumed electrical power	Max. capacity	Consumed electrical power
130	10.20	2.48	14.10	3.21	18.10	4.22
120	10.00	2.58	14.00	3.36	17.90	4.41
110	9.68	2.50	13.50	3.24	17.20	4.26
100	9.00	2.41	12.50	3.13	16.00	4.11
90	8.10	2.23	11.25	2.89	14.40	3.80
80	7.20	2.09	10.00	2.71	12.80	3.56
70	6.30	1.83	8.75	2.38	11.20	3.12
60	5.40	1.62	7.50	2.11	9.60	2.77
50	2.51	1.37	6.25	1.78	8.00	2.34

4.6. Correction Factors

4.6.1. Temperature Correction Factor for Cooling

The correction factors for each percentage are the same for the FSN(E) and FXN(E) models

Total Power of Combined Indoor Units: 130%

Outdoor Air Inlet Dry Bulb Temperature (ºC)	Indoor Air Inlet Wet Bulb Temperature (ºC)													
	14		16		18		19		20		22		24	
	Max. capacity	Consumed electrical power	Max. capacity	Consumed electrical power	Max. capacity	Consumed electrical power	Max. capacity	Consumed electrical power	Max. capacity	Consumed electrical power	Max. capacity	Consumed electrical power	Max. capacity	Consumed electrical power
10	0.89	0.72	0.97	0.74	1.06	0.75	1.10	0.76	1.14	0.77	1.22	0.79	1.31	0.81
12	0.89	0.72	0.97	0.74	1.05	0.75	1.10	0.76	1.14	0.77	1.22	0.79	1.31	0.81
14	0.89	0.73	0.97	0.75	1.05	0.76	1.09	0.77	1.14	0.78	1.22	0.79	1.30	0.82
16	0.89	0.73	0.97	0.75	1.05	0.77	1.09	0.77	1.13	0.78	1.22	0.80	1.30	0.82
18	0.89	0.74	0.97	0.76	1.05	0.78	1.09	0.78	1.13	0.79	1.21	0.82	1.29	0.84
20	0.88	0.76	0.96	0.78	1.04	0.79	1.08	0.80	1.12	0.81	1.20	0.83	1.29	0.85
22	0.88	0.77	0.96	0.79	1.04	0.80	1.08	0.81	1.11	0.82	1.20	0.85	1.28	0.87
24	0.88	0.79	0.95	0.81	1.03	0.82	1.07	0.83	1.11	0.84	1.19	0.87	1.27	0.89
26	0.87	0.81	0.95	0.84	1.02	0.85	1.06	0.86	1.10	0.87	1.18	0.89	1.25	0.91
28	0.87	0.84	0.94	0.86	1.01	0.87	1.05	0.88	1.09	0.89	1.16	0.92	1.24	0.84
30	0.86	0.87	0.93	0.89	1.00	0.90	1.04	0.91	1.07	0.92	1.15	0.95	1.22	0.97
32	0.86	0.90	0.92	0.92	0.99	0.94	1.02	0.94	1.06	0.96	1.13	0.98	1.21	1.01
34	0.85	0.93	0.91	0.95	0.98	0.97	1.01	0.98	1.04	0.99	1.12	1.02	1.19	1.04
35	0.85	0.95	0.91	0.97	0.97	0.99	1.00	1.00	1.04	1.01	1.11	1.04	1.18	1.07
36	0.85	0.97	0.90	0.99	0.96	1.01	0.99	1.09	1.03	1.03	1.10	1.06	1.17	1.09
38	0.84	1.01	0.89	1.03	0.95	1.05	0.98	1.13	1.01	1.07	1.08	1.10	1.15	1.13
40	0.83	1.05	0.88	1.08	0.93	1.09	0.96	1.18	0.99	1.12	1.06	1.15	1.12	1.18

Total Power of Combined Indoor Units: 120%

Outdoor Air Inlet Dry Bulb Temperature (ºC)	Indoor Air Inlet Wet Bulb Temperature (ºC)													
	14		16		18		19		20		22		24	
	Max. capacity	Consumed electrical power	Max. capacity	Consumed electrical power	Max. capacity	Consumed electrical power	Max. capacity	Consumed electrical power	Max. capacity	Consumed electrical power	Max. capacity	Consumed electrical power	Max. capacity	Consumed electrical power
10	0.89	0.76	0.97	0.78	1.04	0.80	1.08	0.80	1.12	0.81	1.21	0.84	1.31	0.86
12	0.89	0.77	0.97	0.79	1.04	0.80	1.07	0.81	1.12	0.82	1.21	0.84	1.30	0.86
14	0.89	0.77	0.96	0.79	1.04	0.81	1.07	0.81	1.12	0.83	1.21	0.85	1.30	0.87
16	0.89	0.78	0.96	0.80	1.03	0.81	1.07	0.82	1.11	0.83	1.21	0.85	1.30	0.88
18	0.89	0.79	0.96	0.81	1.03	0.82	1.06	0.83	1.11	0.84	1.20	0.87	1.29	0.89
20	0.89	0.80	0.95	0.82	1.02	0.84	1.06	0.84	1.10	0.85	1.19	0.88	1.28	0.90
22	0.88	0.82	0.95	0.83	1.02	0.85	1.05	0.86	1.10	0.87	1.19	0.89	1.27	0.92
24	0.88	0.83	0.95	0.85	1.01	0.87	1.05	0.87	1.09	0.89	1.18	0.91	1.26	0.93
26	0.87	0.85	0.94	0.87	1.01	0.88	1.04	0.89	1.08	0.90	1.17	0.93	1.25	0.95
28	0.87	0.87	0.93	0.89	1.00	0.90	1.03	0.91	1.07	0.93	1.15	0.95	1.24	0.97
30	0.86	0.89	0.93	0.91	0.99	0.93	1.02	0.94	1.06	0.95	1.14	0.97	1.22	1.00
32	0.86	0.91	0.92	0.93	0.98	0.95	1.02	0.96	1.05	0.97	1.13	1.00	1.20	1.02
34	0.85	0.94	0.91	0.96	0.97	0.98	1.01	0.99	1.04	1.00	1.11	1.03	1.18	1.05
35	0.85	0.95	0.91	0.97	0.97	0.99	1.00	1.00	1.03	1.01	1.10	1.04	1.17	1.07
36	0.84	0.97	0.90	0.99	0.96	1.01	0.99	1.08	1.03	1.03	1.10	1.06	1.16	1.08
38	0.84	1.00	0.89	1.01	0.95	1.04	0.98	1.12	1.02	1.06	1.08	1.09	1.14	1.12
40	0.83	1.03	0.89	1.05	0.94	1.07	0.97	1.15	1.00	1.09	1.06	1.12	1.12	1.15

Total Power of Combined Indoor Units: 110%

Outdoor Air Inlet Dry Bulb Temperature (ºC)	Indoor Air Inlet Wet Bulb Temperature (ºC)													
	14		16		18		19		20		22		24	
	Max. capacity	Consumed electrical power	Max. capacity	Consumed electrical power	Max. capacity	Consumed electrical power	Max. capacity	Consumed electrical power	Max. capacity	Consumed electrical power	Max. capacity	Consumed electrical power	Max. capacity	Consumed electrical power
10	0.89	0.76	0.97	0.77	1.04	0.78	1.08	0.79	1.12	0.80	1.21	0.82	1.30	0.83
12	0.89	0.76	0.96	0.78	1.04	0.79	1.08	0.80	1.12	0.81	1.21	0.82	1.30	0.84
14	0.88	0.77	0.96	0.78	1.04	0.80	1.08	0.80	1.12	0.81	1.21	0.83	1.29	0.84
16	0.88	0.78	0.96	0.79	1.03	0.81	1.07	0.81	1.12	0.82	1.20	0.84	1.29	0.85
18	0.88	0.78	0.95	0.80	1.03	0.82	1.07	0.82	1.11	0.83	1.20	0.85	1.28	0.87
20	0.87	0.80	0.95	0.81	1.02	0.83	1.06	0.84	1.11	0.84	1.19	0.86	1.28	0.88
22	0.87	0.81	0.94	0.83	1.02	0.84	1.06	0.85	1.10	0.86	1.18	0.88	1.27	0.89
24	0.86	0.83	0.94	0.84	1.01	0.86	1.05	0.87	1.09	0.88	1.17	0.90	1.26	0.91
26	0.85	0.85	0.93	0.86	1.00	0.88	1.04	0.89	1.08	0.90	1.17	0.91	1.25	0.93
28	0.85	0.87	0.92	0.88	1.00	0.90	1.03	0.91	1.07	0.92	1.16	0.94	1.24	0.95
30	0.84	0.89	0.91	0.91	0.99	0.92	1.03	0.93	1.06	0.94	1.14	0.96	1.22	0.98
32	0.83	0.91	0.90	0.93	0.98	0.95	1.02	0.96	1.05	0.97	1.13	0.99	1.21	1.01
34	0.82	0.94	0.90	0.96	0.97	0.98	1.01	0.98	1.04	1.00	1.12	1.02	1.19	1.03
35	0.82	0.95	0.89	0.97	0.96	0.99	1.00	1.00	1.04	1.01	1.11	1.03	1.18	1.05
36	0.81	0.97	0.89	0.98	0.96	1.00	0.99	1.07	1.03	1.02	1.10	1.05	1.17	1.07
38	0.80	1.00	0.88	1.02	0.95	1.04	0.98	1.10	1.02	1.06	1.09	1.07	1.16	1.10
40	0.79	1.03	0.86	1.05	0.93	1.07	0.97	1.13	1.00	1.09	1.07	1.11	1.14	1.13

Total Power of Combined Indoor Units: 100%

Outdoor Air Inlet Dry Bulb Temperature (ºC)	Indoor Air Inlet Wet Bulb Temperature (ºC)													
	14		16		18		19		20		22		24	
	Max. capacity	Consumed electrical power	Max. capacity	Consumed electrical power	Max. capacity	Consumed electrical power	Max. capacity	Consumed electrical power	Max. capacity	Consumed electrical power	Max. capacity	Consumed electrical power	Max. capacity	Consumed electrical power
10	0.91	0.82	0.97	0.83	1.02	0.85	1.05	0.85	1.10	0.85	1.20	0.83	1.30	0.81
12	0.90	0.82	0.96	0.83	1.02	0.85	1.05	0.86	1.10	0.85	1.20	0.83	1.29	0.08
14	0.90	0.82	0.96	0.83	1.02	0.85	1.05	0.86	1.10	0.85	1.19	0.83	1.29	0.81
16	0.90	0.83	0.96	0.84	1.02	0.86	1.05	0.86	1.10	0.85	1.19	0.83	1.28	0.82
18	0.89	0.83	0.95	0.85	1.02	0.86	1.05	0.87	1.09	0.86	1.18	0.84	1.28	0.82
20	0.89	0.84	0.95	0.85	1.01	0.87	1.04	0.88	1.09	0.87	1.18	0.85	1.27	0.83
22	0.89	0.85	0.95	0.86	1.01	0.88	1.04	0.89	1.08	0.88	1.17	0.86	1.25	0.84
24	0.88	0.86	0.94	0.88	1.00	0.89	1.03	0.90	1.08	0.89	1.16	0.87	1.24	0.85
26	0.88	0.87	0.94	0.89	1.00	0.91	1.03	0.91	1.07	0.90	1.15	0.89	1.22	0.87
28	0.87	0.89	0.93	0.91	0.99	0.92	1.02	0.93	1.06	0.92	1.13	0.90	1.21	0.88
30	0.86	0.91	0.93	0.92	0.99	0.94	1.02	0.95	1.05	0.94	1.12	0.92	1.19	0.90
32	0.86	0.92	0.92	0.94	0.98	0.96	1.01	0.97	1.04	0.96	1.10	0.94	1.16	0.92
34	0.85	0.94	0.91	0.96	0.97	0.98	1.00	0.99	1.03	0.98	1.09	0.96	1.14	0.94
35	0.85	0.96	0.91	0.97	0.97	0.99	1.00	1.00	1.03	0.99	1.08	0.97	1.13	0.95
36	0.84	0.97	0.90	0.98	0.97	1.00	1.00	0.96	1.02	1.00	1.07	0.98	1.12	0.96
38	0.83	0.99	0.90	1.01	0.96	1.03	0.99	0.98	1.01	1.03	1.05	1.00	1.09	0.98
40	0.83	1.02	0.89	1.04	0.95	1.06	0.98	1.01	0.99	1.05	1.03	1.03	1.06	1.01

Total Power of Combined Indoor Units: 90%

Outdoor Air Inlet Dry Bulb Temperature (ºC)	Indoor Air Inlet Wet Bulb Temperature (ºC)													
	14		16		18		19		20		22		24	
	Max. capacity	Consumed electrical power	Max. capacity	Consumed electrical power	Max. capacity	Consumed electrical power	Max. capacity	Consumed electrical power	Max. capacity	Consumed electrical power	Max. capacity	Consumed electrical power	Max. capacity	Consumed electrical power
10	0.89	0.82	0.95	0.83	1.02	0.85	1.05	0.85	1.09	0.85	1.18	0.85	1.27	0.85
12	0.89	0.82	0.95	0.84	1.01	0.85	1.05	0.86	1.09	0.86	1.18	0.85	1.27	0.85
14	0.89	0.82	0.95	0.84	1.01	0.85	1.04	0.86	1.09	0.86	1.18	0.85	1.27	0.85
16	0.88	0.83	0.95	0.84	1.01	0.86	1.04	0.86	1.09	0.86	1.17	0.86	1.26	0.86
18	0.88	0.84	0.94	0.85	1.01	0.86	1.04	0.87	1.08	0.87	1.17	0.87	1.26	0.86
20	0.88	0.84	0.94	0.86	1.01	0.87	1.04	0.88	1.08	0.88	1.16	0.87	1.25	0.87
22	0.87	0.85	0.94	0.87	1.00	0.88	1.03	0.89	1.08	0.89	1.16	0.89	1.24	0.88
24	0.87	0.87	0.93	0.88	1.00	0.89	1.03	0.90	1.07	0.90	1.15	0.89	1.23	0.89
26	0.87	0.88	0.93	0.89	0.99	0.91	1.03	0.91	1.06	0.91	1.14	0.91	1.22	0.90
28	0.86	0.89	0.93	0.91	0.99	0.92	1.02	0.93	1.06	0.93	1.13	0.92	1.21	0.92
30	0.86	0.91	0.92	0.92	0.98	0.94	1.02	0.95	1.05	0.95	1.12	0.94	1.19	0.94
32	0.85	0.93	0.92	0.94	0.98	0.96	1.01	0.97	1.04	0.97	1.11	0.96	1.18	0.96
34	0.85	0.95	0.91	0.96	0.97	0.98	1.00	0.99	1.03	0.99	1.10	0.98	1.16	0.98
35	0.84	0.96	0.91	0.98	0.97	0.99	1.00	1.00	1.03	1.00	1.09	0.99	1.15	0.99
36	0.84	0.97	0.91	0.99	0.97	1.00	1.00	1.00	1.03	1.01	1.09	1.00	1.15	1.00
38	0.84	0.99	0.90	1.01	0.97	1.03	1.00	1.02	1.03	1.03	1.08	1.03	1.14	1.02
40	0.84	1.02	0.90	1.03	0.96	1.05	0.99	1.05	1.02	1.06	1.07	1.05	1.12	1.05

Total Power of Combined Indoor Units: 80%

Outdoor Air Inlet Dry Bulb Temperature (ºC)	Indoor Air Inlet Wet Bulb Temperature (ºC)													
	14		16		18		19		20		22		24	
	Max. capacity	Consumed electrical power	Max. capacity	Consumed electrical power	Max. capacity	Consumed electrical power	Max. capacity	Consumed electrical power	Max. capacity	Consumed electrical power	Max. capacity	Consumed electrical power	Max. capacity	Consumed electrical power
10	0.87	0.83	0.94	0.84	1.01	0.85	1.04	0.86	1.08	0.87	1.16	0.88	1.24	0.90
12	0.87	0.83	0.94	0.84	1.01	0.86	1.04	0.86	1.08	0.87	1.16	0.88	1.24	0.90
14	0.87	0.84	0.94	0.85	1.01	0.86	1.04	0.87	1.08	0.87	1.16	0.89	1.24	0.90
16	0.87	0.84	0.93	0.85	1.00	0.86	1.04	0.87	1.08	0.88	1.16	0.89	1.24	0.91
18	0.86	0.84	0.93	0.86	1.00	0.87	1.03	0.88	1.07	0.89	1.15	0.90	1.23	0.92
20	0.86	0.85	0.93	0.87	1.00	0.88	1.03	0.89	1.07	0.89	1.15	0.91	1.23	0.93
22	0.86	0.86	0.93	0.88	1.00	0.89	1.03	0.89	1.07	0.90	1.15	0.92	1.22	0.94
24	0.86	0.88	0.93	0.89	0.99	0.90	1.03	0.91	1.06	0.91	1.14	0.93	1.22	0.95
26	0.86	0.89	0.92	0.90	0.99	0.91	1.02	0.92	1.06	0.93	1.14	0.95	1.21	0.96
28	0.86	0.90	0.92	0.91	0.99	0.93	1.02	0.93	1.06	0.94	1.13	0.96	1.20	0.98
30	0.85	0.92	0.92	0.93	0.98	0.95	1.01	0.95	1.05	0.96	1.12	0.98	1.20	1.00
32	0.85	0.93	0.91	0.95	0.98	0.96	1.01	0.97	1.04	0.98	1.12	1.00	1.19	1.01
34	0.85	0.95	0.91	0.97	0.97	0.98	1.00	0.99	1.04	1.00	1.11	1.02	1.18	1.03
35	0.84	0.96	0.91	0.98	0.97	0.99	1.00	1.00	1.03	1.01	1.11	1.03	1.18	1.05
36	0.84	0.97	0.90	0.99	0.97	1.00	1.00	1.06	1.03	1.02	1.10	1.04	1.17	1.06
38	0.84	1.00	0.90	1.01	0.96	1.03	0.99	1.08	1.03	1.04	1.09	1.06	1.16	1.08
40	0.83	1.02	0.89	1.04	0.95	1.05	0.98	1.11	1.02	1.07	1.08	1.09	1.15	1.11

Total Power of Combined Indoor Units: 70%

Outdoor Air Inlet Dry Bulb Temperature (ºC)	Indoor Air Inlet Wet Bulb Temperature (ºC)													
	14		16		18		19		20		22		24	
	Max. capacity	Consumed electrical power	Max. capacity	Consumed electrical power	Max. capacity	Consumed electrical power	Max. capacity	Consumed electrical power	Max. capacity	Consumed electrical power	Max. capacity	Consumed electrical power	Max. capacity	Consumed electrical power
10	0.87	0.79	0.94	0.82	1.01	0.84	1.04	0.86	1.08	0.86	1.16	0.86	1.24	0.87
12	0.87	0.80	0.94	0.82	1.01	0.85	1.04	0.86	1.08	0.86	1.16	0.86	1.23	0.87
14	0.86	0.80	0.93	0.83	1.00	0.85	1.04	0.86	1.08	0.86	1.16	0.87	1.23	0.87
16	0.86	0.80	0.93	0.83	1.00	0.85	1.04	0.87	1.08	0.87	1.15	0.87	1.23	0.88
18	0.86	0.81	0.93	0.83	1.00	0.86	1.04	0.87	1.07	0.88	1.15	0.88	1.23	0.89
20	0.86	0.82	0.93	0.84	1.00	0.87	1.03	0.88	1.07	0.88	1.15	0.89	1.22	0.89
22	0.86	0.83	0.93	0.85	1.00	0.88	1.03	0.89	1.07	0.89	1.14	0.90	1.22	0.90
24	0.85	0.84	0.92	0.86	0.99	0.89	1.03	0.90	1.06	0.91	1.14	0.91	1.21	0.92
26	0.85	0.85	0.92	0.88	0.99	0.90	1.02	0.92	1.06	0.92	1.13	0.92	1.21	0.93
28	0.85	0.86	0.92	0.89	0.98	0.92	1.02	0.93	1.05	0.94	1.13	0.94	1.20	0.94
30	0.84	0.88	0.91	0.91	0.98	0.93	1.01	0.95	1.05	0.95	1.12	0.95	1.19	0.96
32	0.84	0.89	0.91	0.92	0.98	0.95	1.01	0.96	1.04	0.97	1.12	0.97	1.19	0.98
34	0.84	0.91	0.90	0.94	0.97	0.97	1.00	0.98	1.04	0.99	1.11	0.99	1.18	1.00
35	0.83	0.93	0.90	0.95	0.97	0.98	1.00	1.00	1.03	1.00	1.10	1.01	1.17	1.01
36	0.83	0.93	0.90	0.96	0.96	0.99	1.00	1.02	1.03	1.01	1.10	1.01	1.17	1.02
38	0.83	0.95	0.89	0.98	0.96	1.01	0.99	1.04	1.03	1.03	1.09	1.04	1.16	1.04
40	0.82	0.98	0.89	1.01	0.95	1.04	0.99	1.07	1.02	1.06	1.09	1.06	1.16	1.07

Total Power of Combined Indoor Units: 60%

Outdoor Air Inlet Dry Bulb Temperature (ºC)	Indoor Air Inlet Wet Bulb Temperature (ºC)													
	14		16		18		19		20		22		24	
	Max. capacity	Consumed electrical power	Max. capacity	Consumed electrical power	Max. capacity	Consumed electrical power	Max. capacity	Consumed electrical power	Max. capacity	Consumed electrical power	Max. capacity	Consumed electrical power	Max. capacity	Consumed electrical power
10	0.85	0.76	0.92	0.81	1.00	0.85	1.04	0.87	1.08	0.86	1.16	0.85	1.24	0.84
12	0.85	0.77	0.93	0.81	1.00	0.85	1.04	0.87	1.08	0.86	1.16	0.85	1.24	0.84
14	0.85	0.77	0.93	0.81	1.00	0.85	1.04	0.87	1.08	0.87	1.16	0.86	1.24	0.84
16	0.86	0.77	0.93	0.81	1.00	0.86	1.04	0.87	1.07	0.87	1.15	0.86	1.23	0.85
18	0.86	0.78	0.93	0.82	1.00	0.86	1.03	0.88	1.07	0.88	1.15	0.87	1.23	0.86
20	0.86	0.79	0.93	0.83	1.00	0.87	1.03	0.89	1.07	0.89	1.15	0.87	1.22	0.86
22	0.86	0.79	0.93	0.84	0.99	0.88	1.03	0.90	1.07	0.89	1.14	0.88	1.22	0.87
24	0.86	0.81	0.93	0.85	0.99	0.89	1.02	0.91	1.06	0.90	1.14	0.89	1.21	0.89
26	0.86	0.81	0.92	0.86	0.99	0.90	1.02	0.92	1.06	0.92	1.14	0.91	1.21	0.90
28	0.86	0.83	0.92	0.87	0.98	0.92	1.02	0.94	1.05	0.93	1.13	0.92	1.21	0.91
30	0.86	0.84	0.92	0.89	0.98	0.93	1.01	0.95	1.05	0.95	1.13	0.94	1.21	0.93
32	0.85	0.86	0.91	0.90	0.98	0.95	1.01	0.97	1.05	0.97	1.12	0.95	1.20	0.94
34	0.85	0.87	0.91	0.92	0.97	0.97	1.00	0.99	1.04	0.98	1.12	0.97	1.20	0.96
35	0.85	0.88	0.91	0.93	0.97	0.98	1.00	1.00	1.04	1.00	1.12	0.98	1.20	0.97
36	0.84	0.89	0.90	0.94	0.97	0.99	1.00	0.98	1.04	1.01	1.12	1.00	1.20	0.98
38	0.84	0.91	0.90	0.96	0.96	1.01	0.99	1.00	1.03	1.03	1.11	1.02	1.20	1.00
40	0.83	0.94	0.89	0.98	0.95	1.03	0.99	1.03	1.03	1.05	1.11	1.04	1.19	1.03

Total Power of Combined Indoor Units: 50%

Outdoor Air Inlet Dry Bulb Temperature (ºC)	Indoor Air Inlet Wet Bulb Temperature (ºC)													
	14		16		18		19		20		22		24	
	Max. capacity	Consumed electrical power	Max. capacity	Consumed electrical power	Max. capacity	Consumed electrical power	Max. capacity	Consumed electrical power	Max. capacity	Consumed electrical power	Max. capacity	Consumed electrical power	Max. capacity	Consumed electrical power
10	0.85	0.90	0.92	0.91	1.00	0.92	1.04	0.93	1.08	0.93	1.16	0.93	1.24	0.94
12	0.85	0.91	0.93	0.92	1.00	0.93	1.04	0.94	1.08	0.94	1.16	0.94	1.24	0.94
14	0.85	0.91	0.93	0.92	1.00	0.94	1.04	0.94	1.08	0.94	1.16	0.95	1.24	0.95
16	0.86	0.92	0.93	0.93	1.00	0.94	1.04	0.95	1.07	0.95	1.15	0.95	1.23	0.96
18	0.86	0.92	0.93	0.94	1.00	0.95	1.03	0.96	1.07	0.96	1.15	0.96	1.23	0.96
20	0.86	0.93	0.93	0.94	1.00	0.96	1.03	0.97	1.07	0.97	1.15	0.97	1.22	0.97
22	0.86	0.94	0.93	0.95	0.99	0.96	1.03	0.97	1.07	0.97	1.14	0.97	1.22	0.97
24	0.86	0.94	0.93	0.96	0.99	0.97	1.02	0.97	1.06	0.98	1.14	0.98	1.21	0.98
26	0.86	0.95	0.92	0.96	0.99	0.97	1.02	0.98	1.06	0.98	1.14	0.98	1.21	0.99
28	0.86	0.95	0.92	0.97	0.98	0.98	1.02	0.99	1.05	0.99	1.13	0.99	1.21	0.99
30	0.86	0.96	0.92	0.97	0.98	0.98	1.01	0.99	1.05	0.99	1.13	0.99	1.21	1.00
32	0.85	0.96	0.91	0.97	0.98	0.99	1.01	1.00	1.05	1.00	1.12	1.00	1.20	1.00
34	0.85	0.97	0.91	0.98	0.97	0.99	1.00	1.00	1.04	1.00	1.12	1.00	1.20	1.00
35	0.85	0.97	0.91	0.98	0.97	0.99	1.00	1.00	1.04	1.00	1.12	1.00	1.20	1.00
36	0.84	0.97	0.90	0.98	0.97	1.00	1.00	1.01	1.04	1.00	1.12	1.00	1.20	1.01
38	0.84	0.97	0.90	0.98	0.96	1.00	0.99	1.01	1.03	1.01	1.11	1.01	1.20	1.01
40	0.83	0.97	0.89	0.99	0.95	1.00	0.99	1.01	1.03	1.01	1.11	1.01	1.19	1.01

◆ Correction Factors for FSVN(E)

Total Power of Combined Indoor Units: 130%

Outdoor Air Inlet Dry Bulb Temperature (ºC)	Indoor Air Inlet Wet Bulb Temperature (ºC)													
	14		16		18		19		20		22		24	
	Max. capacity	Consumed electrical power	Max. capacity	Consumed electrical power	Max. capacity	Consumed electrical power	Max. capacity	Consumed electrical power	Max. capacity	Consumed electrical power	Max. capacity	Consumed electrical power	Max. capacity	Consumed electrical power
10	0.81	0.72	0.85	0.74	0.96	0.75	1.00	0.76	1.07	0.77	1.08	0.79	1.19	0.81
12	0.81	0.72	0.85	0.74	0.96	0.75	1.00	0.76	1.07	0.77	1.08	0.79	1.19	0.81
14	0.81	0.73	0.85	0.75	0.96	0.76	1.00	0.77	1.07	0.78	1.08	0.79	1.19	0.82
16	0.81	0.73	0.85	0.75	0.96	0.77	1.00	0.77	1.07	0.78	1.08	0.80	1.19	0.82
18	0.81	0.74	0.85	0.76	0.96	0.78	1.00	0.78	1.07	0.79	1.08	0.82	1.19	0.84
20	0.81	0.76	0.85	0.78	0.96	0.79	1.00	0.80	1.07	0.81	1.08	0.83	1.19	0.85
22	0.81	0.77	0.85	0.79	0.96	0.80	1.00	0.81	1.07	0.82	1.08	0.85	1.19	0.87
24	0.81	0.79	0.85	0.81	0.96	0.82	1.00	0.83	1.07	0.84	1.08	0.87	1.19	0.89
26	0.81	0.81	0.85	0.84	0.96	0.85	1.00	0.86	1.07	0.87	1.08	0.89	1.19	0.91
28	0.81	0.84	0.85	0.86	0.96	0.87	1.00	0.88	1.07	0.89	1.08	0.92	1.19	0.84
30	0.81	0.87	0.85	0.89	0.96	0.90	1.00	0.91	1.07	0.92	1.08	0.95	1.19	0.97
32	0.81	0.90	0.85	0.92	0.96	0.94	1.00	0.94	1.07	0.96	1.08	0.98	1.19	1.01
34	0.81	0.93	0.85	0.95	0.96	0.97	1.00	0.98	1.07	0.99	1.08	1.02	1.19	1.04
35	0.81	0.95	0.85	0.97	0.96	0.99	1.00	1.00	1.07	1.01	1.08	1.04	1.19	1.07
36	0.79	0.97	0.86	0.99	0.96	1.01	1.01	1.09	1.06	1.03	1.08	1.06	1.18	1.09
38	0.77	1.01	0.88	1.03	0.98	1.05	1.02	1.13	1.05	1.07	1.07	1.10	1.17	1.13
40	0.74	1.05	0.90	1.08	0.99	1.09	1.04	1.18	1.04	1.12	1.06	1.15	1.16	1.18

Total Power of Combined Indoor Units: 120%

Outdoor Air Inlet Dry Bulb Temperature (ºC)	Indoor Air Inlet Wet Bulb Temperature (ºC)													
	14		16		18		19		20		22		24	
	Max. capacity	Consumed electrical power	Max. capacity	Consumed electrical power	Max. capacity	Consumed electrical power	Max. capacity	Consumed electrical power	Max. capacity	Consumed electrical power	Max. capacity	Consumed electrical power	Max. capacity	Consumed electrical power
10	0.81	0.76	0.85	0.78	0.96	0.80	1.00	0.80	1.07	0.81	1.08	0.84	1.19	0.86
12	0.81	0.77	0.85	0.79	0.96	0.80	1.00	0.81	1.07	0.82	1.08	0.84	1.19	0.86
14	0.81	0.77	0.85	0.79	0.96	0.81	1.00	0.81	1.07	0.83	1.08	0.85	1.19	0.87
16	0.81	0.78	0.85	0.80	0.96	0.81	1.00	0.82	1.07	0.83	1.08	0.85	1.19	0.88
18	0.81	0.79	0.85	0.81	0.96	0.82	1.00	0.83	1.07	0.84	1.08	0.87	1.19	0.89
20	0.81	0.80	0.85	0.82	0.96	0.84	1.00	0.84	1.07	0.85	1.08	0.88	1.19	0.90
22	0.81	0.82	0.85	0.83	0.96	0.85	1.00	0.86	1.07	0.87	1.08	0.89	1.19	0.92
24	0.81	0.83	0.85	0.85	0.96	0.87	1.00	0.87	1.07	0.89	1.08	0.91	1.19	0.93
26	0.81	0.85	0.85	0.87	0.96	0.88	1.00	0.89	1.07	0.90	1.08	0.93	1.19	0.95
28	0.81	0.87	0.85	0.89	0.96	0.90	1.00	0.91	1.07	0.93	1.08	0.95	1.19	0.97
30	0.81	0.89	0.85	0.91	0.96	0.93	1.00	0.94	1.07	0.95	1.08	0.97	1.19	1.00
32	0.81	0.91	0.85	0.93	0.96	0.95	1.00	0.96	1.07	0.97	1.08	1.00	1.19	1.02
34	0.81	0.94	0.85	0.96	0.96	0.98	1.00	0.99	1.07	1.00	1.08	1.03	1.19	1.05
35	0.81	0.95	0.85	0.97	0.96	0.99	1.00	1.00	1.07	1.01	1.08	1.04	1.19	1.07
36	0.79	0.97	0.86	0.99	0.96	1.01	1.01	1.08	1.06	1.03	1.08	1.06	1.18	1.08
38	0.77	1.00	0.88	1.01	0.98	1.04	1.02	1.12	1.05	1.06	1.07	1.09	1.17	1.12
40	0.74	1.03	0.90	1.05	0.99	1.07	1.04	1.15	1.04	1.09	1.06	1.12	1.16	1.15

Total Power of Combined Indoor Units: 110%

Outdoor Air Inlet Dry Bulb Temperature (ºC)	Indoor Air Inlet Wet Bulb Temperature (ºC)													
	14		16		18		19		20		22		24	
	Max. capacity	Consumed electrical power	Max. capacity	Consumed electrical power	Max. capacity	Consumed electrical power	Max. capacity	Consumed electrical power	Max. capacity	Consumed electrical power	Max. capacity	Consumed electrical power	Max. capacity	Consumed electrical power
10	0.81	0.76	0.85	0.77	0.96	0.78	1.00	0.79	1.07	0.80	1.08	0.82	1.19	0.83
12	0.81	0.76	0.85	0.78	0.96	0.79	1.00	0.80	1.07	0.81	1.08	0.82	1.19	0.84
14	0.81	0.77	0.85	0.78	0.96	0.80	1.00	0.80	1.07	0.81	1.08	0.83	1.19	0.84
16	0.81	0.78	0.85	0.79	0.96	0.81	1.00	0.81	1.07	0.82	1.08	0.84	1.19	0.85
18	0.81	0.78	0.85	0.80	0.96	0.82	1.00	0.82	1.07	0.83	1.08	0.85	1.19	0.87
20	0.81	0.80	0.85	0.81	0.96	0.83	1.00	0.84	1.07	0.84	1.08	0.86	1.19	0.88
22	0.81	0.81	0.85	0.83	0.96	0.84	1.00	0.85	1.07	0.86	1.08	0.88	1.19	0.89
24	0.81	0.83	0.85	0.84	0.96	0.86	1.00	0.87	1.07	0.88	1.08	0.90	1.19	0.91
26	0.81	0.85	0.85	0.86	0.96	0.88	1.00	0.89	1.07	0.90	1.08	0.91	1.19	0.93
28	0.81	0.87	0.85	0.88	0.96	0.90	1.00	0.91	1.07	0.92	1.08	0.94	1.19	0.95
30	0.81	0.89	0.85	0.91	0.96	0.92	1.00	0.93	1.07	0.94	1.08	0.96	1.19	0.98
32	0.81	0.91	0.85	0.93	0.96	0.95	1.00	0.96	1.07	0.97	1.08	0.99	1.19	1.01
34	0.81	0.94	0.85	0.96	0.96	0.98	1.00	0.98	1.07	1.00	1.08	1.02	1.19	1.03
35	0.81	0.95	0.85	0.97	0.96	0.99	1.00	1.00	1.07	1.01	1.08	1.03	1.19	1.05
36	0.79	0.97	0.86	0.98	0.96	1.00	1.01	1.07	1.06	1.02	1.08	1.05	1.18	1.07
38	0.77	1.00	0.88	1.02	0.98	1.04	1.02	1.10	1.05	1.06	1.07	1.07	1.17	1.10
40	0.74	1.03	0.90	1.05	0.99	1.07	1.04	1.13	1.04	1.09	1.06	1.11	1.16	1.13

Total Power of Combined Indoor Units: 100%

Outdoor Air Inlet Dry Bulb Temperature (ºC)	Indoor Air Inlet Wet Bulb Temperature (ºC)													
	14		16		18		19		20		22		24	
	Max. capacity	Consumed electrical power	Max. capacity	Consumed electrical power	Max. capacity	Consumed electrical power	Max. capacity	Consumed electrical power	Max. capacity	Consumed electrical power	Max. capacity	Consumed electrical power	Max. capacity	Consumed electrical power
10	0.81	0.82	0.85	0.83	0.96	0.85	1.00	0.85	1.07	0.84	1.08	0.83	1.19	0.81
12	0.81	0.82	0.85	0.83	0.96	0.85	1.00	0.86	1.07	0.85	1.08	0.83	1.19	0.82
14	0.81	0.82	0.85	0.83	0.96	0.85	1.00	0.86	1.07	0.85	1.08	0.83	1.19	0.81
16	0.81	0.83	0.85	0.84	0.96	0.86	1.00	0.86	1.07	0.85	1.08	0.83	1.19	0.82
18	0.81	0.83	0.85	0.84	0.96	0.86	1.00	0.87	1.07	0.86	1.08	0.84	1.19	0.82
20	0.81	0.84	0.85	0.85	0.96	0.87	1.00	0.88	1.07	0.87	1.08	0.85	1.19	0.83
22	0.81	0.85	0.85	0.86	0.96	0.88	1.00	0.89	1.07	0.88	1.08	0.86	1.19	0.84
24	0.81	0.86	0.85	0.88	0.96	0.89	1.00	0.90	1.07	0.89	1.08	0.87	1.19	0.85
26	0.81	0.87	0.85	0.89	0.96	0.91	1.00	0.92	1.07	0.90	1.08	0.89	1.19	0.87
28	0.81	0.89	0.85	0.91	0.96	0.92	1.00	0.93	1.07	0.92	1.08	0.90	1.19	0.88
30	0.81	0.91	0.85	0.92	0.96	0.94	1.00	0.95	1.07	0.94	1.08	0.92	1.19	0.90
32	0.81	0.93	0.85	0.94	0.96	0.96	1.00	0.97	1.07	0.96	1.08	0.94	1.19	0.92
34	0.81	0.94	0.85	0.96	0.96	0.98	1.00	0.99	1.07	0.98	1.08	0.96	1.19	0.93
35	0.81	0.96	0.85	0.97	0.96	0.99	1.00	1.00	1.07	0.99	1.08	0.97	1.19	0.95
36	0.79	0.97	0.86	0.98	0.96	1.00	1.01	0.96	1.06	1.00	1.08	0.98	1.18	0.96
38	0.77	0.99	0.88	1.01	0.98	1.03	1.02	0.98	1.05	1.03	1.07	1.00	1.17	0.98
40	0.74	1.02	0.90	1.04	0.99	1.06	1.04	1.01	1.04	1.06	1.06	1.03	1.16	1.01

Total Power of Combined Indoor Units: 90%

Outdoor Air Inlet Dry Bulb Temperature (ºC)	Indoor Air Inlet Wet Bulb Temperature (ºC)													
	14		16		18		19		20		22		24	
	Max. capacity	Consumed electrical power	Max. capacity	Consumed electrical power	Max. capacity	Consumed electrical power	Max. capacity	Consumed electrical power	Max. capacity	Consumed electrical power	Max. capacity	Consumed electrical power	Max. capacity	Consumed electrical power
10	0.81	0.82	0.85	0.83	0.96	0.85	1.00	0.85	1.07	0.85	1.08	0.85	1.19	0.85
12	0.81	0.82	0.85	0.84	0.96	0.85	1.00	0.86	1.07	0.86	1.08	0.85	1.19	0.85
14	0.81	0.82	0.85	0.84	0.96	0.85	1.00	0.86	1.07	0.86	1.08	0.85	1.19	0.85
16	0.81	0.83	0.85	0.84	0.96	0.86	1.00	0.86	1.07	0.86	1.08	0.86	1.19	0.86
18	0.81	0.84	0.85	0.85	0.96	0.86	1.00	0.87	1.07	0.87	1.08	0.87	1.19	0.86
20	0.81	0.84	0.85	0.86	0.96	0.87	1.00	0.88	1.07	0.88	1.08	0.87	1.19	0.87
22	0.81	0.85	0.85	0.87	0.96	0.88	1.00	0.89	1.07	0.89	1.08	0.89	1.19	0.88
24	0.81	0.87	0.85	0.88	0.96	0.89	1.00	0.90	1.07	0.90	1.08	0.89	1.19	0.89
26	0.81	0.88	0.85	0.89	0.96	0.91	1.00	0.91	1.07	0.91	1.08	0.91	1.19	0.90
28	0.81	0.89	0.85	0.91	0.96	0.92	1.00	0.93	1.07	0.93	1.08	0.92	1.19	0.92
30	0.81	0.91	0.85	0.92	0.96	0.94	1.00	0.95	1.07	0.95	1.08	0.94	1.19	0.94
32	0.81	0.93	0.85	0.94	0.96	0.96	1.00	0.97	1.07	0.97	1.08	0.96	1.19	0.96
34	0.81	0.95	0.85	0.96	0.96	0.98	1.00	0.99	1.07	0.99	1.08	0.98	1.19	0.98
35	0.81	0.96	0.85	0.98	0.96	0.99	1.00	1.00	1.07	1.00	1.08	0.99	1.19	0.99
36	0.79	0.97	0.86	0.99	0.96	1.00	1.01	1.00	1.06	1.01	1.08	1.00	1.18	1.00
38	0.77	0.99	0.88	1.01	0.98	1.03	1.02	1.02	1.05	1.03	1.07	1.03	1.17	1.02
40	0.74	1.02	0.90	1.03	0.99	1.05	1.04	1.05	1.04	1.06	1.06	1.05	1.16	1.05

Total Power of Combined Indoor Units: 80%

Outdoor Air Inlet Dry Bulb Temperature (ºC)	Indoor Air Inlet Wet Bulb Temperature (ºC)													
	14		16		18		19		20		22		24	
	Max. capacity	Consumed electrical power	Max. capacity	Consumed electrical power	Max. capacity	Consumed electrical power	Max. capacity	Consumed electrical power	Max. capacity	Consumed electrical power	Max. capacity	Consumed electrical power	Max. capacity	Consumed electrical power
10	0.81	0.83	0.85	0.84	0.96	0.85	1.00	0.86	1.07	0.87	1.08	0.88	1.19	0.90
12	0.81	0.83	0.85	0.84	0.96	0.86	1.00	0.86	1.07	0.87	1.08	0.88	1.19	0.90
14	0.81	0.84	0.85	0.85	0.96	0.86	1.00	0.87	1.07	0.87	1.08	0.89	1.19	0.90
16	0.81	0.84	0.85	0.85	0.96	0.86	1.00	0.87	1.07	0.88	1.08	0.89	1.19	0.91
18	0.81	0.84	0.85	0.86	0.96	0.87	1.00	0.88	1.07	0.89	1.08	0.90	1.19	0.92
20	0.81	0.85	0.85	0.87	0.96	0.88	1.00	0.89	1.07	0.89	1.08	0.91	1.19	0.93
22	0.81	0.86	0.85	0.88	0.96	0.89	1.00	0.89	1.07	0.90	1.08	0.92	1.19	0.94
24	0.81	0.88	0.85	0.89	0.96	0.90	1.00	0.91	1.07	0.91	1.08	0.93	1.19	0.95
26	0.81	0.89	0.85	0.90	0.96	0.91	1.00	0.92	1.07	0.93	1.08	0.95	1.19	0.96
28	0.81	0.90	0.85	0.91	0.96	0.93	1.00	0.93	1.07	0.94	1.08	0.96	1.19	0.98
30	0.81	0.92	0.85	0.93	0.96	0.95	1.00	0.95	1.07	0.96	1.08	0.98	1.19	1.00
32	0.81	0.93	0.85	0.95	0.96	0.96	1.00	0.97	1.07	0.98	1.08	1.00	1.19	1.01
34	0.81	0.95	0.85	0.97	0.96	0.98	1.00	0.99	1.07	1.00	1.08	1.02	1.19	1.03
35	0.81	0.96	0.85	0.98	0.96	0.99	1.00	1.00	1.07	1.01	1.08	1.03	1.19	1.05
36	0.79	0.97	0.86	0.99	0.96	1.00	1.01	1.06	1.06	1.02	1.08	1.04	1.18	1.06
38	0.77	1.00	0.88	1.01	0.98	1.03	1.02	1.08	1.05	1.04	1.07	1.06	1.17	1.08
40	0.74	1.02	0.90	1.04	0.99	1.05	1.04	1.11	1.04	1.07	1.06	1.09	1.16	1.11

Total Power of Combined Indoor Units: 70%

Outdoor Air Inlet Dry Bulb Temperature (ºC)	Indoor Air Inlet Wet Bulb Temperature (ºC)													
	14		16		18		19		20		22		24	
	Max. capacity	Consumed electrical power	Max. capacity	Consumed electrical power	Max. capacity	Consumed electrical power	Max. capacity	Consumed electrical power	Max. capacity	Consumed electrical power	Max. capacity	Consumed electrical power	Max. capacity	Consumed electrical power
10	0.81	0.90	0.85	0.91	0.96	0.92	1.00	0.93	1.07	0.93	1.08	0.93	1.19	0.94
12	0.81	0.91	0.85	0.92	0.96	0.93	1.00	0.94	1.07	0.94	1.08	0.94	1.19	0.94
14	0.81	0.91	0.85	0.92	0.96	0.94	1.00	0.94	1.07	0.94	1.08	0.95	1.19	0.95
16	0.81	0.92	0.85	0.93	0.96	0.94	1.00	0.95	1.07	0.95	1.08	0.95	1.19	0.96
18	0.81	0.92	0.85	0.94	0.96	0.95	1.00	0.96	1.07	0.96	1.08	0.96	1.19	0.96
20	0.81	0.93	0.85	0.94	0.96	0.96	1.00	0.97	1.07	0.97	1.08	0.97	1.19	0.97
22	0.81	0.94	0.85	0.95	0.96	0.96	1.00	0.97	1.07	0.97	1.08	0.97	1.19	0.97
24	0.81	0.94	0.85	0.96	0.96	0.97	1.00	0.97	1.07	0.98	1.08	0.98	1.19	0.98
26	0.81	0.95	0.85	0.96	0.96	0.97	1.00	0.98	1.07	0.98	1.08	0.98	1.19	0.99
28	0.81	0.95	0.85	0.97	0.96	0.98	1.00	0.99	1.07	0.99	1.08	0.99	1.19	0.99
30	0.81	0.96	0.85	0.97	0.96	0.98	1.00	0.99	1.07	0.99	1.08	0.99	1.19	1.00
32	0.81	0.96	0.85	0.97	0.96	0.99	1.00	1.00	1.07	1.00	1.08	1.00	1.19	1.00
34	0.81	0.97	0.85	0.98	0.96	0.99	1.00	1.00	1.07	1.00	1.08	1.00	1.19	1.00
35	0.81	0.97	0.85	0.98	0.96	0.99	1.00	1.00	1.07	1.00	1.08	1.00	1.19	1.00
36	0.79	0.97	0.86	0.98	0.96	1.00	1.01	1.01	1.06	1.00	1.08	1.00	1.18	1.01
38	0.77	0.97	0.88	0.98	0.98	1.00	1.02	1.01	1.05	1.01	1.07	1.01	1.17	1.01
40	0.74	0.97	0.90	0.99	0.99	1.00	1.04	1.01	1.04	1.01	1.06	1.01	1.16	1.01

Total Power of Combined Indoor Units: 60%

Outdoor Air Inlet Dry Bulb Temperature (ºC)	Indoor Air Inlet Wet Bulb Temperature (ºC)													
	14		16		18		19		20		22		24	
	Max. capacity	Consumed electrical power	Max. capacity	Consumed electrical power	Max. capacity	Consumed electrical power	Max. capacity	Consumed electrical power	Max. capacity	Consumed electrical power	Max. capacity	Consumed electrical power	Max. capacity	Consumed electrical power
10	0.81	0.76	0.85	0.81	0.96	0.85	1.00	0.87	1.07	0.86	1.08	0.85	1.19	0.84
12	0.81	0.77	0.85	0.81	0.96	0.85	1.00	0.87	1.07	0.86	1.08	0.85	1.19	0.84
14	0.81	0.77	0.85	0.81	0.96	0.85	1.00	0.87	1.07	0.87	1.08	0.86	1.19	0.84
16	0.81	0.77	0.85	0.81	0.96	0.86	1.00	0.87	1.07	0.87	1.08	0.86	1.19	0.85
18	0.81	0.78	0.85	0.82	0.96	0.86	1.00	0.88	1.07	0.88	1.08	0.87	1.19	0.86
20	0.81	0.79	0.85	0.83	0.96	0.87	1.00	0.89	1.07	0.89	1.08	0.87	1.19	0.86
22	0.81	0.79	0.85	0.84	0.96	0.88	1.00	0.90	1.07	0.89	1.08	0.88	1.19	0.87
24	0.81	0.81	0.85	0.85	0.96	0.89	1.00	0.91	1.07	0.90	1.08	0.89	1.19	0.89
26	0.81	0.81	0.85	0.86	0.96	0.90	1.00	0.92	1.07	0.92	1.08	0.91	1.19	0.90
28	0.81	0.83	0.85	0.87	0.96	0.92	1.00	0.94	1.07	0.93	1.08	0.92	1.19	0.91
30	0.81	0.84	0.85	0.89	0.96	0.93	1.00	0.95	1.07	0.95	1.08	0.94	1.19	0.93
32	0.81	0.86	0.85	0.90	0.96	0.95	1.00	0.97	1.07	0.97	1.08	0.95	1.19	0.94
34	0.81	0.87	0.85	0.92	0.96	0.97	1.00	0.99	1.07	0.98	1.08	0.97	1.19	0.96
35	0.81	0.88	0.85	0.93	0.96	0.98	1.00	1.00	1.07	1.00	1.08	0.98	1.19	0.97
36	0.79	0.89	0.86	0.94	0.96	0.99	1.01	0.98	1.06	1.01	1.08	1.00	1.18	0.98
38	0.77	0.91	0.88	0.96	0.98	1.01	1.02	1.00	1.05	1.03	1.07	1.02	1.17	1.00
40	0.74	0.94	0.90	0.98	0.99	1.03	1.04	1.03	1.04	1.05	1.06	1.04	1.16	1.03

Total Power of Combined Indoor Units: 50%

Outdoor Air Inlet Dry Bulb Temperature (ºC)	Indoor Air Inlet Wet Bulb Temperature (ºC)													
	14		16		18		19		20		22		24	
	Max. capacity	Consumed electrical power	Max. capacity	Consumed electrical power	Max. capacity	Consumed electrical power	Max. capacity	Consumed electrical power	Max. capacity	Consumed electrical power	Max. capacity	Consumed electrical power	Max. capacity	Consumed electrical power
10	0.81	0.79	0.85	0.82	0.96	0.84	1.00	0.86	1.07	0.86	1.08	0.86	1.19	0.87
12	0.81	0.80	0.85	0.82	0.96	0.85	1.00	0.86	1.07	0.86	1.08	0.86	1.19	0.87
14	0.81	0.80	0.85	0.83	0.96	0.85	1.00	0.86	1.07	0.86	1.08	0.87	1.19	0.87
16	0.81	0.80	0.85	0.83	0.96	0.85	1.00	0.87	1.07	0.87	1.08	0.87	1.19	0.88
18	0.81	0.81	0.85	0.83	0.96	0.86	1.00	0.87	1.07	0.88	1.08	0.88	1.19	0.89
20	0.81	0.82	0.85	0.84	0.96	0.87	1.00	0.88	1.07	0.88	1.08	0.89	1.19	0.89
22	0.81	0.83	0.85	0.85	0.96	0.88	1.00	0.89	1.07	0.89	1.08	0.90	1.19	0.90
24	0.81	0.84	0.85	0.86	0.96	0.89	1.00	0.90	1.07	0.91	1.08	0.91	1.19	0.92
26	0.81	0.85	0.85	0.88	0.96	0.90	1.00	0.92	1.07	0.92	1.08	0.92	1.19	0.93
28	0.81	0.86	0.85	0.89	0.96	0.92	1.00	0.93	1.07	0.94	1.08	0.94	1.19	0.94
30	0.81	0.88	0.85	0.91	0.96	0.93	1.00	0.95	1.07	0.95	1.08	0.95	1.19	0.96
32	0.81	0.89	0.85	0.92	0.96	0.95	1.00	0.96	1.07	0.97	1.08	0.97	1.19	0.98
34	0.81	0.91	0.85	0.94	0.96	0.97	1.00	0.98	1.07	0.99	1.08	0.99	1.19	1.00
35	0.81	0.93	0.85	0.95	0.96	0.98	1.00	1.00	1.07	1.00	1.08	1.01	1.19	1.01
36	0.79	0.93	0.86	0.96	0.96	0.99	1.01	1.02	1.06	1.01	1.08	1.01	1.18	1.02
38	0.77	0.95	0.88	0.98	0.98	1.01	1.02	1.04	1.05	1.03	1.07	1.04	1.17	1.04
40	0.74	0.98	0.90	1.01	0.99	1.04	1.04	1.07	1.04	1.06	1.06	1.06	1.16	1.07

4.6.2. Heating Correction Factor for Outdoor Units

◆ **Heating correction factor for FSN(E) and FXN(E) units**

Total Power of Combined Indoor Units: 130%

Outdoor Air Inlet Wet Bulb Temperature (ºC))	Indoor Air Inlet Dry Bulb Temperature (ºC)									
	16		18		20		22		24	
	Max. capacity	Consumed electrical power	Max. capacity	Consumed electrical power	Max. capacity	Consumed electrical power	Max. capacity	Consumed electrical power	Max. capacity	Consumed electrical power
-20	0.51	0.92	0.51	0.96	0.51	1.00	0.51	1.06	0.51	1.12
-17	0.54	0.91	0.54	0.95	0.54	0.99	0.54	1.05	0.54	1.10
-15	0.55	0.89	0.56	0.94	0.56	0.98	0.56	1.04	0.56	1.09
-13	0.59	0.87	0.59	0.91	0.59	0.96	0.59	1.01	0.59	1.06
-11	0.62	0.85	0.62	0.89	0.62	0.93	0.62	0.98	0.62	1.03
-9	0.65	0.83	0.65	0.87	0.65	0.91	0.65	0.96	0.65	1.01
-7	0.69	0.80	0.69	0.84	0.69	0.88	0.68	0.93	0.68	0.98
-6	0.71	0.79	0.70	0.83	0.70	0.87	0.70	0.92	0.70	0.96
-5	0.73	0.80	0.73	0.84	0.72	0.88	0.72	0.93	0.72	0.97
-3	0.78	0.82	0.77	0.86	0.77	0.90	0.77	0.95	0.77	1.00
-1	0.82	0.84	0.82	0.88	0.82	0.92	0.82	0.97	0.82	1.02
1	0.87	0.86	0.87	0.90	0.87	0.94	0.87	0.99	0.86	1.04
3	0.92	0.88	0.92	0.92	0.92	0.96	0.92	1.02	0.92	1.07
5	0.98	0.90	0.97	0.94	0.97	0.99	0.97	1.04	0.97	1.09
6	1.00	0.91	1.00	0.96	1.00	1.00	1.00	1.05	1.00	1.11
7	1.03	0.93	1.03	0.97	1.03	1.02	1.03	1.07	1.03	1.13
9	1.09	0.96	1.09	1.01	1.09	1.05	1.09	1.11	1.09	1.17
11	1.16	0.99	1.16	1.04	1.16	1.09	1.16	1.15	1.16	1.21
14	1.23	1.04	1.23	1.08	1.24	1.13	1.24	1.20	1.24	1.25
15	1.28	1.06	1.28	1.11	1.28	1.16	1.28	1.22	1.28	1.29

Total Power of Combined Indoor Units: 120%

Outdoor Air Inlet Wet Bulb Temperature (ºC))	Indoor Air Inlet Dry Bulb Temperature (ºC)									
	16		18		20		22		24	
	Max. capacity	Consumed electrical power	Max. capacity	Consumed electrical power	Max. capacity	Consumed electrical power	Max. capacity	Consumed electrical power	Max. capacity	Consumed electrical power
-20	0.51	0.92	0.51	0.96	0.51	1.00	0.51	1.06	0.51	1.12
-17	0.54	0.91	0.54	0.95	0.54	0.99	0.54	1.05	0.54	1.10
-15	0.55	0.91	0.55	0.95	0.56	0.97	0.56	1.04	0.56	1.11
-13	0.58	0.89	0.58	0.92	0.59	0.95	0.59	1.02	0.59	1.08
-11	0.61	0.87	0.62	0.90	0.62	0.93	0.62	1.00	0.62	1.05
-9	0.65	0.84	0.65	0.88	0.65	0.91	0.65	0.97	0.65	1.03
-7	0.68	0.82	0.68	0.86	0.68	0.88	0.68	0.95	0.68	1.00
-6	0.70	0.81	0.70	0.85	0.70	0.87	0.70	0.94	0.70	0.99
-5	0.72	0.82	0.72	0.86	0.72	0.88	0.72	0.95	0.72	1.00
-3	0.77	0.84	0.77	0.88	0.77	0.91	0.77	0.97	0.77	1.03
-1	0.82	0.87	0.82	0.90	0.82	0.93	0.81	1.00	0.81	1.06
1	0.87	0.89	0.87	0.92	0.86	0.95	0.86	1.02	0.86	1.08
3	0.92	0.91	0.92	0.94	0.92	0.97	0.92	1.04	0.92	1.10
5	0.98	0.92	0.97	0.96	0.97	0.99	0.97	1.06	0.97	1.13
6	1.00	0.93	1.00	0.97	1.00	1.00	1.00	1.07	1.00	1.14
7	1.03	0.96	1.03	1.00	1.03	1.03	1.03	1.10	1.03	1.17
9	1.10	1.00	1.10	1.05	1.10	1.08	1.10	1.16	1.10	1.22
11	1.17	1.05	1.17	1.10	1.17	1.13	1.16	1.21	1.16	1.28
14	1.25	1.11	1.25	1.16	1.25	1.19	1.25	1.28	1.25	1.36
15	1.30	1.15	1.30	1.20	1.30	1.23	1.30	1.32	1.30	1.40

Total Power of Combined Indoor Units: 110%

Outdoor Air Inlet Wet Bulb Temperature (ºC)	Indoor Air Inlet Dry Bulb Temperature (ºC)									
	16		18		20		22		24	
	Max. capacity	Consumed electrical power	Max. capacity	Consumed electrical power	Max. capacity	Consumed electrical power	Max. capacity	Consumed electrical power	Max. capacity	Consumed electrical power
-20	0.51	0.92	0.51	0.96	0.51	1.00	0.51	1.06	0.51	1.12
-17	0.54	0.91	0.54	0.95	0.54	0.99	0.54	1.05	0.54	1.10
-15	0.58	1.07	0.58	1.05	0.59	1.03	0.59	1.09	0.59	1.15
-13	0.62	1.05	0.62	1.03	0.62	1.01	0.62	1.07	0.62	1.13
-11	0.65	1.03	0.65	1.01	0.65	0.99	0.65	1.05	0.66	1.11
-9	0.68	1.01	0.68	0.99	0.68	0.97	0.69	1.03	0.69	1.09
-7	0.72	0.99	0.72	0.97	0.72	0.95	0.72	1.01	0.72	1.07
-6	0.74	0.98	0.74	0.96	0.73	0.95	0.74	1.00	0.74	1.06
-5	0.76	1.00	0.76	0.98	0.76	0.96	0.76	1.02	0.76	1.07
-3	0.81	1.03	0.81	1.01	0.81	0.99	0.80	1.05	0.79	1.10
-1	0.87	1.05	0.86	1.03	0.86	1.02	0.84	1.08	0.83	1.13
1	0.92	1.08	0.92	1.06	0.91	1.05	0.89	1.11	0.86	1.17
3	0.98	1.07	0.96	1.05	0.95	1.03	0.93	1.09	0.92	1.15
5	1.03	1.05	1.01	1.03	0.98	1.01	0.98	1.07	0.97	1.13
6	1.06	1.04	1.03	1.02	1.00	1.00	1.00	1.06	1.00	1.12
7	1.08	1.06	1.06	1.04	1.03	1.02	1.03	1.08	1.03	1.15
9	1.12	1.11	1.11	1.09	1.10	1.07	1.10	1.14	1.10	1.20
11	1.16	1.17	1.16	1.14	1.17	1.12	1.17	1.19	1.16	1.25
14	1.25	1.23	1.25	1.20	1.25	1.18	1.25	1.25	1.25	1.32
15	1.30	1.26	1.30	1.24	1.30	1.22	1.30	1.29	1.30	1.36

Total Power of Combined Indoor Units: 100%

Outdoor Air Inlet Wet Bulb Temperature (ºC)	Indoor Air Inlet Dry Bulb Temperature (ºC)									
	16		18		20		22		24	
	Max. capacity	Consumed electrical power	Max. capacity	Consumed electrical power	Max. capacity	Consumed electrical power	Max. capacity	Consumed electrical power	Max. capacity	Consumed electrical power
-20	0.51	0.92	0.51	0.96	0.51	1.00	0.51	1.06	0.51	1.12
-17	0.54	0.91	0.54	0.95	0.54	0.99	0.54	1.05	0.54	1.10
-15	0.62	1.26	0.62	1.18	0.62	1.09	0.62	1.15	0.62	1.20
-13	0.65	1.24	0.65	1.16	0.65	1.08	0.66	1.13	0.66	1.18
-11	0.69	1.22	0.69	1.14	0.69	1.06	0.69	1.11	0.70	1.17
-9	0.72	1.20	0.72	1.13	0.72	1.05	0.73	1.10	0.73	1.15
-7	0.76	1.19	0.76	1.11	0.76	1.03	0.76	1.08	0.77	1.13
-6	0.78	1.18	0.78	1.10	0.78	1.02	0.78	1.07	0.79	1.12
-5	0.80	1.20	0.80	1.12	0.80	1.04	0.80	1.09	0.80	1.14
-3	0.86	1.24	0.86	1.16	0.86	1.07	0.84	1.13	0.82	1.18
-1	0.92	1.27	0.91	1.19	0.91	1.11	0.88	1.16	0.84	1.22
1	0.97	1.32	0.97	1.23	0.97	1.14	0.91	1.20	0.86	1.25
3	1.04	1.25	1.01	1.17	0.98	1.09	0.95	1.14	0.91	1.19
5	1.10	1.18	1.05	1.11	0.99	1.03	0.98	1.08	0.97	1.13
6	1.13	1.15	1.07	1.08	1.00	1.00	1.00	1.05	1.00	1.10
7	1.14	1.18	1.09	1.10	1.03	1.02	1.03	1.07	1.03	1.12
9	1.15	1.23	1.12	1.15	1.10	1.07	1.10	1.12	1.10	1.17
11	1.16	1.28	1.16	1.20	1.17	1.11	1.17	1.16	1.17	1.22
14	1.25	1.34	1.25	1.26	1.25	1.17	1.25	1.23	1.25	1.28
15	1.31	1.38	1.31	1.30	1.30	1.20	1.30	1.26	1.30	1.32

Total Power of Combined Indoor Units: 90%

Outdoor Air Inlet Wet Bulb Temperature (ºC))	Indoor Air Inlet Dry Bulb Temperature (ºC)									
	16		18		20		22		24	
	Max. capacity	Consumed electrical power	Max. capacity	Consumed electrical power	Max. capacity	Consumed electrical power	Max. capacity	Consumed electrical power	Max. capacity	Consumed electrical power
-20	0.51	0.92	0.51	0.96	0.51	1.00	0.51	1.06	0.51	1.12
-17	0.54	0.91	0.54	0.95	0.54	0.99	0.54	1.05	0.54	1.10
-15	0.67	1.37	0.68	1.31	0.68	1.26	0.68	1.32	0.69	1.39
-13	0.71	1.36	0.71	1.30	0.71	1.25	0.71	1.31	0.71	1.37
-11	0.75	1.35	0.75	1.29	0.75	1.23	0.74	1.30	0.73	1.36
-9	0.79	1.33	0.79	1.28	0.79	1.22	0.77	1.29	0.76	1.35
-7	0.83	1.32	0.83	1.27	0.83	1.21	0.80	1.27	0.78	1.33
-6	0.85	1.32	0.85	1.26	0.85	1.21	0.82	1.27	0.79	1.33
-5	0.88	1.30	0.87	1.24	0.86	1.19	0.83	1.25	0.79	1.31
-3	0.92	1.27	0.91	1.21	0.89	1.16	0.85	1.22	0.81	1.28
-1	0.97	1.24	0.94	1.19	0.92	1.13	0.87	1.19	0.82	1.25
1	1.01	1.20	0.98	1.15	0.95	1.10	0.91	1.16	0.86	1.21
3	1.05	1.15	1.01	1.10	0.97	1.05	0.94	1.11	0.92	1.16
5	1.08	1.10	1.03	1.05	0.98	1.01	0.98	1.06	0.97	1.11
6	1.10	1.09	1.05	1.04	1.00	1.00	1.00	1.05	1.00	1.10
7	1.11	1.12	1.07	1.07	1.03	1.02	1.03	1.08	1.03	1.13
9	1.12	1.17	1.11	1.12	1.10	1.07	1.10	1.13	1.10	1.18
11	1.16	1.22	1.17	1.17	1.17	1.12	1.17	1.18	1.17	1.23
14	1.26	1.29	1.26	1.23	1.26	1.18	1.25	1.24	1.25	1.30
15	1.31	1.33	1.31	1.27	1.31	1.22	1.31	1.28	1.30	1.34

Total Power of Combined Indoor Units: 80%

Outdoor Air Inlet Wet Bulb Temperature (ºC))	Indoor Air Inlet Dry Bulb Temperature (ºC)									
	16		18		20		22		24	
	Max. capacity	Consumed electrical power	Max. capacity	Consumed electrical power	Max. capacity	Consumed electrical power	Max. capacity	Consumed electrical power	Max. capacity	Consumed electrical power
-20	0.51	0.92	0.51	0.96	0.51	1.00	0.51	1.06	0.51	1.12
-17	0.54	0.91	0.54	0.95	0.54	0.99	0.54	1.05	0.54	1.10
-15	0.71	1.37	0.72	1.39	0.72	1.41	0.73	1.49	0.74	1.56
-13	0.76	1.37	0.76	1.39	0.76	1.41	0.75	1.48	0.75	1.56
-11	0.80	1.36	0.80	1.38	0.80	1.40	0.77	1.48	0.75	1.55
-9	0.84	1.36	0.84	1.37	0.84	1.39	0.79	1.47	0.75	1.54
-7	0.89	1.35	0.88	1.37	0.87	1.39	0.81	1.46	0.76	1.54
-6	0.91	1.35	0.90	1.37	0.89	1.38	0.83	1.46	0.76	1.53
-5	0.93	1.30	0.91	1.32	0.89	1.34	0.83	1.41	0.76	1.48
-3	0.96	1.20	0.93	1.22	0.90	1.23	0.83	1.30	0.77	1.36
-1	0.99	1.10	0.95	1.11	0.90	1.13	0.84	1.19	0.77	1.25
1	1.03	1.00	0.97	1.01	0.90	1.03	0.87	1.09	0.83	1.14
3	1.03	0.96	0.97	0.98	0.92	0.99	0.90	1.05	0.88	1.10
5	1.03	0.93	0.98	0.94	0.94	0.96	0.94	1.01	0.94	1.06
6	1.04	0.97	1.02	0.98	1.00	1.00	1.00	1.05	1.00	1.11
7	1.04	0.97	1.02	0.98	1.00	1.00	1.00	1.05	1.00	1.11
9	1.06	1.02	1.06	1.04	1.07	1.05	1.07	1.11	1.07	1.16
11	1.12	1.07	1.13	1.09	1.13	1.10	1.13	1.16	1.13	1.22
14	1.22	1.13	1.22	1.15	1.22	1.16	1.22	1.23	1.21	1.29
15	1.27	1.17	1.27	1.18	1.27	1.20	1.27	1.27	1.26	1.33

Total Power of Combined Indoor Units: 70%

Outdoor Air Inlet Wet Bulb Temperature (ºC))	Indoor Air Inlet Dry Bulb Temperature (ºC)									
	16		18		20		22		24	
	Max. capacity	Consumed electrical power	Max. capacity	Consumed electrical power	Max. capacity	Consumed electrical power	Max. capacity	Consumed electrical power	Max. capacity	Consumed electrical power
-20	0.51	0.92	0.51	0.96	0.51	1.00	0.51	1.06	0.51	1.12
-17	0.54	0.91	0.54	0.95	0.54	0.99	0.54	1.05	0.54	1.10
-15	0.86	1.60	0.83	1.61	0.81	1.61	0.78	1.70	0.76	1.78
-13	0.89	1.54	0.86	1.54	0.83	1.55	0.79	1.63	0.76	1.71
-11	0.91	1.47	0.88	1.48	0.85	1.48	0.81	1.56	0.76	1.64
-9	0.93	1.41	0.90	1.41	0.87	1.42	0.82	1.49	0.76	1.57
-7	0.96	1.35	0.93	1.35	0.90	1.35	0.83	1.42	0.76	1.50
-6	0.97	1.31	0.94	1.32	0.91	1.32	0.84	1.39	0.77	1.46
-5	0.98	1.27	0.94	1.27	0.91	1.28	0.84	1.34	0.77	1.41
-3	1.00	1.18	0.96	1.18	0.91	1.19	0.85	1.25	0.79	1.31
-1	1.02	1.09	0.97	1.09	0.91	1.10	0.86	1.16	0.81	1.22
1	1.04	1.01	0.98	1.01	0.91	1.01	0.89	1.07	0.86	1.12
3	1.05	0.99	0.99	0.99	0.94	1.00	0.93	1.05	0.92	1.10
5	1.05	0.98	1.01	0.98	0.97	0.99	0.97	1.04	0.97	1.09
6	1.05	0.99	1.03	1.00	1.00	1.00	1.00	1.05	1.00	1.10
7	1.07	1.02	1.05	1.02	1.04	1.03	1.04	1.08	1.04	1.14
9	1.11	1.08	1.11	1.08	1.11	1.08	1.11	1.14	1.11	1.20
11	1.17	1.13	1.17	1.13	1.18	1.14	1.18	1.20	1.17	1.26
14	1.26	1.20	1.26	1.20	1.27	1.21	1.26	1.27	1.26	1.34
15	1.31	1.24	1.31	1.25	1.32	1.25	1.32	1.31	1.31	1.38

Total Power of Combined Indoor Units: 60%

Outdoor Air Inlet Wet Bulb Temperature (ºC))	Indoor Air Inlet Dry Bulb Temperature (ºC)									
	16		18		20		22		24	
	Max. capacity	Consumed electrical power	Max. capacity	Consumed electrical power	Max. capacity	Consumed electrical power	Max. capacity	Consumed electrical power	Max. capacity	Consumed electrical power
-20	0.51	0.92	0.51	0.96	0.51	1.00	0.51	1.06	0.51	1.12
-17	0.54	0.91	0.54	0.95	0.54	0.99	0.54	1.05	0.54	1.10
-15	1.01	1.75	0.95	1.79	0.88	1.82	0.81	1.91	0.74	2.01
-13	1.01	1.62	0.95	1.65	0.88	1.68	0.81	1.77	0.74	1.85
-11	1.01	1.48	0.95	1.52	0.88	1.54	0.81	1.62	0.74	1.70
-9	1.01	1.35	0.95	1.38	0.88	1.40	0.81	1.48	0.74	1.55
-7	1.01	1.22	0.95	1.24	0.88	1.26	0.81	1.33	0.74	1.40
-6	1.01	1.15	0.95	1.17	0.88	1.19	0.81	1.26	0.74	1.32
-5	1.01	1.12	0.95	1.14	0.88	1.16	0.82	1.22	0.76	1.28
-3	1.01	1.05	0.95	1.07	0.88	1.09	0.84	1.15	0.79	1.21
-1	1.01	0.99	0.95	1.01	0.88	1.02	0.85	1.08	0.83	1.13
1	1.02	0.92	0.95	0.94	0.88	0.95	0.87	1.01	0.86	1.06
3	1.02	0.94	0.98	0.96	0.93	0.97	0.92	1.02	0.92	1.08
5	1.03	0.96	1.00	0.97	0.98	0.99	0.97	1.04	0.97	1.10
6	1.03	0.96	1.02	0.98	1.00	1.00	1.00	1.05	1.00	1.10
7	1.06	0.99	1.05	1.01	1.04	1.03	1.04	1.08	1.04	1.14
9	1.12	1.05	1.11	1.07	1.11	1.09	1.11	1.15	1.11	1.20
11	1.18	1.11	1.18	1.13	1.18	1.15	1.18	1.21	1.18	1.27
14	1.25	1.18	1.26	1.20	1.27	1.22	1.27	1.29	1.27	1.35
15	1.30	1.23	1.31	1.25	1.32	1.27	1.32	1.34	1.32	1.40

Total Power of Combined Indoor Units: 50%

Outdoor Air Inlet Wet Bulb Temperature (ºC))	Indoor Air Inlet Dry Bulb Temperature (ºC)									
	16		18		20		22		24	
	Max. capacity	Consumed electrical power	Max. capacity	Consumed electrical power	Max. capacity	Consumed electrical power	Max. capacity	Consumed electrical power	Max. capacity	Consumed electrical power
-20	0.51	0.92	0.51	0.96	0.51	1.00	0.51	1.06	0.51	1.12
-17	0.54	0.91	0.54	0.95	0.54	0.99	0.54	1.05	0.54	1.10
-15	1.02	1.80	0.96	1.81	0.89	1.83	0.82	1.91	0.74	1.99
-13	1.02	1.66	0.96	1.67	0.89	1.68	0.82	1.76	0.75	1.83
-11	1.03	1.52	0.96	1.53	0.89	1.54	0.82	1.61	0.75	1.68
-9	1.03	1.38	0.96	1.39	0.89	1.40	0.82	1.46	0.75	1.52
-7	1.03	1.24	0.96	1.25	0.89	1.25	0.82	1.31	0.75	1.36
-6	1.03	1.16	0.96	1.17	0.89	1.18	0.82	1.23	0.75	1.28
-5	1.03	1.14	0.96	1.14	0.89	1.15	0.82	1.21	0.75	1.26
-3	1.03	1.08	0.96	1.09	0.90	1.09	0.82	1.15	0.75	1.19
-1	1.02	1.02	0.96	1.03	0.90	1.04	0.85	1.08	0.80	1.13
1	1.02	0.97	0.96	0.98	0.90	0.98	0.88	1.03	0.86	1.07
3	1.03	0.93	0.97	0.94	0.92	0.94	0.91	0.98	0.91	1.03
5	1.04	0.96	1.00	0.97	0.95	0.98	0.96	1.02	0.97	1.06
6	1.05	0.98	1.02	0.99	1.00	1.00	1.00	1.04	0.99	1.09
7	1.05	1.01	1.04	1.02	1.03	1.02	1.03	1.07	1.03	1.11
9	1.05	1.06	1.07	1.06	1.10	1.07	1.10	1.12	1.10	1.17
11	1.12	1.10	1.14	1.11	1.16	1.12	1.16	1.17	1.16	1.22
14	1.19	1.16	1.21	1.17	1.24	1.17	1.24	1.23	1.25	1.28
15	1.23	1.19	1.26	1.21	1.29	1.21	1.29	1.26	1.30	1.32

4

◆ Heating Capacity Factor for FSVN(E) units

Total Power of Combined Indoor Units: 130%

Outdoor Air Inlet Wet Bulb Temperature (ºC))	Indoor Air Inlet Dry Bulb Temperature (ºC)									
	16		18		20		22		24	
	Max. capacity	Consumed electrical power	Max. capacity	Consumed electrical power	Max. capacity	Consumed electrical power	Max. capacity	Consumed electrical power	Max. capacity	Consumed electrical power
-20	0.55	0.92	0.53	0.96	0.52	1.00	0.51	1.06	0.51	1.12
-17	0.62	0.91	0.61	0.95	0.59	0.99	0.58	1.05	0.58	1.10
-15	0.66	0.89	0.65	0.94	0.64	0.98	0.63	1.04	0.63	1.09
-13	0.71	0.87	0.70	0.91	0.69	0.96	0.68	1.01	0.67	1.06
-11	0.75	0.85	0.75	0.89	0.73	0.93	0.73	0.98	0.72	1.03
-9	0.80	0.83	0.79	0.87	0.78	0.91	0.77	0.96	0.76	1.01
-7	0.84	0.80	0.83	0.84	0.82	0.88	0.81	0.93	0.79	0.98
-6	0.87	0.79	0.85	0.83	0.84	0.87	0.83	0.92	0.81	0.96
-5	0.89	0.80	0.88	0.84	0.86	0.88	0.84	0.93	0.83	0.97
-3	0.92	0.82	0.91	0.86	0.89	0.90	0.87	0.95	0.84	1.00
-1	0.95	0.84	0.95	0.88	0.92	0.92	0.89	0.97	0.85	1.02
1	0.99	0.86	0.98	0.90	0.95	0.94	0.91	0.99	0.86	1.04
3	1.02	0.88	1.00	0.92	0.97	0.96	0.93	1.02	0.87	1.07
5	1.05	0.90	1.03	0.94	0.99	0.99	0.94	1.04	0.88	1.09
6	1.06	0.91	1.04	0.96	1.00	1.00	0.94	1.05	0.88	1.11
7	1.08	0.93	1.05	0.97	1.01	1.02	0.94	1.07	0.88	1.13
9	1.11	0.96	1.07	1.01	1.02	1.05	0.94	1.11	0.88	1.17
11	1.13	0.99	1.08	1.04	1.02	1.09	0.94	1.15	0.88	1.21
14	1.15	1.04	1.10	1.08	1.02	1.13	0.94	1.20	0.88	1.25
15	1.16	1.06	1.11	1.11	1.02	1.16	0.94	1.22	0.88	1.29

Total Power of Combined Indoor Units: 120%

Outdoor Air Inlet Wet Bulb Temperature (ºC))	Indoor Air Inlet Dry Bulb Temperature (ºC)									
	16		18		20		22		24	
	Max. capacity	Consumed electrical power	Max. capacity	Consumed electrical power	Max. capacity	Consumed electrical power	Max. capacity	Consumed electrical power	Max. capacity	Consumed electrical power
-20	0.55	0.92	0.53	0.96	0.52	1.00	0.51	1.06	0.51	1.12
-17	0.62	0.91	0.61	0.95	0.59	0.99	0.58	1.05	0.58	1.10
-15	0.66	0.91	0.65	0.95	0.64	0.97	0.63	1.04	0.63	1.11
-13	0.71	0.89	0.70	0.92	0.69	0.95	0.68	1.02	0.67	1.08
-11	0.75	0.87	0.75	0.90	0.73	0.93	0.73	1.00	0.72	1.05
-9	0.80	0.84	0.79	0.88	0.78	0.91	0.77	0.97	0.76	1.03
-7	0.84	0.82	0.83	0.86	0.82	0.88	0.81	0.95	0.79	1.00
-6	0.87	0.81	0.85	0.85	0.84	0.87	0.83	0.94	0.81	0.99
-5	0.89	0.82	0.88	0.86	0.86	0.88	0.84	0.95	0.83	1.00
-3	0.92	0.84	0.91	0.88	0.89	0.91	0.87	0.97	0.84	1.03
-1	0.95	0.87	0.95	0.90	0.92	0.93	0.89	1.00	0.85	1.06
1	0.99	0.89	0.98	0.92	0.95	0.95	0.91	1.02	0.86	1.08
3	1.02	0.91	1.00	0.94	0.97	0.97	0.93	1.04	0.87	1.10
5	1.05	0.92	1.03	0.96	0.99	0.99	0.94	1.06	0.88	1.13
6	1.06	0.93	1.04	0.97	1.00	1.00	0.94	1.07	0.88	1.14
7	1.08	0.96	1.05	1.00	1.01	1.03	0.94	1.10	0.88	1.17
9	1.11	1.00	1.07	1.05	1.02	1.08	0.94	1.16	0.88	1.22
11	1.13	1.05	1.08	1.10	1.02	1.13	0.94	1.21	0.88	1.28
14	1.15	1.11	1.10	1.16	1.02	1.19	0.94	1.28	0.88	1.36
15	1.16	1.15	1.11	1.20	1.02	1.23	0.94	1.32	0.88	1.40

Total Power of Combined Indoor Units: 110%

Outdoor Air Inlet Wet Bulb Temperature (ºC))	Indoor Air Inlet Dry Bulb Temperature (ºC)									
	16		18		20		22		24	
	Max. capacity	Consumed electrical power	Max. capacity	Consumed electrical power	Max. capacity	Consumed electrical power	Max. capacity	Consumed electrical power	Max. capacity	Consumed electrical power
-20	0.55	0.92	0.53	0.96	0.52	1.00	0.51	1.06	0.51	1.12
-17	0.62	0.91	0.61	0.95	0.59	0.99	0.58	1.05	0.58	1.10
-15	0.66	1.07	0.65	1.05	0.64	1.03	0.63	1.09	0.63	1.15
-13	0.71	1.05	0.70	1.03	0.69	1.01	0.68	1.07	0.67	1.13
-11	0.75	1.03	0.75	1.01	0.73	0.99	0.73	1.05	0.72	1.11
-9	0.80	1.01	0.79	0.99	0.78	0.97	0.77	1.03	0.76	1.09
-7	0.84	0.99	0.83	0.97	0.82	0.95	0.81	1.01	0.79	1.07
-6	0.87	0.98	0.85	0.96	0.84	0.95	0.83	1.00	0.81	1.06
-5	0.89	1.00	0.88	0.98	0.86	0.96	0.84	1.02	0.83	1.07
-3	0.92	1.03	0.91	1.01	0.89	0.99	0.87	1.05	0.84	1.10
-1	0.95	1.05	0.95	1.03	0.92	1.02	0.89	1.08	0.85	1.13
1	0.99	1.08	0.98	1.06	0.95	1.05	0.91	1.11	0.86	1.17
3	1.02	1.07	1.00	1.05	0.97	1.03	0.93	1.09	0.87	1.15
5	1.05	1.05	1.03	1.03	0.99	1.01	0.94	1.07	0.88	1.13
6	1.06	1.04	1.04	1.02	1.00	1.00	0.94	1.06	0.88	1.12
7	1.08	1.06	1.05	1.04	1.01	1.02	0.94	1.08	0.88	1.15
9	1.11	1.11	1.07	1.09	1.02	1.07	0.94	1.14	0.88	1.20
11	1.13	1.17	1.08	1.14	1.02	1.12	0.94	1.19	0.88	1.25
14	1.15	1.23	1.10	1.20	1.02	1.18	0.94	1.25	0.88	1.32
15	1.16	1.26	1.11	1.24	1.02	1.22	0.94	1.29	0.88	1.36

Total Power of Combined Indoor Units: 100%

Outdoor Air Inlet Wet Bulb Temperature (ºC))	Indoor Air Inlet Dry Bulb Temperature (ºC)									
	16		18		20		22		24	
	Max. capacity	Consumed electrical power	Max. capacity	Consumed electrical power	Max. capacity	Consumed electrical power	Max. capacity	Consumed electrical power	Max. capacity	Consumed electrical power
-20	0.55	0.92	0.53	0.96	0.52	1.00	0.51	1.06	0.51	1.12
-17	0.62	0.91	0.61	0.95	0.59	0.99	0.58	1.05	0.58	1.10
-15	0.66	1.26	0.65	1.18	0.64	1.09	0.63	1.15	0.63	1.20
-13	0.71	1.24	0.70	1.16	0.69	1.08	0.68	1.13	0.67	1.18
-11	0.75	1.22	0.75	1.14	0.73	1.06	0.73	1.11	0.72	1.17
-9	0.80	1.20	0.79	1.13	0.78	1.05	0.77	1.10	0.76	1.15
-7	0.84	1.19	0.83	1.11	0.82	1.03	0.81	1.08	0.79	1.13
-6	0.87	1.18	0.85	1.10	0.84	1.02	0.83	1.07	0.81	1.12
-5	0.89	1.20	0.88	1.12	0.86	1.04	0.84	1.09	0.83	1.14
-3	0.92	1.24	0.91	1.16	0.89	1.07	0.87	1.13	0.84	1.18
-1	0.95	1.27	0.95	1.19	0.92	1.11	0.89	1.16	0.85	1.22
1	0.99	1.32	0.98	1.23	0.95	1.14	0.91	1.20	0.86	1.25
3	1.02	1.25	1.00	1.17	0.97	1.09	0.93	1.14	0.87	1.19
5	1.05	1.18	1.03	1.11	0.99	1.03	0.94	1.08	0.88	1.13
6	1.06	1.15	1.04	1.08	1.00	1.00	0.94	1.05	0.88	1.10
7	1.08	1.18	1.05	1.10	1.01	1.02	0.94	1.07	0.88	1.12
9	1.11	1.23	1.07	1.15	1.02	1.07	0.94	1.12	0.88	1.17
11	1.13	1.28	1.08	1.20	1.02	1.11	0.94	1.16	0.88	1.22
14	1.15	1.34	1.10	1.26	1.02	1.17	0.94	1.23	0.88	1.28
15	1.16	1.38	1.11	1.30	1.02	1.20	0.94	1.26	0.88	1.32

Total Power of Combined Indoor Units: 90%

Outdoor Air Inlet Wet Bulb Temperature (ºC))	Indoor Air Inlet Dry Bulb Temperature (ºC)									
	16		18		20		22		24	
	Max. capacity	Consumed electrical power	Max. capacity	Consumed electrical power	Max. capacity	Consumed electrical power	Max. capacity	Consumed electrical power	Max. capacity	Consumed electrical power
-20	0.55	0.92	0.53	0.96	0.52	1.00	0.51	1.06	0.51	1.12
-17	0.62	0.91	0.61	0.95	0.59	0.99	0.58	1.05	0.58	1.10
-15	0.66	1.37	0.65	1.31	0.64	1.26	0.63	1.32	0.63	1.39
-13	0.71	1.36	0.70	1.30	0.69	1.25	0.68	1.31	0.67	1.37
-11	0.75	1.35	0.75	1.29	0.73	1.23	0.73	1.30	0.72	1.36
-9	0.80	1.33	0.79	1.28	0.78	1.22	0.77	1.29	0.76	1.35
-7	0.84	1.32	0.83	1.27	0.82	1.21	0.81	1.27	0.79	1.33
-6	0.87	1.32	0.85	1.26	0.84	1.21	0.83	1.27	0.81	1.33
-5	0.89	1.30	0.88	1.24	0.86	1.19	0.84	1.25	0.83	1.31
-3	0.92	1.27	0.91	1.21	0.89	1.16	0.87	1.22	0.84	1.28
-1	0.95	1.24	0.95	1.19	0.92	1.13	0.89	1.19	0.85	1.25
1	0.99	1.20	0.98	1.15	0.95	1.10	0.91	1.16	0.86	1.21
3	1.02	1.15	1.00	1.10	0.97	1.05	0.93	1.11	0.87	1.16
5	1.05	1.10	1.03	1.05	0.99	1.01	0.94	1.06	0.88	1.11
6	1.06	1.09	1.04	1.04	1.00	1.00	0.94	1.05	0.88	1.10
7	1.08	1.12	1.05	1.07	1.01	1.02	0.94	1.08	0.88	1.13
9	1.11	1.17	1.07	1.12	1.02	1.07	0.94	1.13	0.88	1.18
11	1.13	1.22	1.08	1.17	1.02	1.12	0.94	1.18	0.88	1.23
14	1.15	1.29	1.10	1.23	1.02	1.18	0.94	1.24	0.88	1.30
15	1.16	1.33	1.11	1.27	1.02	1.22	0.94	1.28	0.88	1.34

Total Power of Combined Indoor Units: 80%

Outdoor Air Inlet Wet Bulb Temperature (ºC))	Indoor Air Inlet Dry Bulb Temperature (ºC)									
	16		18		20		22		24	
	Max. capacity	Consumed electrical power	Max. capacity	Consumed electrical power	Max. capacity	Consumed electrical power	Max. capacity	Consumed electrical power	Max. capacity	Consumed electrical power
-20	0.55	0.92	0.53	0.96	0.52	1.00	0.51	1.06	0.51	1.12
-17	0.62	0.91	0.61	0.95	0.59	0.99	0.58	1.05	0.58	1.10
-15	0.66	1.37	0.65	1.39	0.64	1.41	0.63	1.49	0.63	1.56
-13	0.71	1.37	0.70	1.39	0.69	1.41	0.68	1.48	0.67	1.56
-11	0.75	1.36	0.75	1.38	0.73	1.40	0.73	1.48	0.72	1.55
-9	0.80	1.36	0.79	1.37	0.78	1.39	0.77	1.47	0.76	1.54
-7	0.84	1.35	0.83	1.37	0.82	1.39	0.81	1.46	0.79	1.54
-6	0.87	1.35	0.85	1.37	0.84	1.38	0.83	1.46	0.81	1.53
-5	0.89	1.30	0.88	1.32	0.86	1.34	0.84	1.41	0.83	1.48
-3	0.92	1.20	0.91	1.22	0.89	1.23	0.87	1.30	0.84	1.36
-1	0.95	1.10	0.95	1.11	0.92	1.13	0.89	1.19	0.85	1.25
1	0.99	1.00	0.98	1.01	0.95	1.03	0.91	1.09	0.86	1.14
3	1.02	0.96	1.00	0.98	0.97	0.99	0.93	1.05	0.87	1.10
5	1.05	0.93	1.03	0.94	0.99	0.96	0.94	1.01	0.88	1.06
6	1.06	0.97	1.04	0.98	1.00	1.00	0.94	1.05	0.88	1.11
7	1.08	0.97	1.05	0.98	1.01	1.00	0.94	1.05	0.88	1.11
9	1.11	1.02	1.07	1.04	1.02	1.05	0.94	1.11	0.88	1.16
11	1.13	1.07	1.08	1.09	1.02	1.10	0.94	1.16	0.88	1.22
14	1.15	1.13	1.10	1.15	1.02	1.16	0.94	1.23	0.88	1.29
15	1.16	1.17	1.11	1.18	1.02	1.20	0.94	1.27	0.88	1.33

Total Power of Combined Indoor Units: 70%

Outdoor Air Inlet Wet Bulb Temperature (ºC))	Indoor Air Inlet Dry Bulb Temperature (ºC)									
	16		18		20		22		24	
	Max. capacity	Consumed electrical power	Max. capacity	Consumed electrical power	Max. capacity	Consumed electrical power	Max. capacity	Consumed electrical power	Max. capacity	Consumed electrical power
-20	0.55	0.92	0.53	0.96	0.52	1.00	0.51	1.06	0.51	1.12
-17	0.74	1.08	0.61	0.95	0.59	0.99	0.58	1.05	0.58	1.10
-15	0.80	2.07	0.65	1.79	0.64	1.82	0.63	1.91	0.63	2.01
-13	0.85	1.91	0.70	1.65	0.69	1.68	0.68	1.77	0.67	1.85
-11	0.90	1.76	0.75	1.52	0.73	1.54	0.73	1.62	0.72	1.70
-9	0.96	1.60	0.79	1.38	0.78	1.40	0.77	1.48	0.76	1.55
-7	1.01	1.44	0.83	1.24	0.82	1.26	0.81	1.33	0.79	1.40
-6	1.04	1.36	0.85	1.17	0.84	1.19	0.83	1.26	0.81	1.32
-5	1.07	1.33	0.88	1.14	0.86	1.16	0.84	1.22	0.83	1.28
-3	1.10	1.25	0.91	1.07	0.89	1.09	0.87	1.15	0.84	1.21
-1	1.14	1.17	0.95	1.01	0.92	1.02	0.89	1.08	0.85	1.13
1	1.18	1.09	0.98	0.94	0.95	0.95	0.91	1.01	0.86	1.06
3	1.22	1.11	1.00	0.96	0.97	0.97	0.93	1.02	0.87	1.08
5	1.26	1.13	1.03	0.97	0.99	0.99	0.94	1.04	0.88	1.10
6	1.28	1.14	1.04	0.98	1.00	1.00	0.94	1.05	0.88	1.10
7	1.29	1.17	1.05	1.01	1.01	1.03	0.94	1.08	0.88	1.14
9	1.33	1.24	1.07	1.07	1.02	1.09	0.94	1.15	0.88	1.20
11	1.35	1.31	1.08	1.13	1.02	1.15	0.94	1.21	0.88	1.27
14	1.38	1.40	1.10	1.20	1.02	1.22	0.94	1.29	0.88	1.35
15	1.40	1.45	1.11	1.25	1.02	1.27	0.94	1.34	0.88	1.40

Total Power of Combined Indoor Units: 60%

Outdoor Air Inlet Wet Bulb Temperature (ºC))	Indoor Air Inlet Dry Bulb Temperature (ºC)									
	16		18		20		22		24	
	Max. capacity	Consumed electrical power	Max. capacity	Consumed electrical power	Max. capacity	Consumed electrical power	Max. capacity	Consumed electrical power	Max. capacity	Consumed electrical power
-20	0.55	0.92	0.53	0.96	0.52	1.00	0.51	1.06	0.51	1.12
-17	0.62	0.91	0.61	0.95	0.59	0.99	0.58	1.05	0.58	1.10
-15	0.66	1.60	0.65	1.61	0.64	1.61	0.63	1.70	0.63	1.78
-13	0.71	1.54	0.70	1.54	0.69	1.55	0.68	1.63	0.67	1.71
-11	0.75	1.47	0.75	1.48	0.73	1.48	0.73	1.56	0.72	1.64
-9	0.80	1.41	0.79	1.41	0.78	1.42	0.77	1.49	0.76	1.57
-7	0.84	1.35	0.83	1.35	0.82	1.35	0.81	1.42	0.79	1.50
-6	0.87	1.31	0.85	1.32	0.84	1.32	0.83	1.39	0.81	1.46
-5	0.89	1.27	0.88	1.27	0.86	1.28	0.84	1.34	0.83	1.41
-3	0.92	1.18	0.91	1.18	0.89	1.19	0.87	1.25	0.84	1.31
-1	0.95	1.09	0.95	1.09	0.92	1.10	0.89	1.16	0.85	1.22
1	0.99	1.01	0.98	1.01	0.95	1.01	0.91	1.07	0.86	1.12
3	1.02	0.99	1.00	0.99	0.97	1.00	0.93	1.05	0.87	1.10
5	1.05	0.98	1.03	0.98	0.99	0.99	0.94	1.04	0.88	1.09
6	1.06	0.99	1.04	1.00	1.00	1.00	0.94	1.05	0.88	1.10
7	1.08	1.02	1.05	1.02	1.01	1.03	0.94	1.08	0.88	1.14
9	1.11	1.08	1.07	1.08	1.02	1.08	0.94	1.14	0.88	1.20
11	1.13	1.13	1.08	1.13	1.02	1.14	0.94	1.20	0.88	1.26
14	1.15	1.20	1.10	1.20	1.02	1.21	0.94	1.27	0.88	1.34
15	1.16	1.24	1.11	1.25	1.02	1.25	0.94	1.31	0.88	1.38

Total Power of Combined Indoor Units: 50%

Outdoor Air Inlet Wet Bulb Temperature (ºC))	Indoor Air Inlet Dry Bulb Temperature (ºC)									
	16		18		20		22		24	
	Max. capacity	Consumed electrical power	Max. capacity	Consumed electrical power	Max. capacity	Consumed electrical power	Max. capacity	Consumed electrical power	Max. capacity	Consumed electrical power
-20	0.55	0.92	0.53	0.96	0.52	1.00	0.51	1.06	0.51	1.12
-17	0.62	0.91	0.61	0.95	0.59	0.99	0.58	1.05	0.58	1.10
-15	0.66	1.80	0.65	1.82	0.64	1.83	0.63	1.91	0.63	2.00
-13	0.71	1.66	0.70	1.68	0.69	1.68	0.68	1.76	0.67	1.84
-11	0.75	1.52	0.75	1.53	0.73	1.54	0.73	1.61	0.72	1.68
-9	0.80	1.38	0.79	1.39	0.78	1.40	0.77	1.46	0.76	1.52
-7	0.84	1.24	0.83	1.25	0.82	1.25	0.81	1.31	0.79	1.36
-6	0.87	1.16	0.85	1.17	0.84	1.18	0.83	1.24	0.81	1.29
-5	0.89	1.14	0.88	1.15	0.86	1.15	0.84	1.21	0.83	1.26
-3	0.92	1.08	0.91	1.09	0.89	1.09	0.87	1.15	0.84	1.20
-1	0.95	1.03	0.95	1.03	0.92	1.04	0.89	1.09	0.85	1.13
1	0.99	0.97	0.98	0.98	0.95	0.98	0.91	1.03	0.86	1.07
3	1.02	0.93	1.00	0.94	0.97	0.94	0.93	0.98	0.87	1.03
5	1.05	0.97	1.03	0.97	0.99	0.98	0.94	1.02	0.88	1.06
6	1.06	0.98	1.04	0.99	1.00	1.00	0.94	1.04	0.88	1.09
7	1.08	1.01	1.05	1.02	1.01	1.03	0.94	1.07	0.88	1.12
9	1.11	1.06	1.07	1.06	1.02	1.07	0.94	1.12	0.88	1.17
11	1.13	1.10	1.08	1.11	1.02	1.12	0.94	1.17	0.88	1.22
14	1.15	1.16	1.10	1.17	1.02	1.18	0.94	1.23	0.88	1.28
15	1.16	1.20	1.11	1.21	1.02	1.21	0.94	1.26	0.88	1.32

4.6.3. Piping Length Correction Factor

Correction Factor is based on the Equivalent Piping Length in meters (EL) and the Height between Outdoor and Indoor Unit in meters (H).

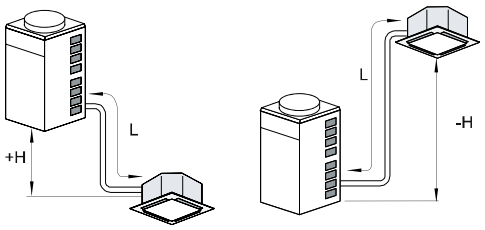

H:
Height between Indoor Unit and Outdoor Unit (m).

- H>0: Position of Outdoor Unit is higher than Position of Indoor Unit (m).
- H<0: Position of Outdoor Unit is lower than Position of Indoor Unit (m).

L:
Actual One-Way Piping Length between Indoor Unit and Outdoor Unit (m).

EL:
Equivalent One-Way Piping Length between Indoor Unit and Outdoor Unit (m).

NOTES:

- In order to ensure correct unit selection, consider the furthest Indoor Unit.
- In order to claculate the equivalente piping length, use the following equivalences:
  - A 90º angle is equivalent to 0.5 m.
  - A 180º angle is equivalent to 1.5 m.
  - A Multi-kit is equivalent to 0.5 m.
- If the Equivalent Piping Length (EL) is more than 100m, increase both the Liquid and the Gas Pipe by one size and use the Size-up Correction Factor. (See sections 7.1.3 and 7.1.64 for additional information)

HITACHI
Inspire the Next

◆ FSN(E)

RAS-5FSN / RAS-8FSN(E)

Cooling

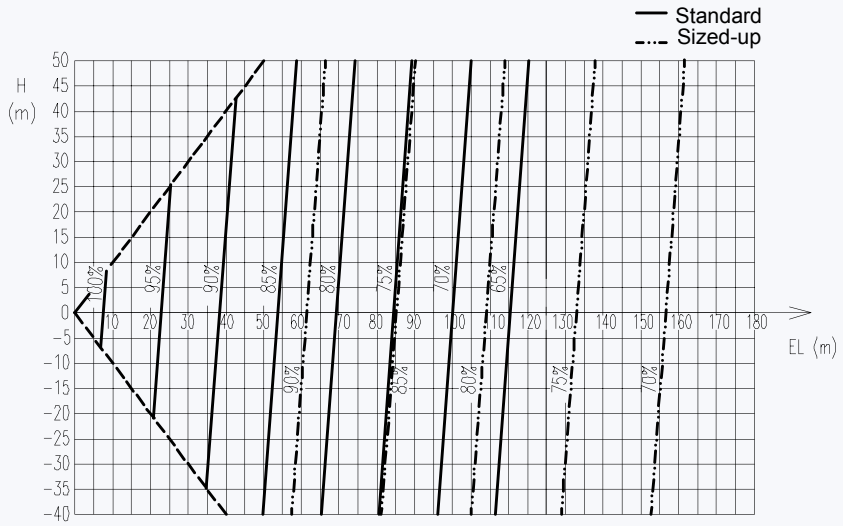

RAS-5~32FSN(E)

Cooling

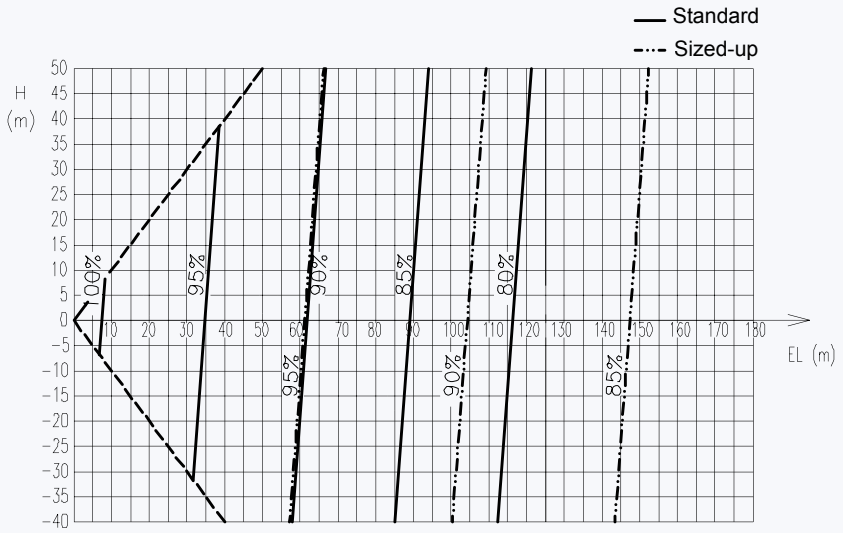

RAS-5~32FSN(E)

Heating

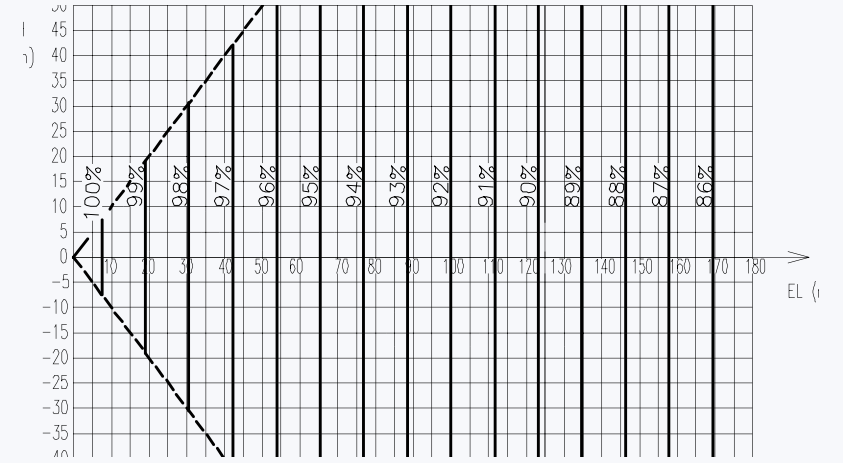

Cooling capacity:

The cooling capacity should be corrected according to the following formula:

TCA = TC x F

TCA:
Actual Corrected Cooling Capacity (kW).

TC:
Cooling Capacity from Cooling Capacity Table (kW).

F:
Correction factor based on the equivalent Piping Length (in %).

Heating Capacity:

The heating capacity should be corrected according to the following formula:

THA = TH x F

THA:
Actual Corrected Heating Capacity (kW).

TH:
Heating Capacity from Heating Capacity Table (kW).

F:
Correction factor based on the equivalent Piping Length (in %)

4

◆ **FXN(E)**

Cooling

RAS-8FXN(E)

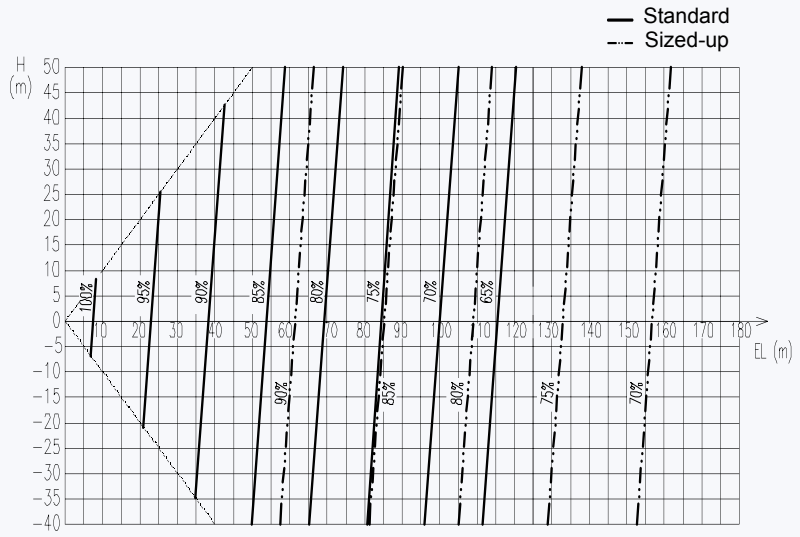

RAS-16FXN

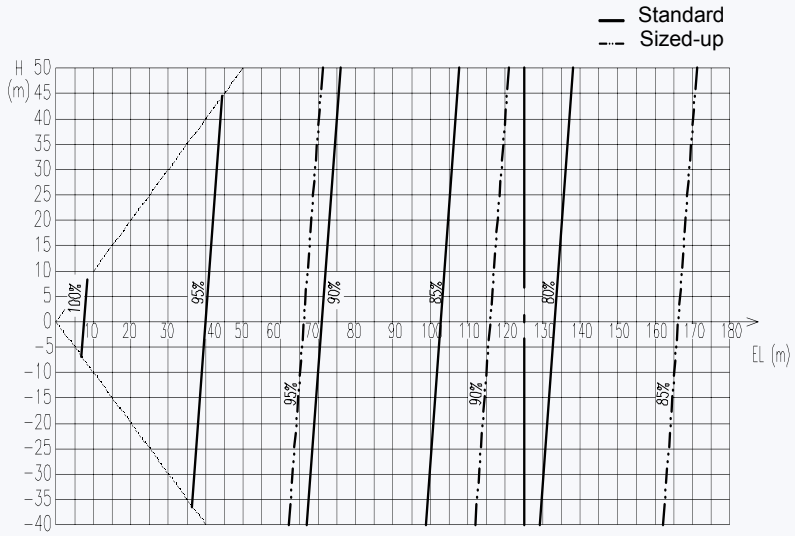

RAS-10~14FXN(E), RAS-20~32FXN

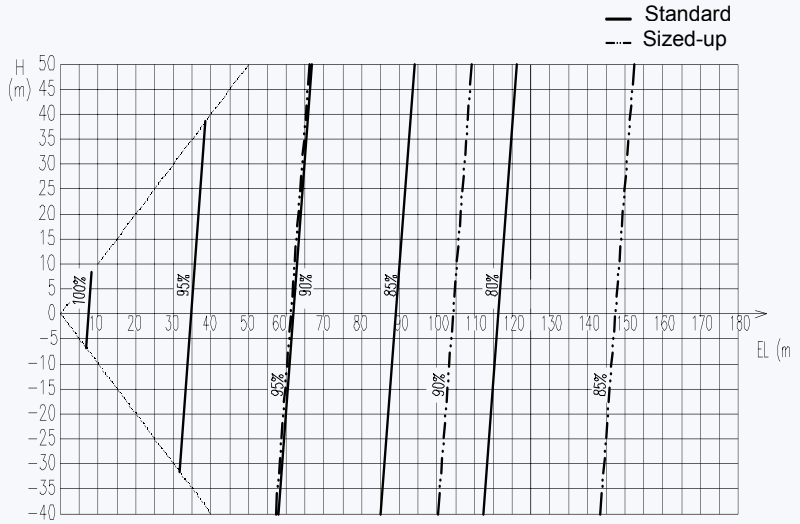

◆ **FXN(E) (Cont.)**

RAS-8~32FXN(E)

Heating

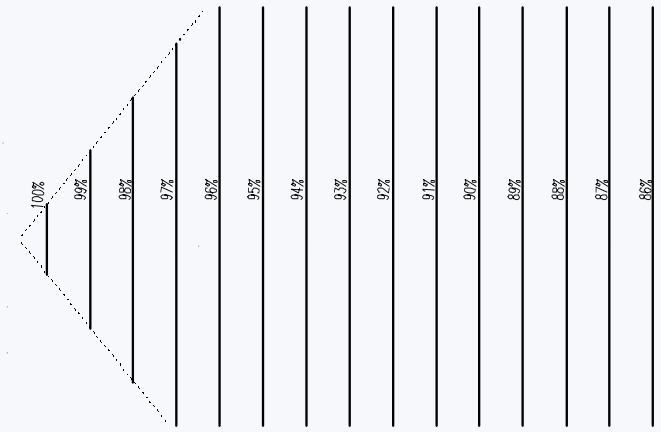

◆ **FSVN(E)**

RAS-3/4/5FSVNE

Cooling

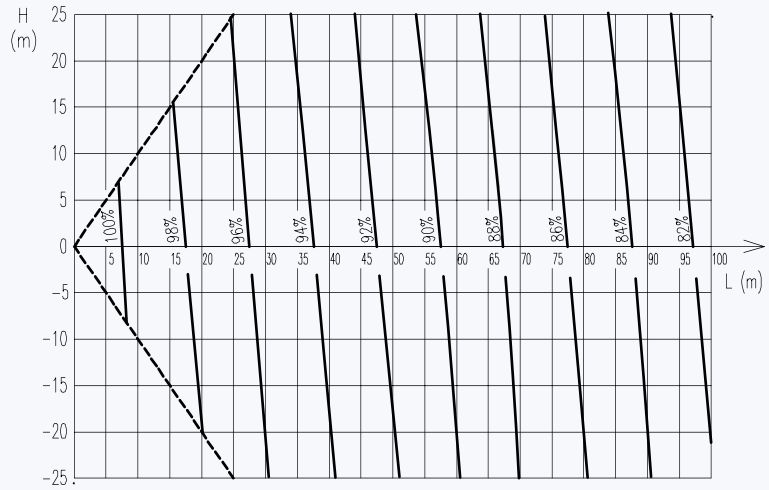

RAS-3/4/5FSVNE

Heating

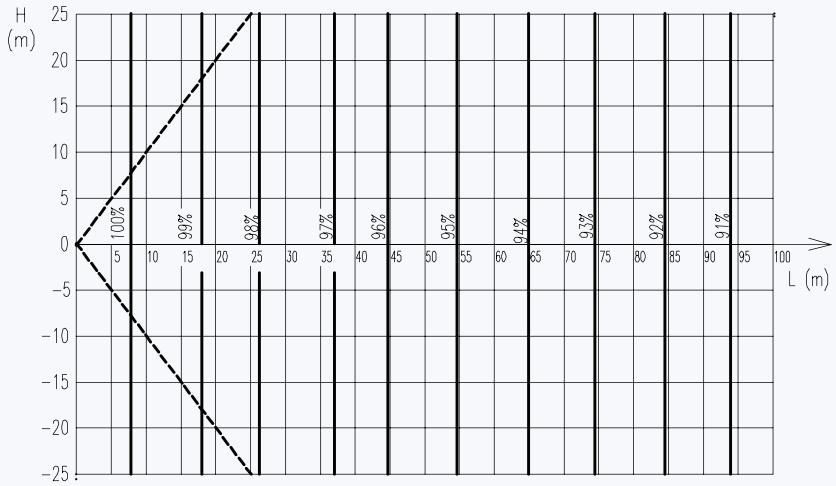

4

4.6.4. Defrost Correction Factor

The heating capacity excludes the condition of the frost or the defrosting operation period.

In consideration of the frost or the defrosting operation. the heating capacity is corrected by the equation below.

Corrected Heating Capacity =
Correction Factor x Heating Capacity

Outdoor Inlet Air Temp. (°C DB) (Relative Humidity=85%)	-20	-7	-5	-3	-0	3	5	7
Correction Factor	0.95	0.95	0.93	0.88	0.85	0.87	0.90	1.0

NOTE:

The correction factor is not valid for special conditions such as snowfall or operation in a transitional period.

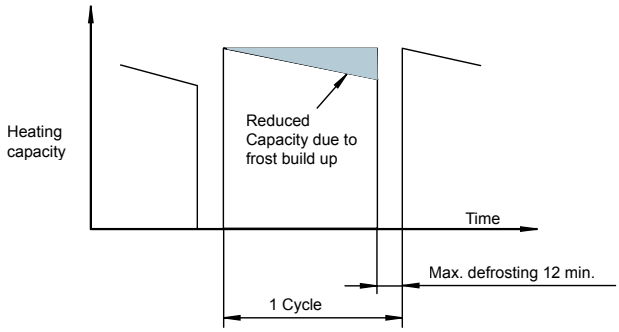

4.7. Sensible Heat Factor (SHF)

The sensible heat factor of Indoor Units at each fan speed (Hi, Me, Lo) based on JIS Standard B8616, is given below.

Indoor Unit Model	SHF		
	Hi	Med	Low
RCI -1.0FSN1E	0.80	0.77	0.75
RCI-1.5FSN1E	0.77	0.75	0.73
RCI -2.0FSN1E	0.78	0.76	0.75
RCI-2.5FSN1E	0.73	0.71	0.69
RCI -3.0FSN1E	0.79	0.76	0.72
RCI–3.5FSN1E	0.79	0.76	0.72
RCI -4.0FSN1E	0.78	0.75	0.72
RCI -5.0FSN1E	0.74	0.70	0.68
RCI -6.0FSN1E	0.73	0.69	0.68
RCIM-1.0FSN	0.74	0.71	0.70
RCIM-1.5FSN	0.74	0.71	0.70
RCIM-2.0FSN	0.71	0.68	0.67
RCD-1.0FSN	0.85	0.78	0.75
RCD-1.5FSN	0.73	0.69	0.66
RCD-2.0FSN	0.75	0.67	0.65
RCD–2.5FSN	0.74	0.67	0.65
RCD-3.0FSN	0.74	0.67	0.65
RCD-4.0FSN	0.73	0.67	0.65
RCD–5.0FSN	0.69	0.67	0.65
RPC-2.0FSNE	0.72	0.70	0.67
RPC-2.5FSNE	0.72	0.70	0.67
RPC-3.0FSNE	0.72	0.70	0.67
RPC–3.5FSNE	0.72	0.70	0.67
RPC-4.0FSNE	0.72	0.70	0.67
RPC-5.0FSNE	0.72	0.70	0.67
RPC–6.0FSNE	0.72	0.70	0.67
RPK–1.0FSN1M	0.73	0.72	0.70
RPK -1.5FSN1M	0.73	0.72	0.70
RPK–0.8FSNM	0.73	0.72	0.70
RPK-1.0FSNM	0.73	0.72	0.70
RPK–1.5FSNM	0.73	0.72	0.70
RPK–2.0FSNM	0.72	0.72	0.70
RPK-2.5FSNM	0.72	0.72	0.70
RPK-3.0FSNM	0.71	0.72	0.70
RPK-3.5FSNM	0.71	0.72	0.70
RPK-4.0FSNM	0.71	0.72	0.70
RPI-0.8FSN1E	0.81	0.69	0.69
RPI-1.0FSN1E	0.81	0.69	0.69
RPI-1.5FSN1E	0.73	0.69	0.65
RPI-2.0FSN1E	0.76	0.75	0.74
RPI-2.5FSN1E	0.76	0.74	0.72
RPI-3.0FSN1E	0.75	0.71	0.67
RPI-3.5FSN1E	0.75	0.71	0.67
RPI-4.0FSN1E	0.73	0.71	0.65
RPI-5-0FSN1E	0.72	0.68	0.64
RPI-6.0FSN1E	0.72	0.69	0.67
RPI-8.0FSNE	0.70	0.68	0.63
RPI-10.0FSNE	0.71	0.68	0.64
RPF-1.0FSNE	0.73	0.69	0.65
RPF-1.5FSNE	0.73	0.69	0.65
RPF–2.0FSNE	0.73	0.69	0.65
RPF–2.5FSNE	0.73	0.69	0.65
RPFI-1.0FSNE	0.73	0.69	0.65
RPFI-1.5FSNE	0.73	0.69	0.65
RPFI–2.0FSNE	0.73	0.69	0.65
RPFI–2.5FSNE	0.73	0.69	0.65

4.8. Fan Performance

4.8.1. RPI-0.8~1.5 – Fan Performance

RPI-0.8-1.0

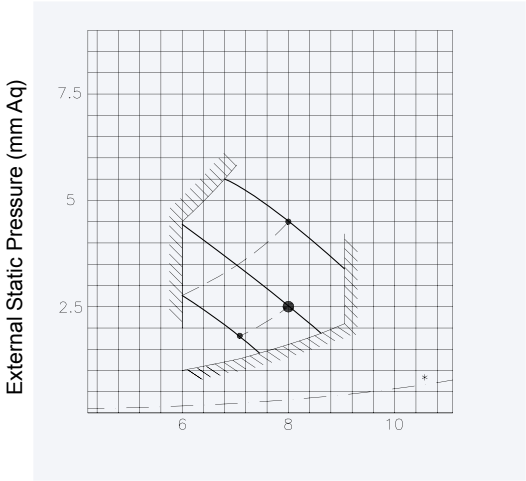

RPI-1.5

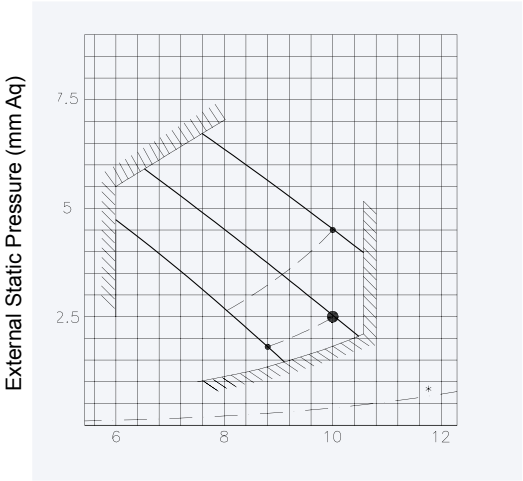

NOTES:

- · – · *Standard filter pressure loss*
- „●" *Nominal Point*

Meaning of the nominal performance values for fan RPI-0.8~1.5:

Static Pressure Configuration \ Fan speed (RCS)	Hi	Med	Low
SP-01	v1	v2	v3
SP-00 (*)	v2	v2	v3
SP-02	v2	v2	v3

(*): STD Factory supplied
SP: Static Pressure
v(1,2,3,4): Fan step
RCS: Remote Control

ATTENTION:

In the specific case of the RPI 08/1.0 units, with an "extra short" duct installation, or being within the working range limit of the unit, a lower fan speed is available (v4). To perform this operation, the installer must disconnect pin No. 4 and change it for pin No. 5 in the fan motor connector, (in the electrical box), as explained in the diagram below. The static pressure must be kept in SP-00.
This operation is not allowed for installations with a high static pressure (long duct); for those cases choose SP-01, (keeping pin No. 4 in its initial position)

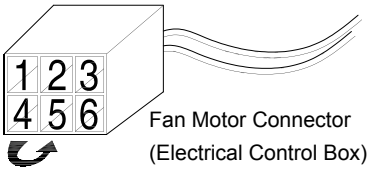

(Refer to the CN22 in the Electrical Wiring chapter off the service manual)

After changing the pin, the fan's performance will change as shown in the figure

RPI-0.8/1.0FSN1E

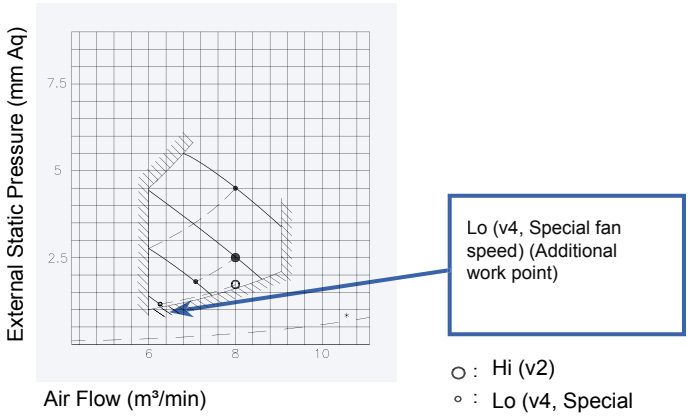

4.8.2. RPI-2.0~6.0 – Fan Performance

RPI-2.0

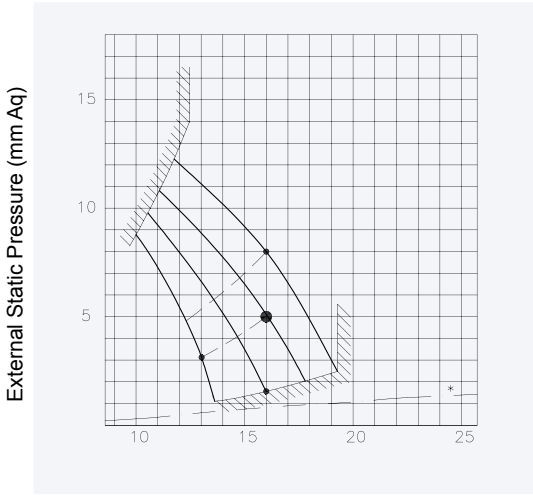

RPI-2.5

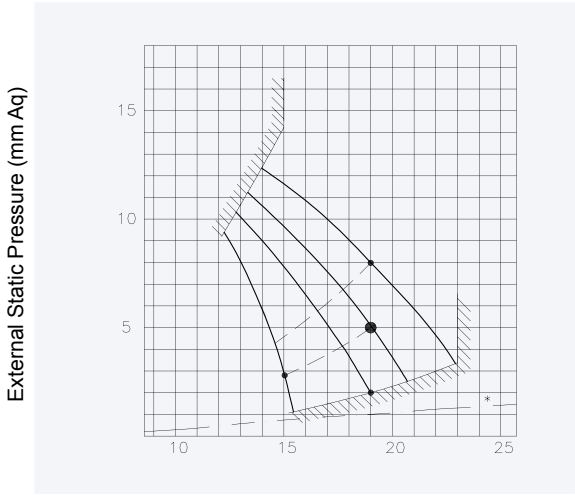

RPI-3.0/3.5

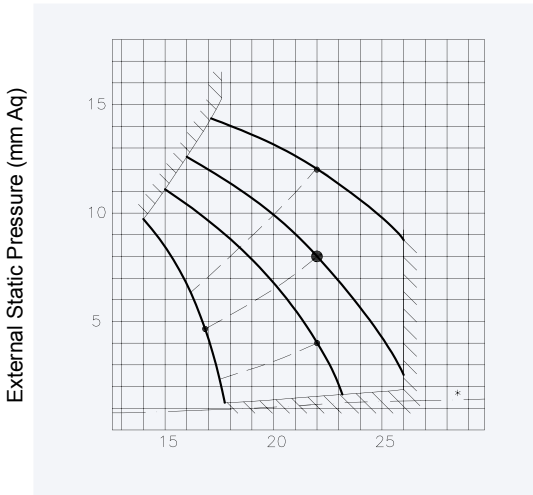

RPI-4.0

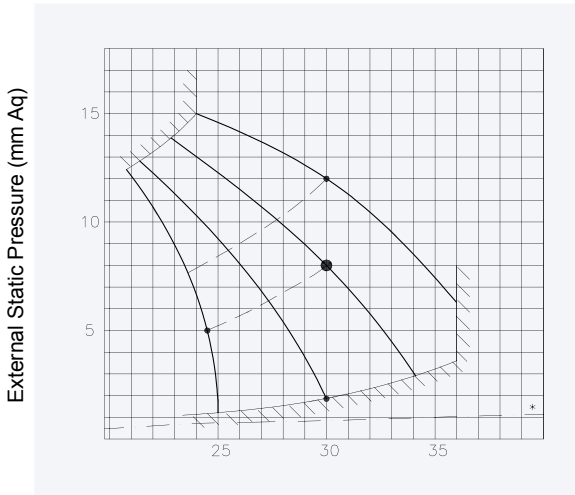

RPI-5.0

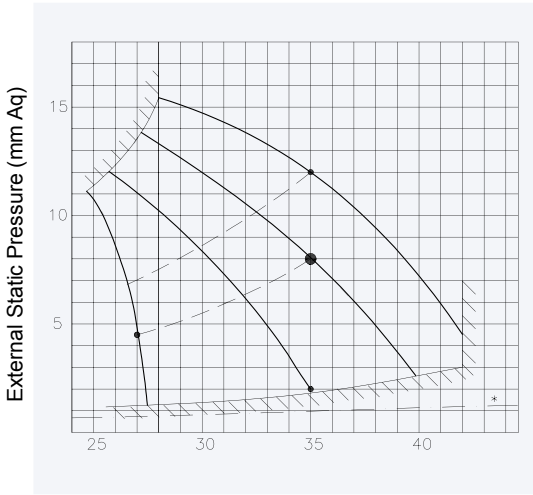

RPI-6.0

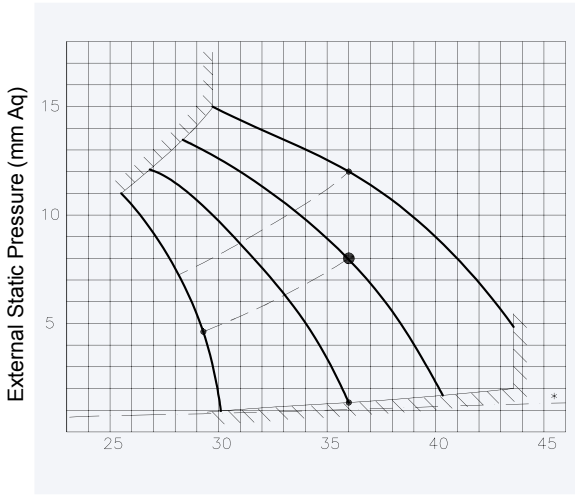

NOTES:

- · — · *Standard filter pressure loss*
- „ ● „ *Nominal Point*

4

◆ **RPI-2.0~6.0 – Fan Performance (Cont.)**

NOTE:

Meaning of the nominal performance values for fan RPI-2.0~6.0:

Static pressure configuration \ Fan speed (RCS)	Hi	Med	Low
SP-01	v1	v2	v4
SP-00 (*)	v2	v3	v4
SP-02	v3	v3	v4

(*): STD Factory supplied
SP: Static Pressure
v(1,2,3): Fan step
RCS: Remote Control

ATTENTION:

For RPI 2.0~6.0 HP units, in the case of installations with a short duct, make sure to select SP-02 on the remote control switch.
In order to configure SP-02, check the optional functions C5→"02" , low static pressure option
Keep a minimum resistance in the duct, as shown in the fan performance graphics.
If you turn on the unit with a duct that is too short, this will cause the unit to operate outside the acceptable working range.

4.8.3. RPI-8.0/10.0 – Fan Performance

RPI-8.0

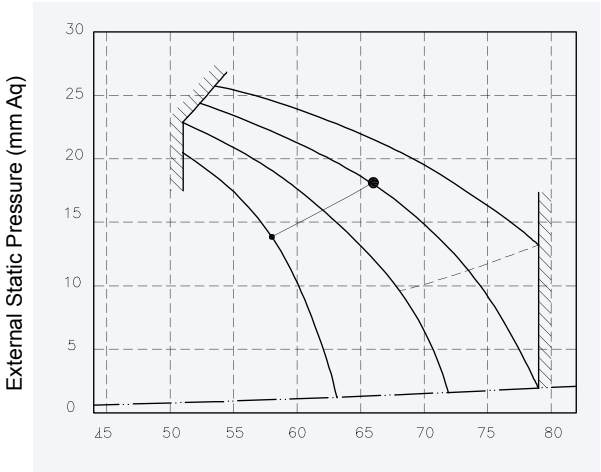

RPI-10.0

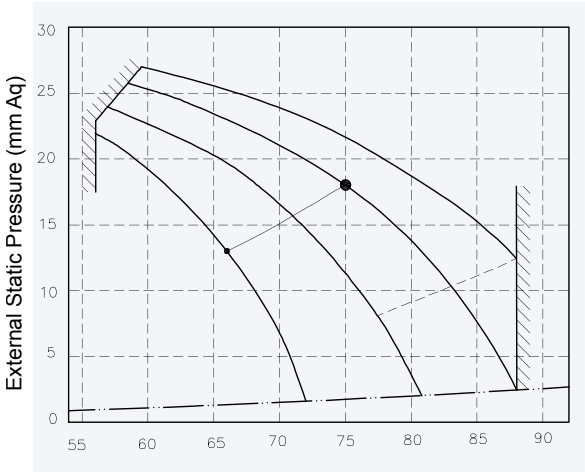

NOTES:

- · — · *Standard filter pressure loss*
- „●„ *Nominal Point*

Meaning of the nominal performance values for fan RPI-8.0/10.0:

Static pressure configuration \ Fan speed (RCS)	Hi	Med	Low
HSP	v1	v1	v3
LSP (*)	v2	v2	v4

(*): STD Factory supplied
HSP: High Static Pressure
HSP: Low Static Pressure
v(1,2,3): Fan step
RCS: Remote Control

ATTENTION:

For RPI 8.0/10.0 HP units, in a case of installations with an extra short duct, make sure that the low static pressure is selected correctly.
Keep a minimum resistance in the duct, as shown in the fan performance graphics.
If you turn on the unit with a duct that is too short, this will cause the unit to operate outside the acceptable working range.

4.8.4. KPI – Fan Performance

KPI-2521

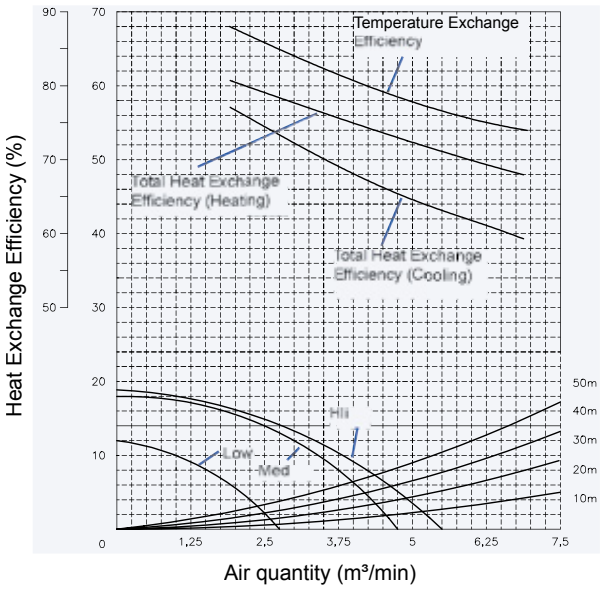

KPI-5021

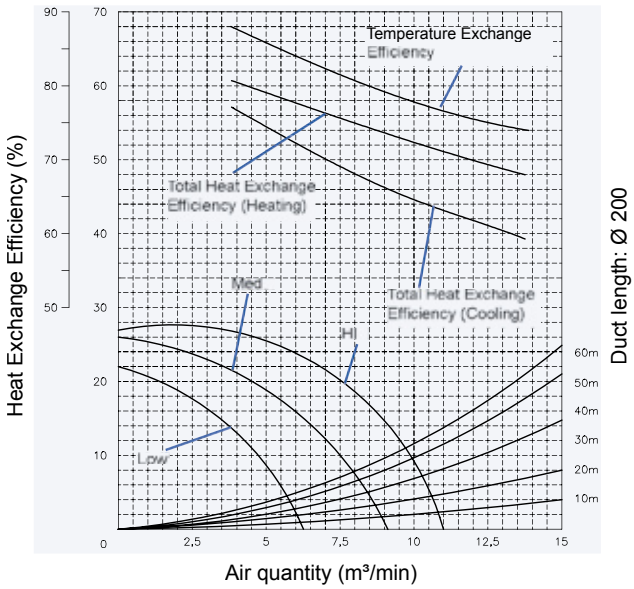

KPI-8021

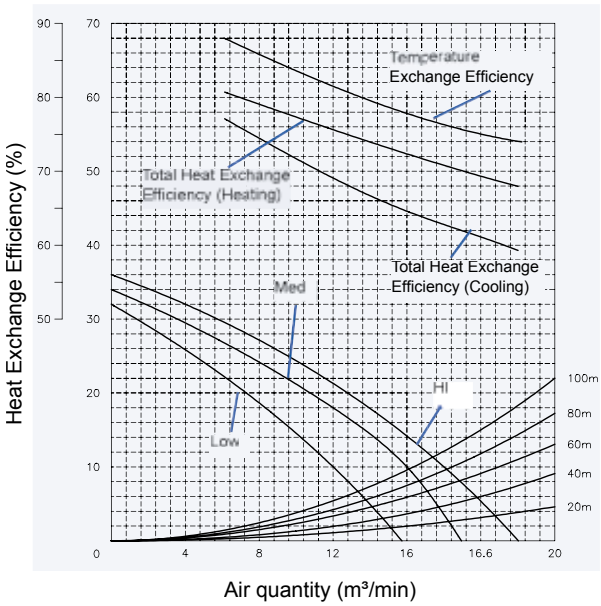

KPI-10021

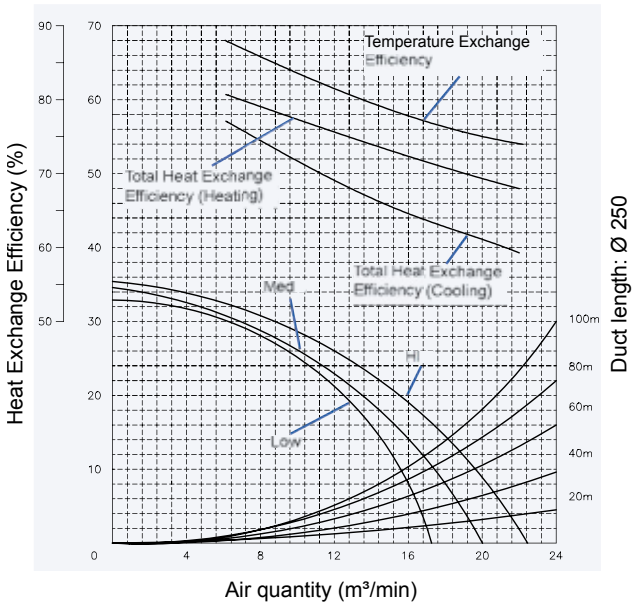

4

4.9. Temperature Distribution Diagrams

4.9.1. RCI – 4-Way Cassette Type

	Vertical Temperature distribution		Horizontal Temperature distribution (Height: 1.2 m)	
	Cooling (Indoor temperature: 27°C DB / 19°C WB)	**Heating (Indoor temperature: 20°C DB)**	**Cooling (Indoor temperature: 27°C DB / 19°C WB)**	**Heating (Indoor temperature: 20 °C DB)**
Model: RCI-1.0/1.5FSN1E Air-Throw-Distance: 2.7 m (when air velocity is: 0.3m/s	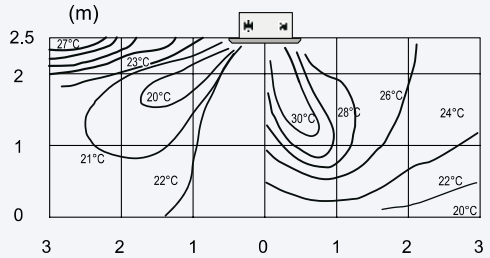		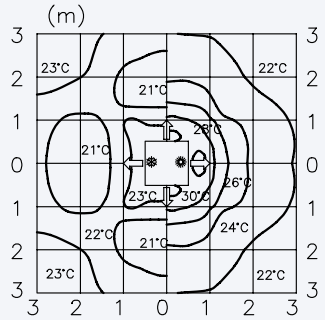	
Model: RCI -2.0FSN1E Air-Throw-Distance: 2.7 m (when air velocity is: 0.3m/s	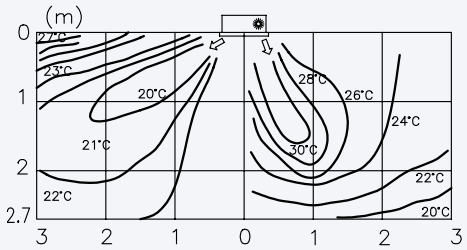		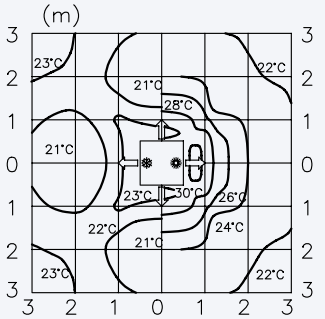	
Model: RCI-2.5FSN1E Air-Throw-Distance: 2.7 m (when air velocity is: 0.3m/s	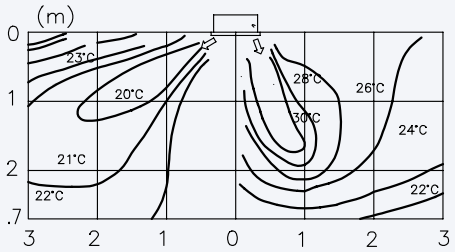		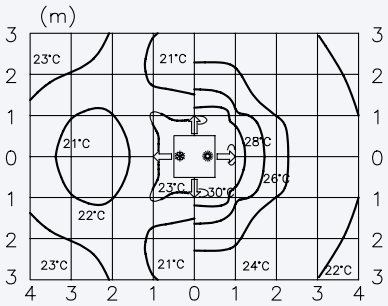	
Model: RCI-3.0/3.5FSN1E Air-Throw-Distance: 3.3 m (when air velocity is: 0.3m/s	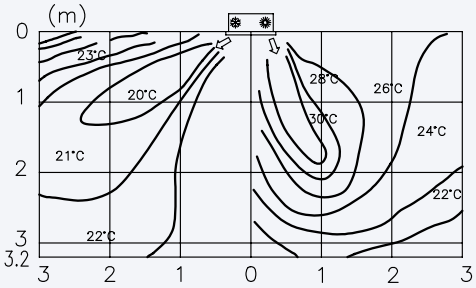		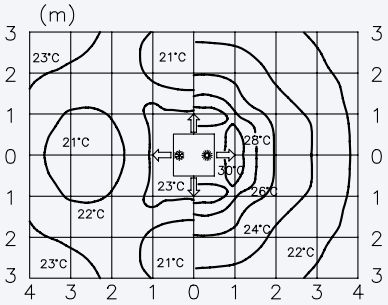	

NOTE:

The Air is almost symmetrically discharged.
These figures show the distribution when no obstruction exists.

◆ RCI – 4-Way Cassette Type (Cont.)

	Vertical Temperature distribution		Horizontal Temperature distribution (Height: 1.2 m)	
	Cooling (Indoor temperature: 27°C DB / 19°C WB)	**Heating (Indoor temperature: 20°C DB)**	**Cooling (Indoor temperature: 27°C DB / 19°C WB)**	**Heating (Indoor temperature: 20 °C DB)**
Model: RCI -4.0FSN1E Air-Throw-Distance: 3.3 m (when air velocity is: 0.3m/s	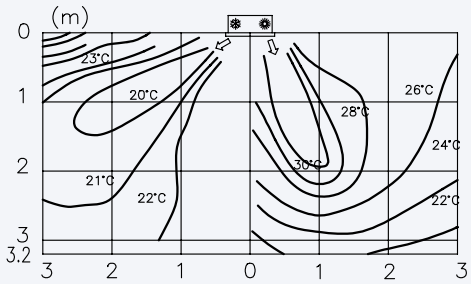		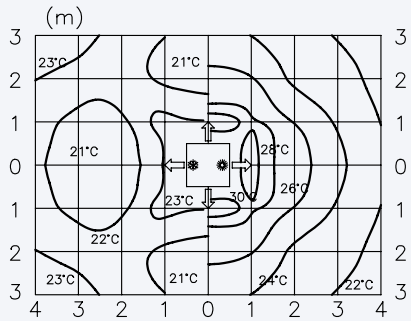	
Model: RCI -5.0FSN1E Air-Throw-Distance: 3.3 m (when air velocity is: 0.3m/s	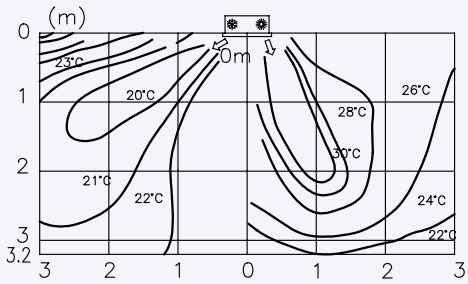		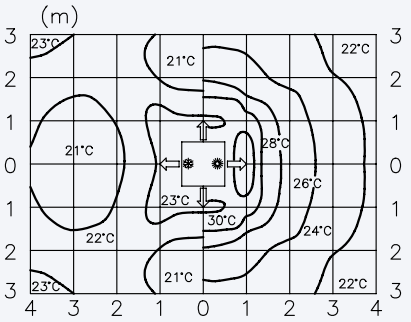	
Model: RCI -6.0FSN1E Air-Throw-Distance: 3.3 m (when air velocity is: 0.3m/s	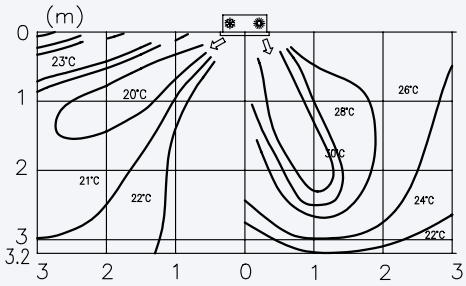		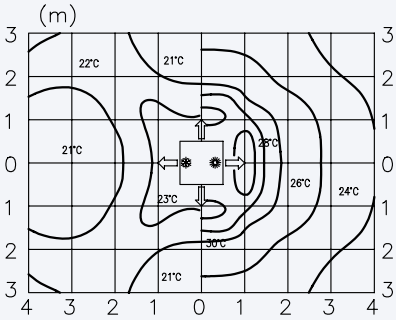	

4

NOTE:

The Air is almost symmetrically discharged.
These figures show the distribution when no obstruction exists.

◆ RCIM – 4-Way Cassette Type

	Vertical Temperature distribution		Horizontal Temperature distribution (Height: 1.2 m)
	Cooling (Indoor temperature: 27°C DB / 19°C WB)	**Heating (Indoor temperature: 20°C DB)**	**Cooling (Indoor temperature: 27°C DB / 19°C WB)**
Model: RCIM-1.0FSN Air-Throw-Distance: 2.7 m (when air velocity is: 0.3m/s	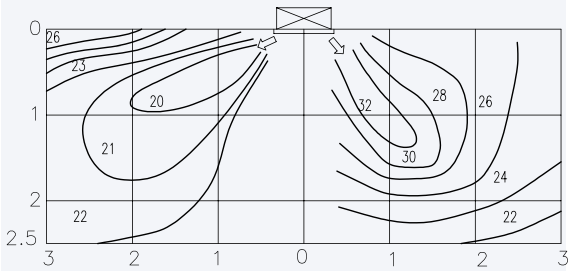		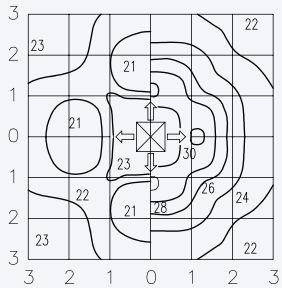
Model: RCIM-1.5FSN Air-Throw-Distance: 2.7 m (when air velocity is: 0.3m/s	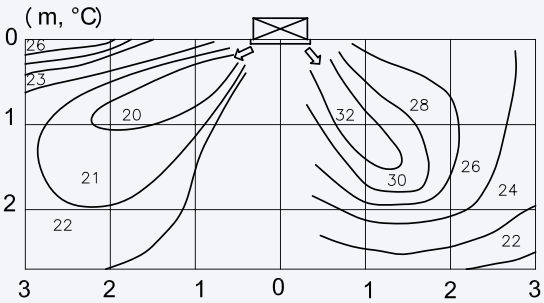		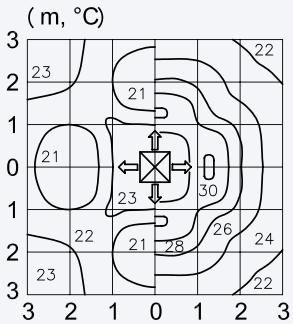
Model: RCIM-2.0FSN Air-Throw-Distance: 2.7 m (when air velocity is: 0.3 m/s)	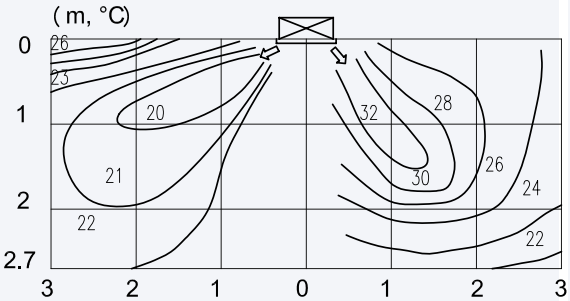		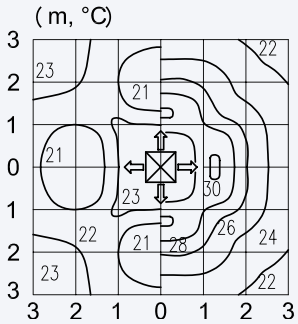

NOTE:

The Air is almost symmetrically discharged.
These figures show the distribution when no obstruction exists.

4.9.2. RCD – 2-Way Cassette Type

	Vertical Temperature distribution		Horizontal Temperature distribution (Height: 1.2 m)	
	Cooling (Indoor temperature: 27°C DB / 19°C WB)	Heating (Indoor temperature: 20°C DB)	Cooling (Indoor temperature: 27°C DB / 19°C WB)	Heating (Indoor temperature: 20 °C DB)
Model: RCD-1.0/1.5FSN Air-Throw-Distance: 2.8 m (when air velocity is: 0.3m/s	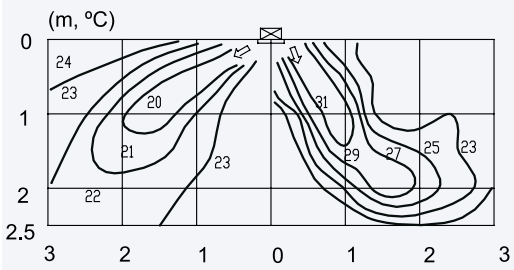		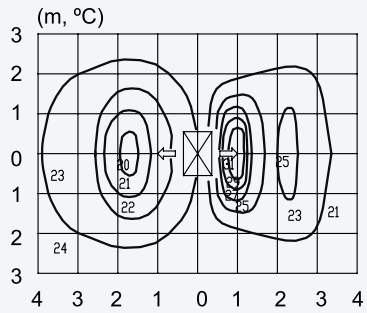	
Model: RCD-2.0FSN Air-Throw-Distance: 3.0 m (when air velocity is: 0.3m/s	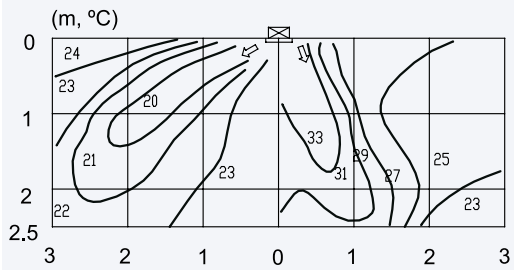		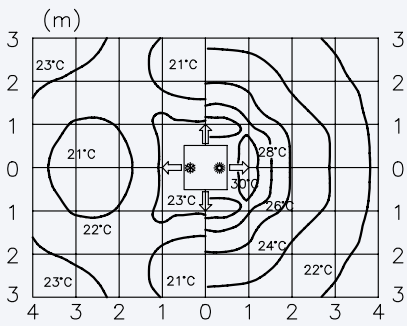	
Model: RCD–2.5FSN Air-Throw-Distance: 3.0 m (when air velocity is: 0.3m/s	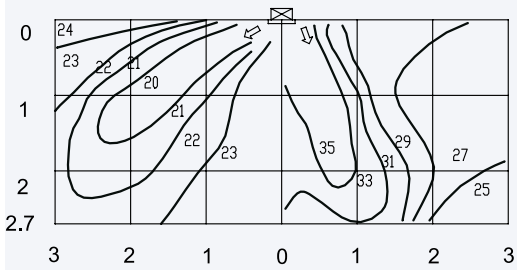		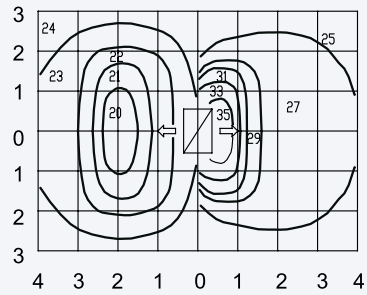	

4

NOTE:

The Air is almost symmetrically discharged.
These figures show the distribution when no obstruction exists.

◆ **RCD 2-Way Cassette Type (cont).**

	Vertical Temperature distribution		Horizontal Temperature distribution (Height: 1.2 m)	
	Cooling (Indoor temperature: 27°C DB / 19°C WB)	**Heating (Indoor temperature: 20°C DB)**	**Cooling (Indoor temperature: 27°C DB / 19°C WB)**	**Heating (Indoor temperature: 20 °C DB)**
Model: RCD-3.0FSN Air-Throw-Distance: 3.1 m (when air velocity is: 0.3m/s	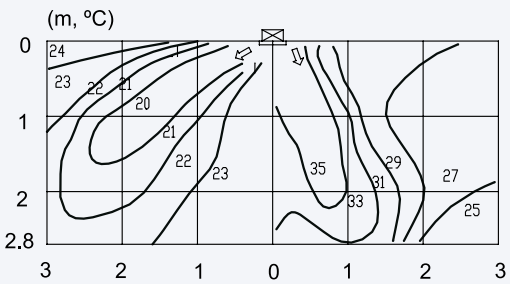		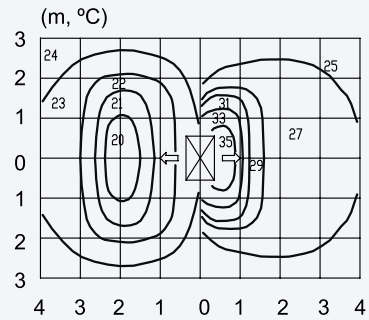	
Model: RCD-4.0FSN Air-Throw-Distance: 3.3 m (when air velocity is: 0.3m/s	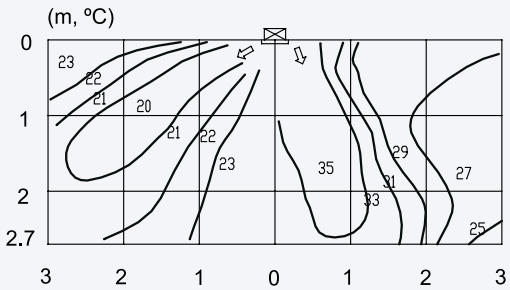		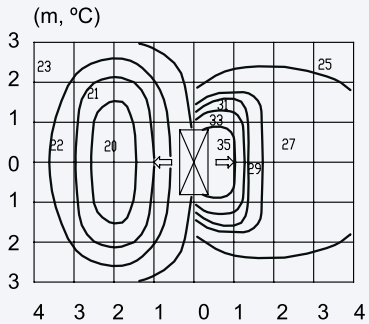	
Model: RCD–5.0FSN Air-Throw-Distance: 3.3 m (when air velocity is: 0.3m/s	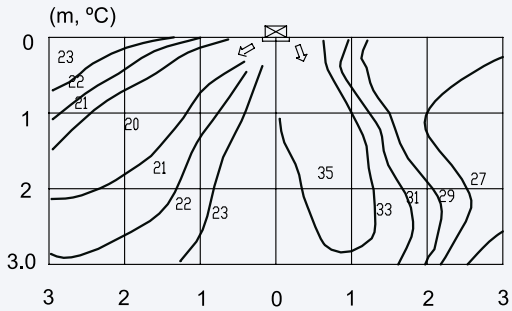		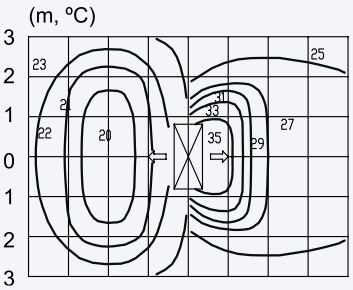	

NOTE:

The Air is almost symmetrically discharged.
These figures show the distribution when no obstruction exists.

4.9.3. RPC – Ceiling Type

	Vertical Temperature distribution		Horizontal Temperature distribution (Height: 1.2 m)	
	Cooling (Indoor temperature: 27°C DB / 19°C WB)	**Heating (Indoor temperature: 20°C DB)**	**Cooling (Indoor temperature: 27°C DB / 19°C WB)**	**Heating (Indoor temperature: 20 °C DB)**
Model: RPC-2.0/2.5FSNE Air-Throw-Distance: 4.9 m (when air velocity is: 0.5 m/s	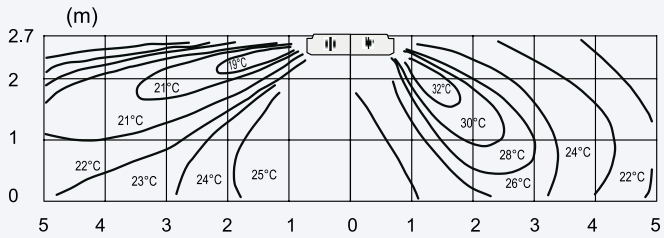			
Model: RPC-3.0~4.0FSNE Air-Throw-Distance: 6.9 m (when air velocity is: 0.3m/s	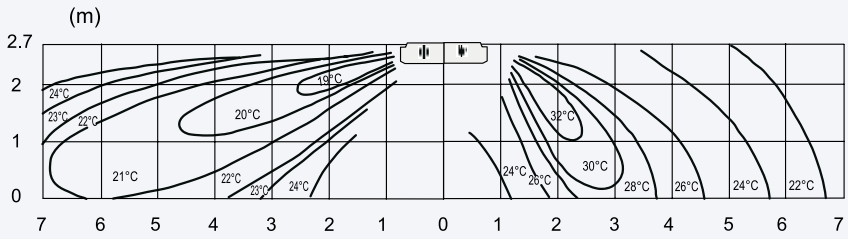			
Model: RPC-5.0/6.0FSNE Air-Throw-Distance: 7.5 m (when air velocity is: 0.3m/s	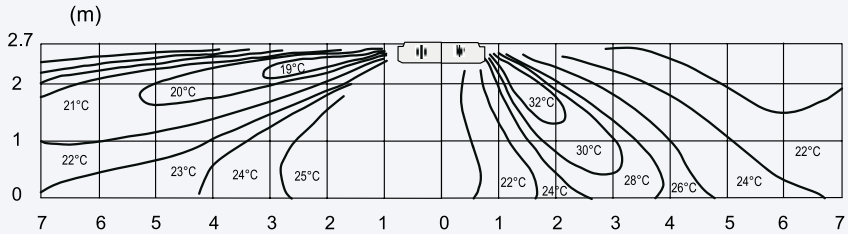			

4

NOTE:

The Air is almost symmetrically discharged.
These figures show the distribution when no obstruction exists.

4.10. Sound Data

4.10.1. RCI – 4-Way Cassette Type

Model: RCI-1.0	Power source: 230V 50 Hz
Measurement point:	1.5 meters below the unit
	Noise Criteria Curve
	Hi/Me/Lo: 32/30/28 dB(A)

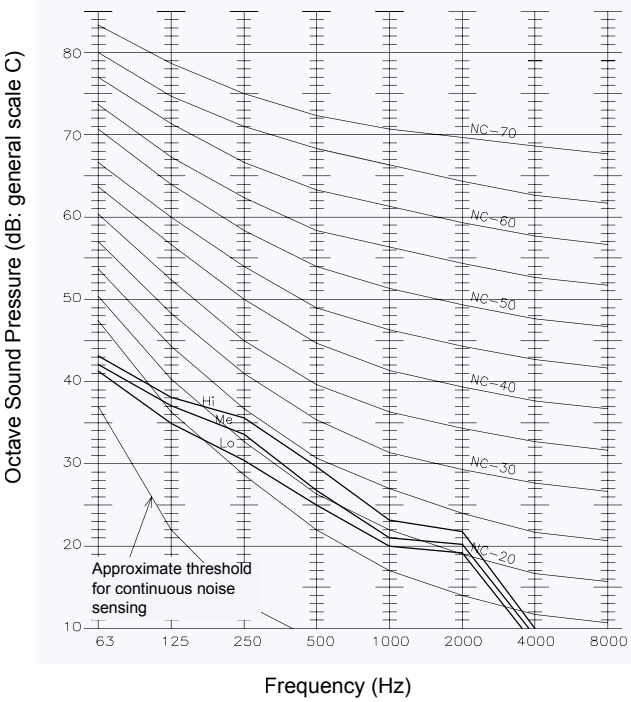

Model: RCI-1.5	Power source: 230V 50 Hz
Measurement point:	1.5 meters below the unit
	Noise Criteria Curve
	Hi/Me/Lo: 32/30/28 dB(A)

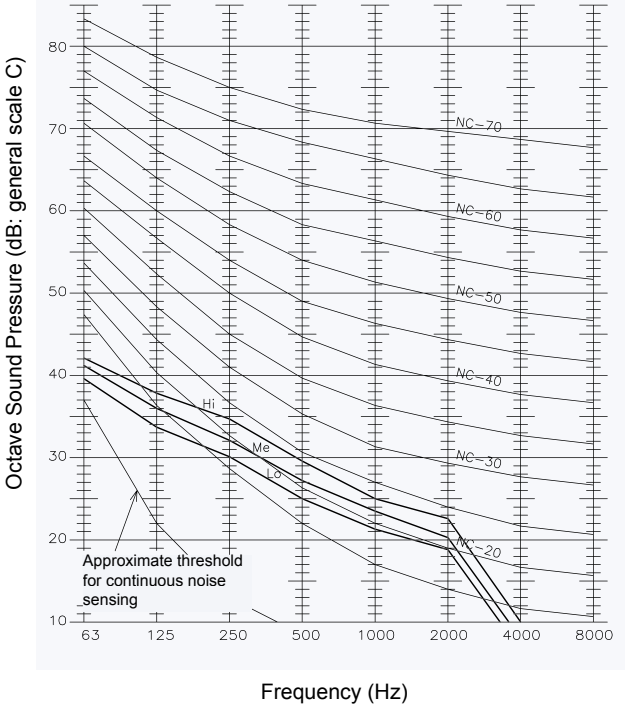

Model: RCI-2.0	Power source: 230V 50 Hz
Measurement point:	1.5 meters below the unit
	Noise Criteria Curve
	Hi/Me/Lo: 32/30/28 dB(A)

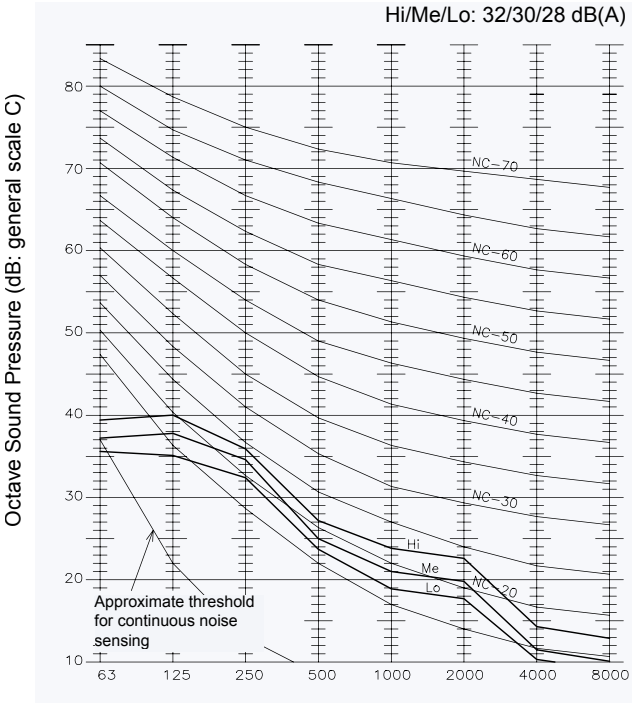

Model: RCI-2.5	Power source: 230V 50 Hz
Measurement point:	1.5 meters below the unit
	Noise Criteria Curve
	Hi/Me/Lo: 32/30/28 dB(A)

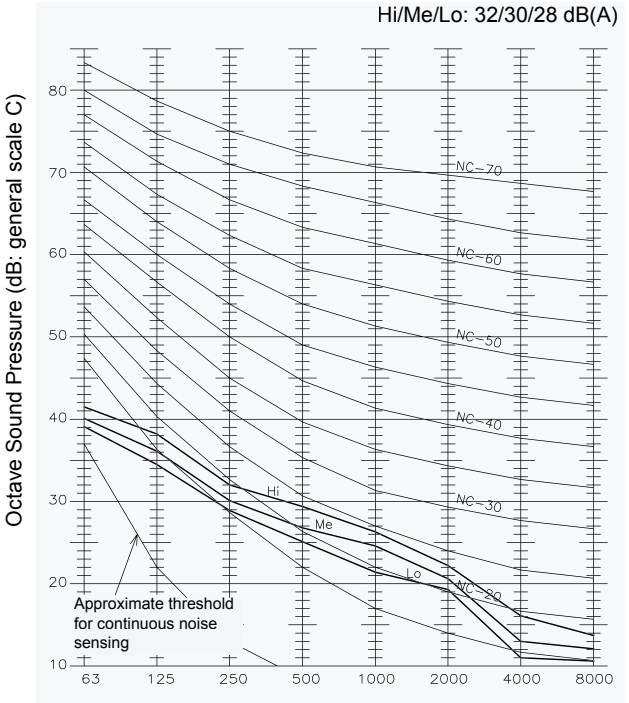

◆ RCI – 4-Way Cassette Type (Cont.)

Model: RCI-3.0/3.5	Power source: 230V 50 Hz
Measurement point:	1.5 meters below the unit
	Noise Criteria Curve
	Hi/Me/Lo: 34/32/30 dB(A)

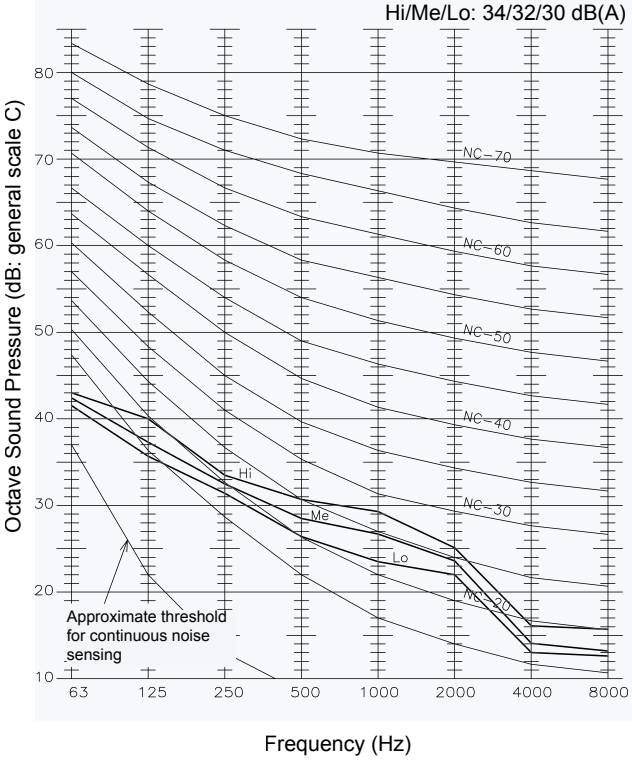

Model: RCI-4.0	Power source: 230V 50 Hz
Measurement point:	1.5 meters below the unit
	Noise Criteria Curve
	Hi/Me/Lo: 38/35/33 dB(A)

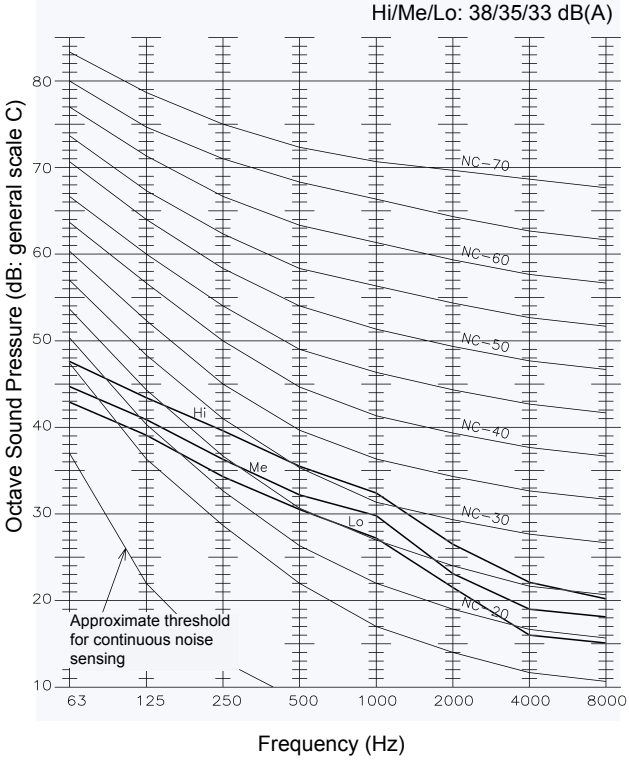

Model: RCI-5.0	Power source: 230V 50 Hz
Measurement point:	1.5 meters below the unit
	Noise Criteria Curve
	Hi/Me/Lo: 39/37/35 dB(A)

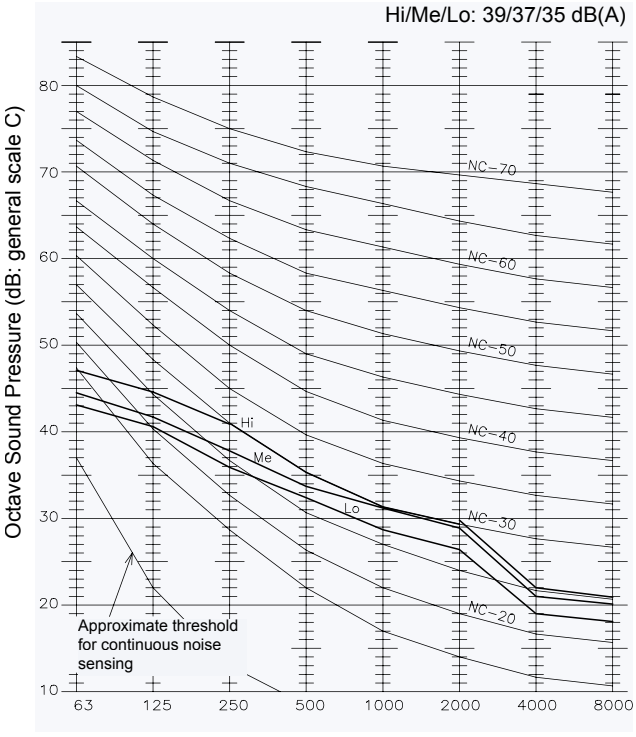

Model: RCI-6.0	Power source: 230V 50 Hz
Measurement point:	1.5 meters below the unit
	Noise Criteria Curve
	Hi/Me/Lo: 42/40/36 dB(A)

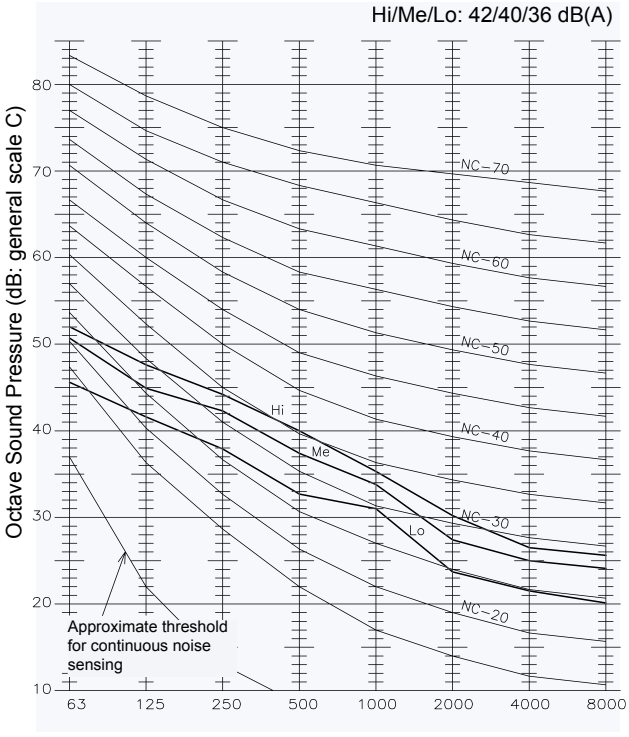

◆ RCI – 4-Way Cassette Type (Cont.)

Model: RCIM-1.0/1.5	Power source: 230 V 50 Hz
Measurement point:	1.5 meters below the unit
	Noise Criteria Curve
	Hi/Me/Lo: 1.0: 36/34/32 dB(A) 1.5: 38/35/32 dB(A)

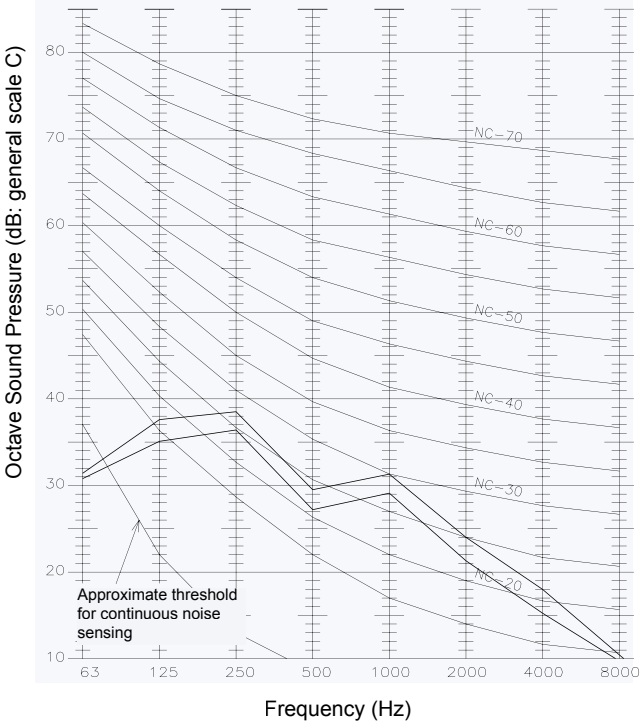

Model: RCI-2.0	Power source: 230 V 50 Hz
Measurement point:	1.5 meters below the unit
	Noise Criteria Curve
	Hi/Me/Lo: 42/39/32 dB(A)

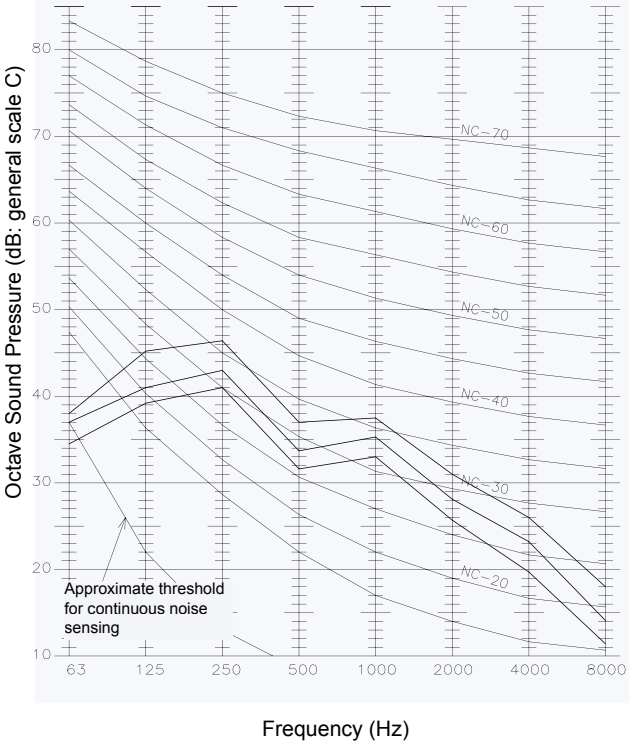

4.10.2. RCD – 2-Way Cassette Type

Model: RCD-1.0	Power source: 230 V 50 Hz
Measurement point:	1.5 meters below the unit
	Noise Criteria Curve
	Hi/Me/Lo: 34/32/30 dB(A)

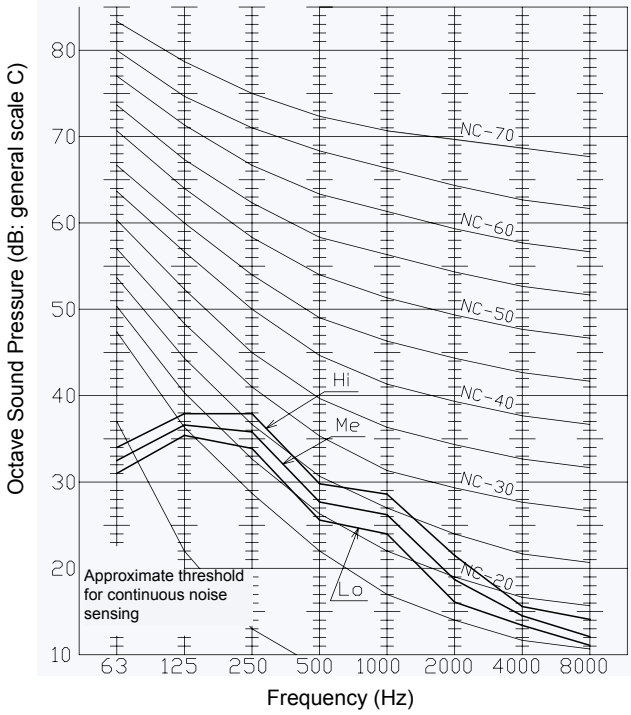

Model: RCD-1.5	Power source: 230 V 50 Hz
Measurement point:	1.5 meters below the unit
	Noise Criteria Curve
	Hi/Me/Lo: 35/32/30 dB(A)

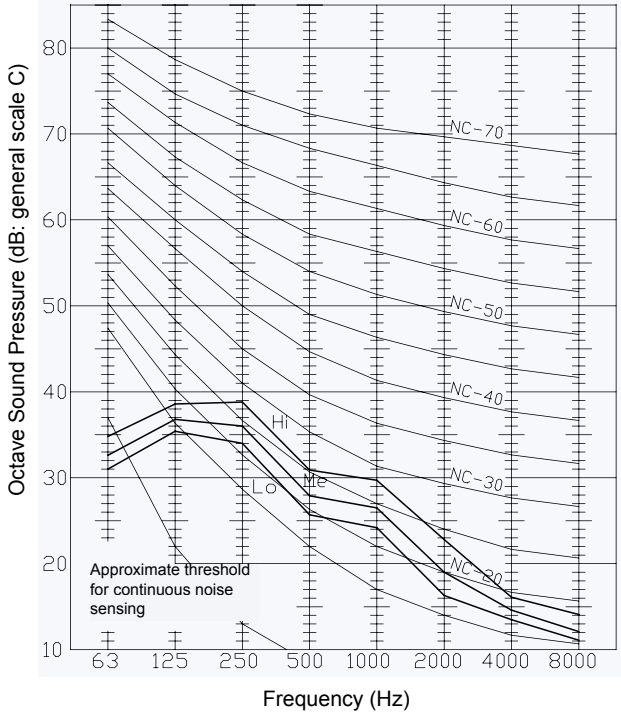

Model: RCD-2.0	Power source: 230 V 50 Hz
Measurement point:	1.5 meters below the unit
	Noise Criteria Curve
	Hi/Me/Lo: 35/32/30 dB(A)

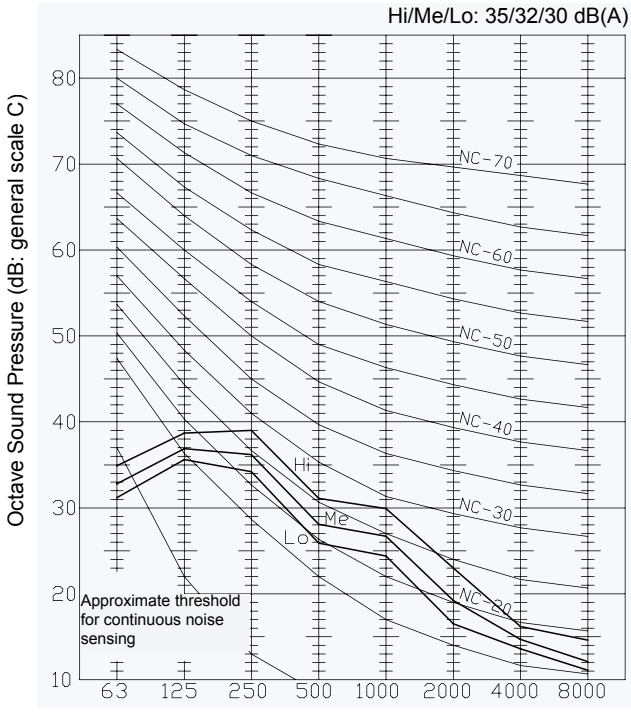

Model: RCD-2.5	Power source: 230 V 50 Hz
Measurement point:	1.5 meters below the unit
	Noise Criteria Curve
	Hi/Me/Lo: 38/34/31 dB(A)

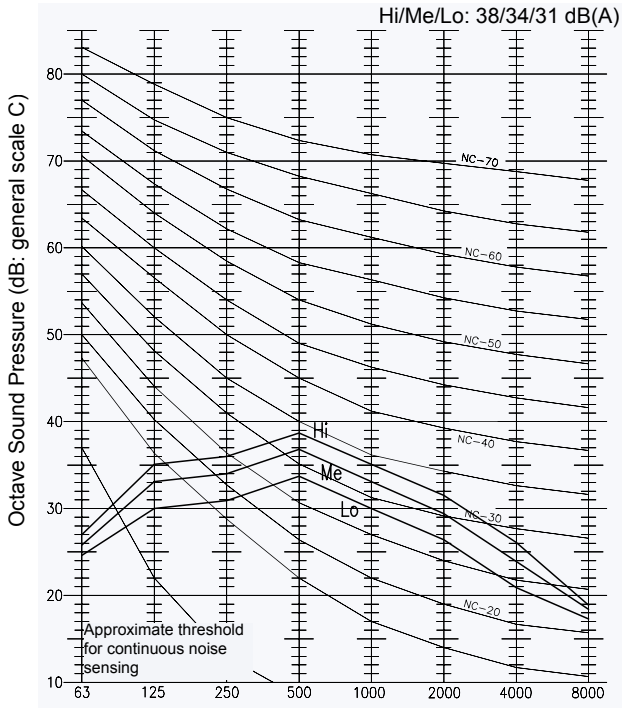

◆ **RCD 2 – Way Cassette Type (cont).**

Model: RCD-3.0	Power source: 230 V 50 Hz
Measurement point:	1.5 meters below the unit
	Noise Criteria Curve
	Hi/Me/Lo: 40/36/33 dB(A)

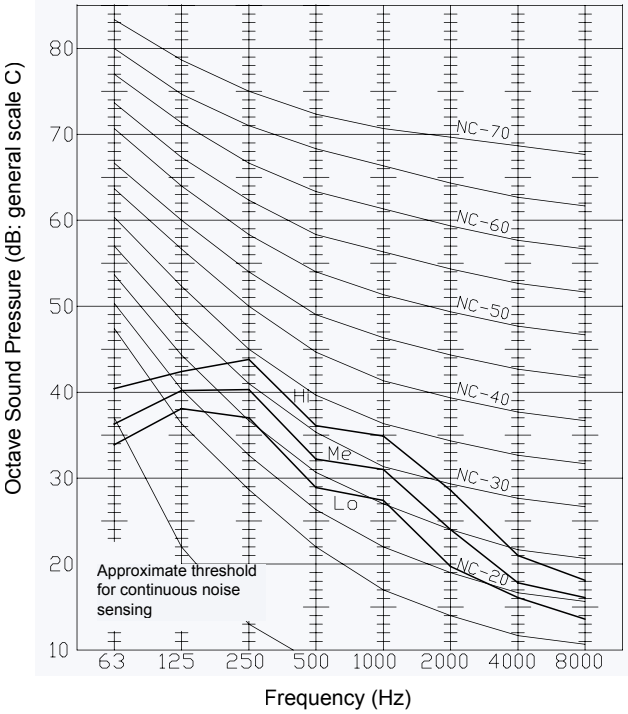

Model: RCD-4.0	Power source: 230 V 50 Hz
Measurement point:	1.5 meters below the unit
	Noise Criteria Curve
	Hi/Me/Lo: 40/36/33 dB(A)

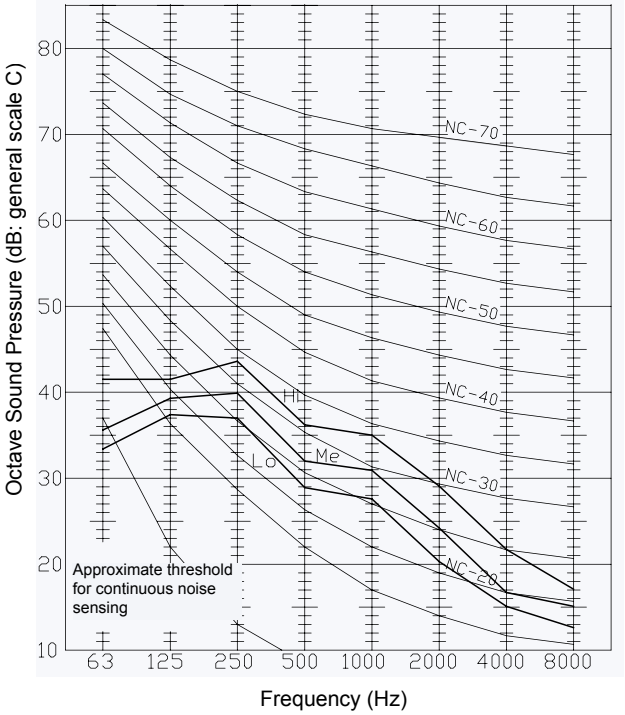

Model: RCD-5.0	Power source: 230 V 50 Hz
Measurement point:	1.5 meters below the unit
	Noise Criteria Curve
	Hi/Me/Lo: 43/40/36 dB(A)

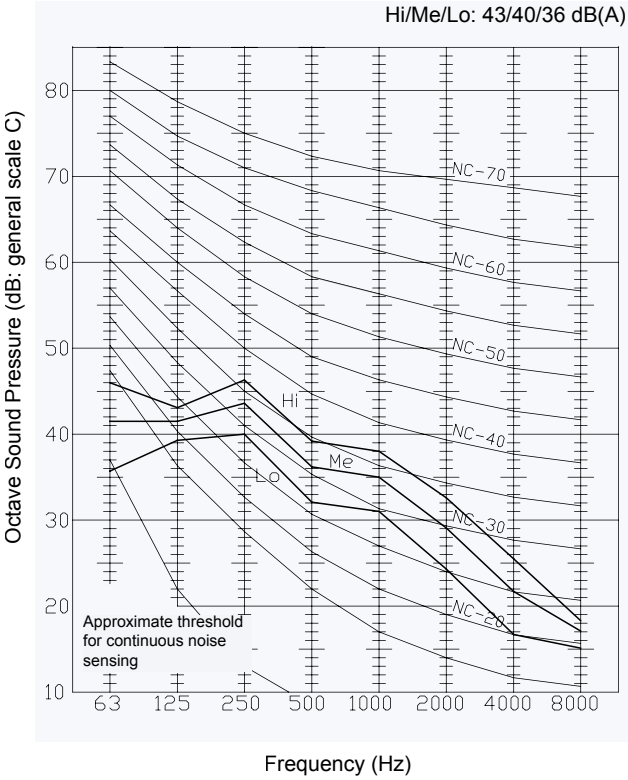

4.10.3. RPC – Ceiling Type

Model: RPC-2.0	Power source: 230 V 50 Hz
Measurement point:	1 meter below the unit 1 meter from the impulse louver
	Noise Criteria Curve

Hi/Me/Lo: 44/42/38 dB(A)

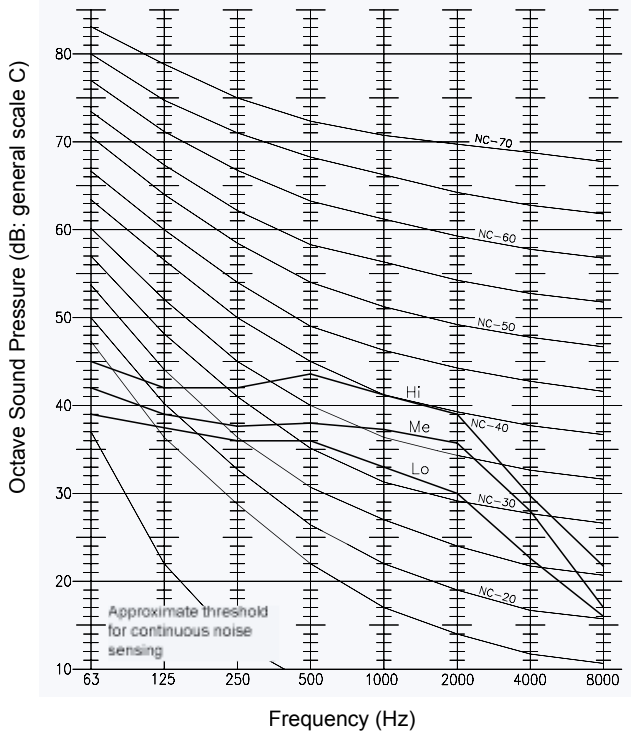

Model: RPC-2.5	Power source: 230 V 50 Hz
Measurement point:	1 meter below the unit 1 meter from the impulse louver
	Noise Criteria Curve

Hi/Me/Lo: 46/43/41 dB(A)

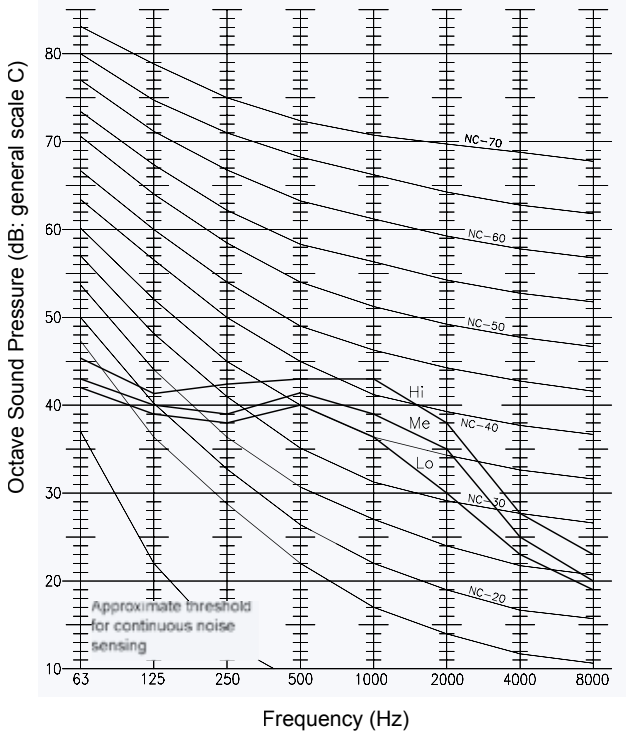

Model: RPC-3.0	Power source: 230 V 50 Hz
Measurement point:	1 meter below the unit 1 meter from the impulse louver
	Noise Criteria Curve

Hi/Me/Lo: 48/45/42 dB(A)

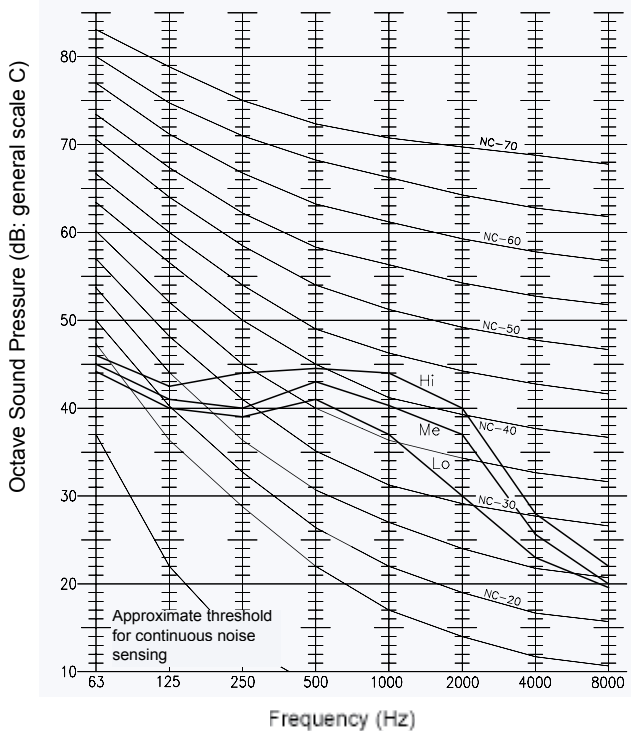

Model: RPC-3.5	Power source: 230 V 50 Hz
Measurement point:	1 meter below the unit 1 meter from the impulse louver
	Noise Criteria Curve

Hi/Me/Lo: 48/45/42 dB(A)

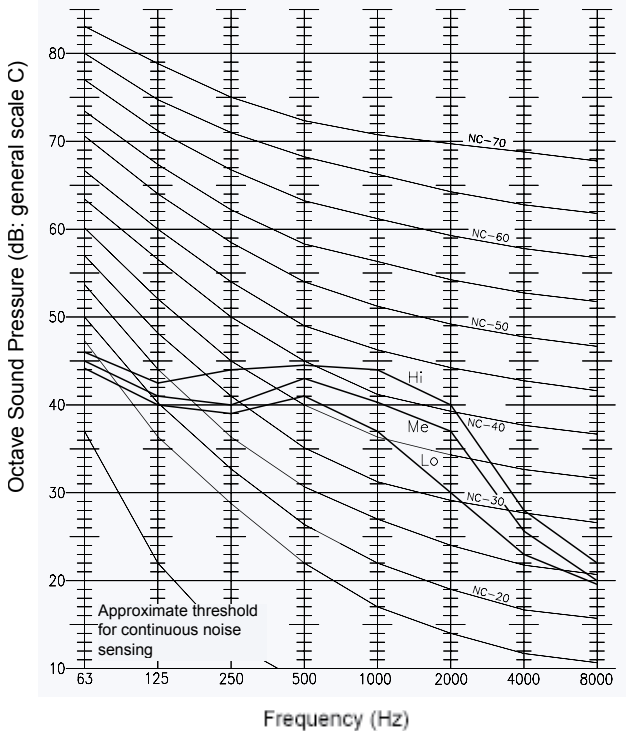

◆ RPC – Ceiling Type (Cont.)

Model: RPC-4.0	Power source: 230 V 50 Hz
Measurement point:	1 meter below the unit 1 meter from the impulse louver Noise Criteria Curve

Hi/Me/Lo: 49/45/39 dB(A)

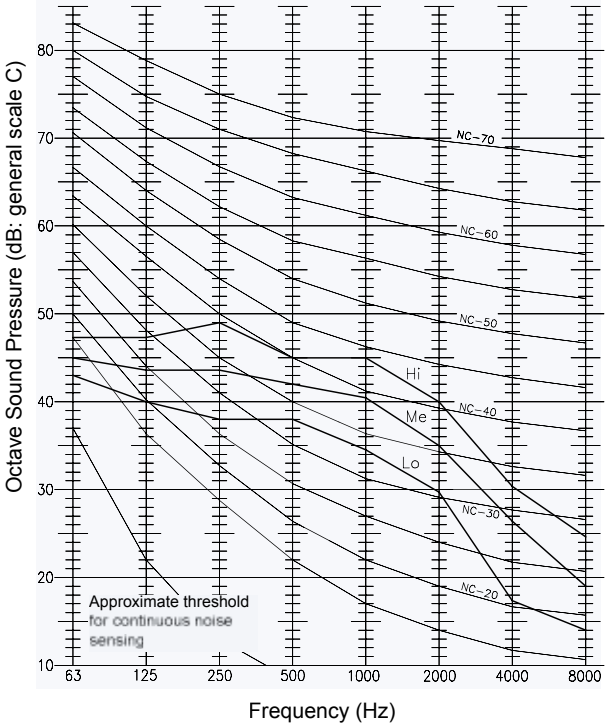

Model: RPC-5.0	Power source: 230 V 50 Hz
Measurement point:	1 meter below the unit 1 meter from the impulse louver Noise Criteria Curve

Hi/Me/Lo: 49/46/41 dB(A)

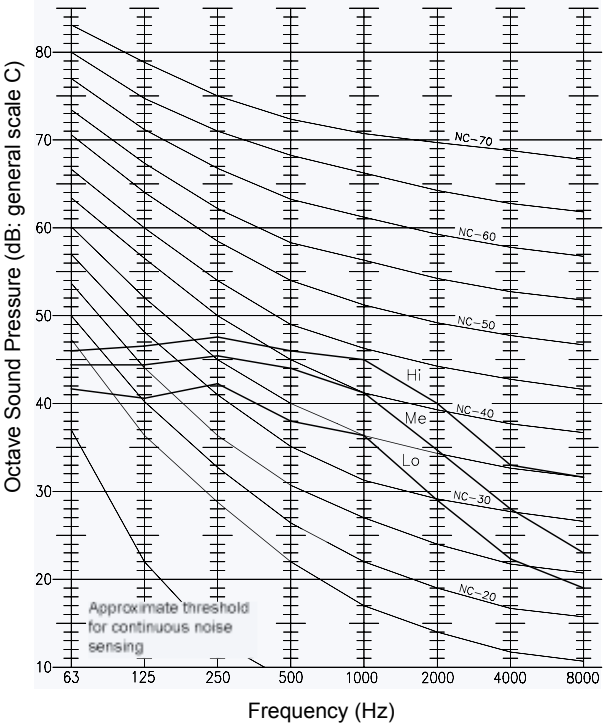

Model: RPC-6.0	Power source: 230 V 50 Hz
Measurement point:	1 meter below the unit 1 meter from the impulse louver Noise Criteria Curve

Hi/Me/Lo: 50/48/44 dB(A)

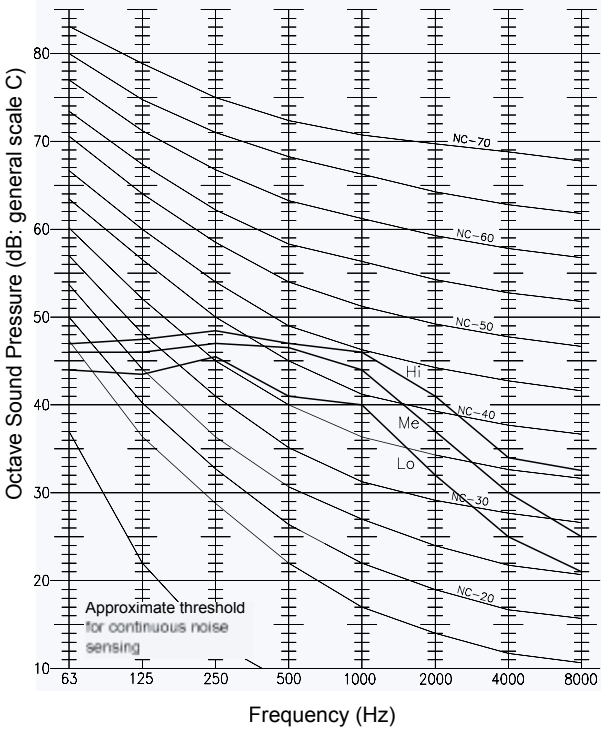

4.10.4. RPI – In-the-Ceiling Type

Model: RPI-0.8/1.0	Power source: 230 V 50 Hz
Measurement point:	1.5 meters below the unit
	Noise Criteria Curve
	Hi/Me/Lo: 37/35/35 dB(A)

Octave Sound Pressure (dB: general scale C)

TO BE INFORMED LATER

Approximate threshold for continuous noise sensing

Frequency (Hz)

Model: RPI-1.5	Power source: 230 V 50 Hz
Measurement point:	1.5 meters below the unit
	Noise Criteria Curve
	Hi/Me/Lo: 38/37/35 dB(A)

Octave Sound Pressure (dB: general scale C)

TO BE INFORMED LATER

Approximate threshold for continuous noise sensing

Frequency (Hz)

Model: RPI-2.0	Power source: 230 V 50 Hz
Measurement point:	1.5 meters below the unit
	Noise Criteria Curve
	Hi/Me/Lo: 32/30/28 dB(A)

Octave Sound Pressure (dB: general scale C)

TO BE INFORMED LATER

Approximate threshold for continuous noise sensing

Frequency (Hz)

Model: RPI-2.5	Power source: 230 V 50 Hz
Measurement point:	1.5 meters below the unit
	Noise Criteria Curve
	Hi/Me/Lo: 32/30/28 dB(A)

Octave Sound Pressure (dB: general scale C)

TO BE INFORMED LATER

Approximate threshold for continuous noise sensing

Frequency (Hz)

◆ **RPI – In-the-Ceiling Type (Cont.)**

Model: RPI-3.0/3.5	Power source: 230 V 50 Hz
Measurement point:	1.5 meters below the unit
	Noise Criteria Curve
	Hi/Me/Lo: 40/38/35 dB(A)

Octave Sound Pressure (dB: general scale C)

TO BE INFORMED LATER

Approximate threshold for continuous noise sensing

Frequency (Hz)

Model: RPI-4.0	Power source: 230 V 50 Hz
Measurement point:	1.5 meters below the unit
	Noise Criteria Curve
	Hi/Me/Lo: 42/41/37 dB(A)

Octave Sound Pressure (dB: general scale C)

TO BE INFORMED LATER

Approximate threshold for continuous noise sensing

Frequency (Hz)

Model: RPI-5.0	Power source: 230 V 50 Hz
Measurement point:	1.5 meters below the unit
	Noise Criteria Curve
	Hi/Me/Lo: 45/44/43 dB(A)

Octave Sound Pressure (dB: general scale C)

TO BE INFORMED LATER

Frequency (Hz)

Model: RPI-6.0	Power source: 230 V 50 Hz
Measurement point:	1.5 meters below the unit
	Noise Criteria Curve
	Hi/Me/Lo: 46/45/44 dB(A)

Octave Sound Pressure (dB: general scale C)

TO BE INFORMED LATER

Frequency (Hz)

◆ **RPI – In-the-Ceiling Type (Cont.)**

Model: RPI-8.0	Power source: 230 V 50 Hz
Measurement point:	1.5 meters below the unit
	Noise Criteria Curve

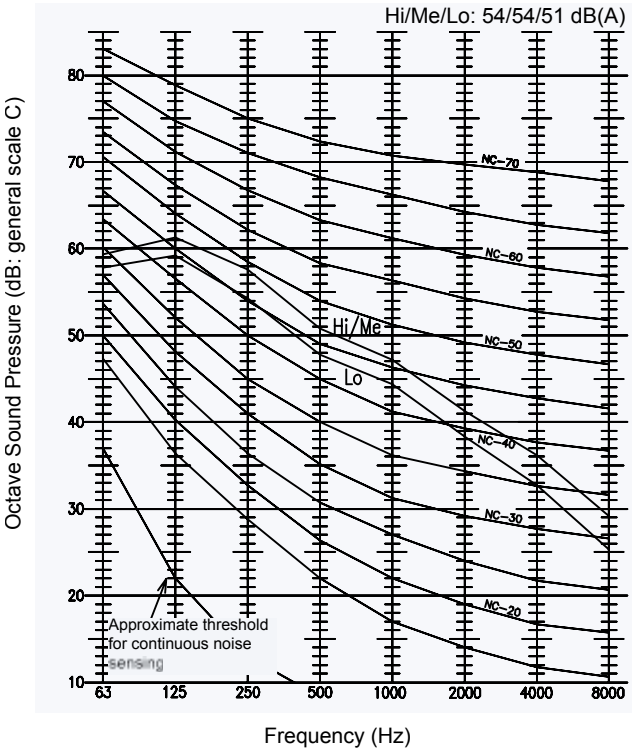

Model: RPI-10.0	Power source: 230 V 50 Hz
Measurement point:	1.5 meters below the unit
	Noise Criteria Curve

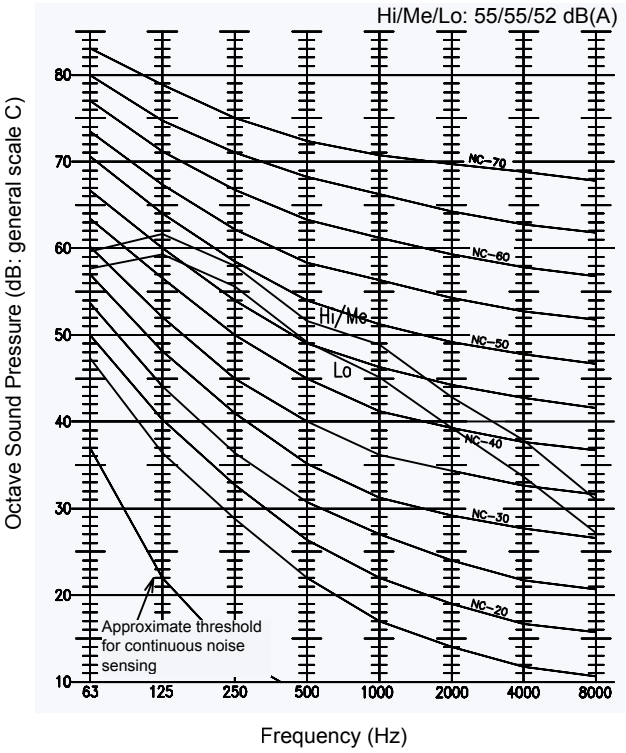

4

4.10.5. RPK – Wall type

Model: RPK-0.8/1.0	Power source: 230 V 50 Hz
Measurement point:	1 meter below the unit 1 meter from the impulse louver
	Noise Criteria Curve

Hi/Me/Lo: 36/34/31 dB(A)

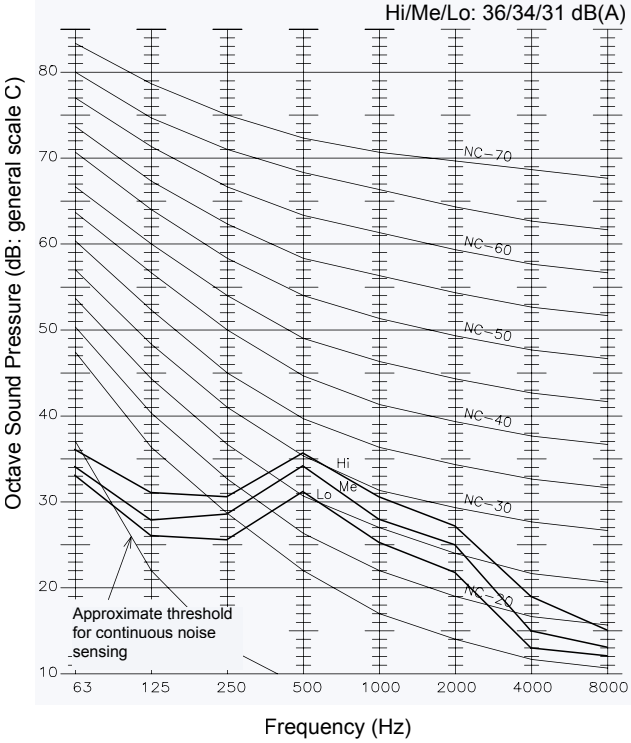

Model: RPK-1.5	Power source: 230 V 50 Hz
Measurement point:	1 meter below the unit 1 meter from the impulse louver
	Noise Criteria Curve

Hi/Me/Lo: 39/37/34 dB(A)

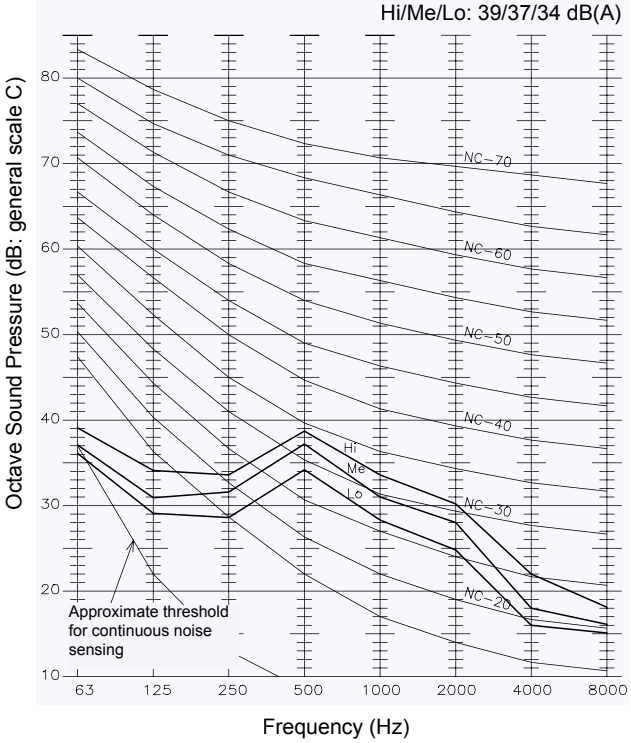

Model: RPK-2.0	Power source: 230 V 50 Hz
Measurement point:	1 meter below the unit 1 meter from the impulse louver
	Noise Criteria Curve

Hi/Me/Lo: 39/37/34 dB(A)

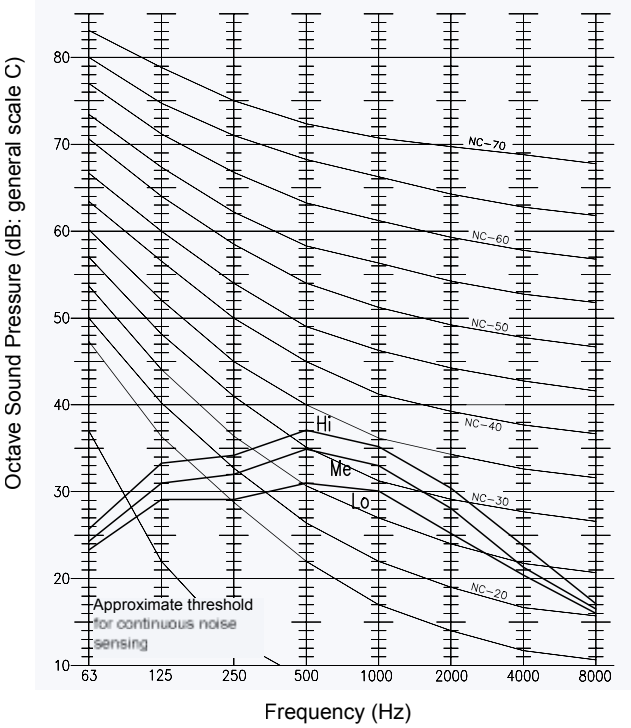

Model: RPK-2.5/3.0	Power source: 230 V 50 Hz
Measurement point:	1 meter below the unit 1 meter from the impulse louver
	Noise Criteria Curve

Hi/Me/Lo: 43/40/37 dB(A)

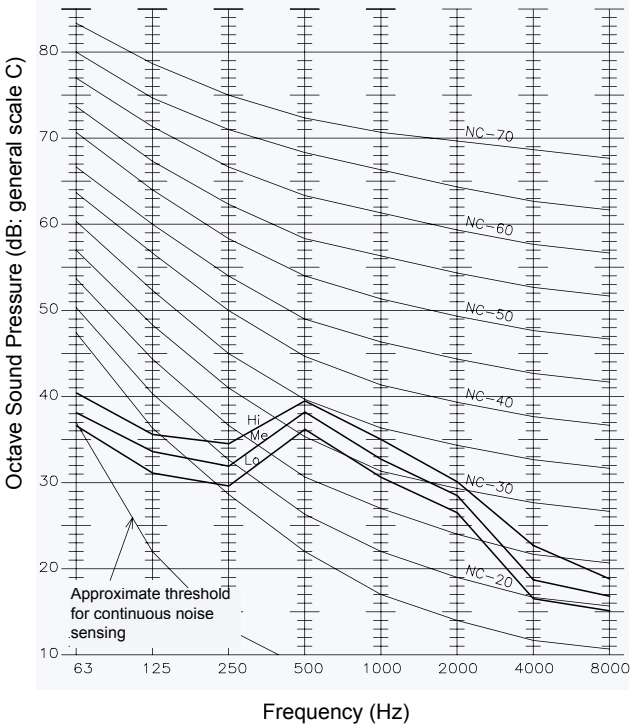

◆ **RPK - Wall type (cont)**

Model: RPK-3.5/4.0	Power source: 230 V 50 Hz
Measurement point:	1 meter below the unit 1 meter from the impulse louver Noise Criteria Curve

Hi/Me/Lo: 49/46/43 dB(A)

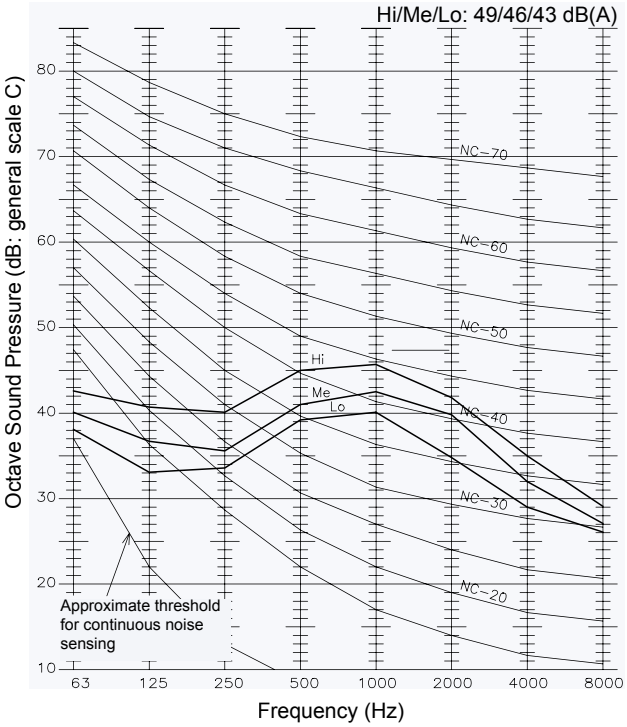

Model: RPK-1.0FSN1M	Power source: 230 V 50 Hz
Measurement point:	1 meter below the unit 1 meter from the impulse louver Noise Criteria Curve

Hi/Me/Lo: 38/36/34 dB(A)

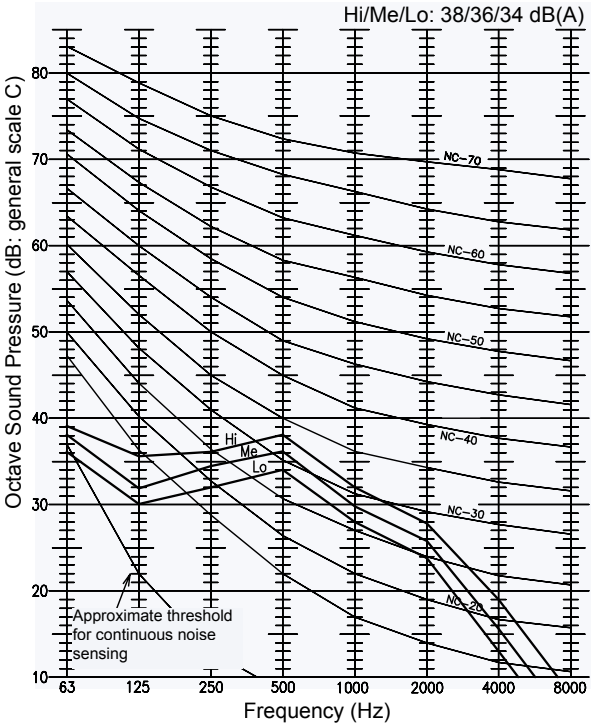

Model: RPK-1.5FSN1M	Power source: 230 V 50 Hz
Measurement point:	1 meter below the unit 1 meter from the impulse louver Noise Criteria Curve

Hi/Me/Lo: 40/38/36 dB(A)

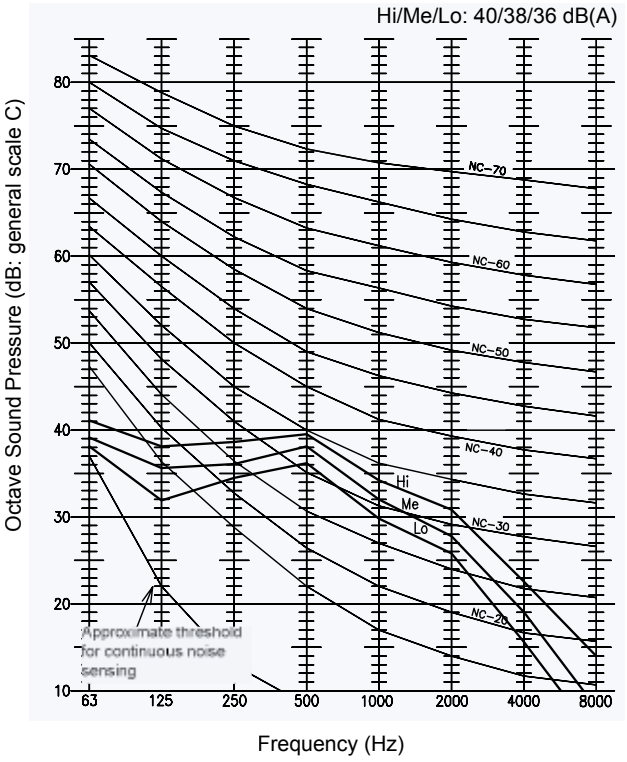

4

4.10.6. RPF – Floor Type

Model: RPF-1.0	Power source: 230 V 50 Hz
Measurement point:	1 meter from the floor level 1 meter from the front surface of the unit
	Noise Criteria Curve
	Hi/Me/Lo: 35/32/29 dB(A)

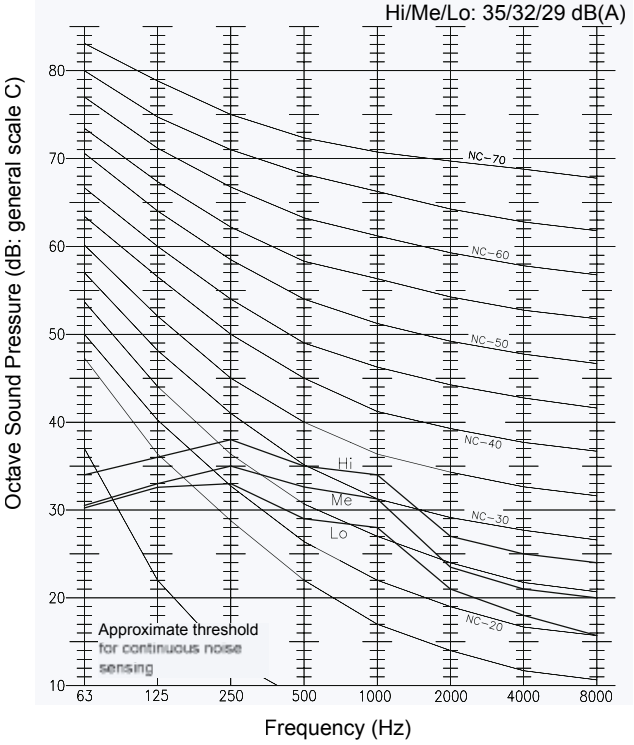

Model: RPF-1.5	Power source: 230 V 50 Hz
Measurement point:	1 meter from the floor level 1 meter from the front surface of the unit
	Noise Criteria Curve
	Hi/Me/Lo: 38/35/31 dB(A)

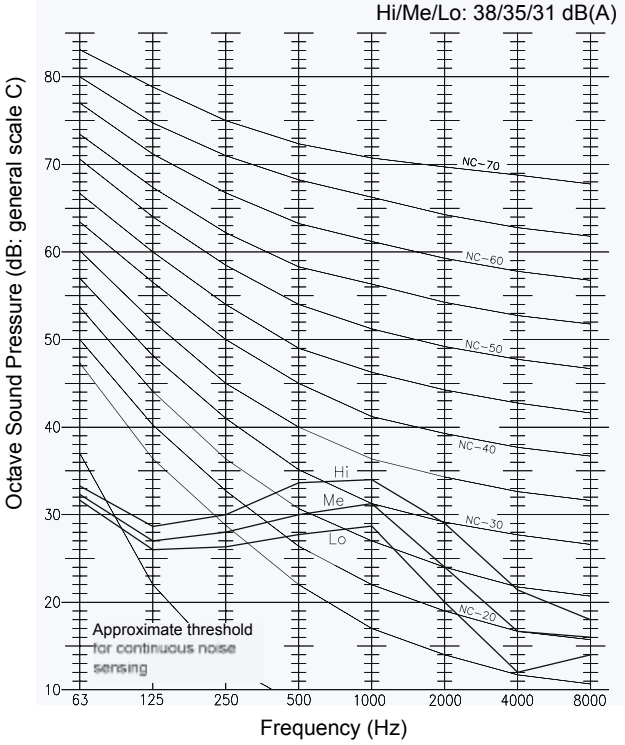

Model: RPF-2.0	Power source: 230 V 50 Hz
Measurement point:	1 meter from the floor level 1 meter from the front surface of the unit
	Noise Criteria Curve
	Hi/Me/Lo: 39/36/32 dB(A)

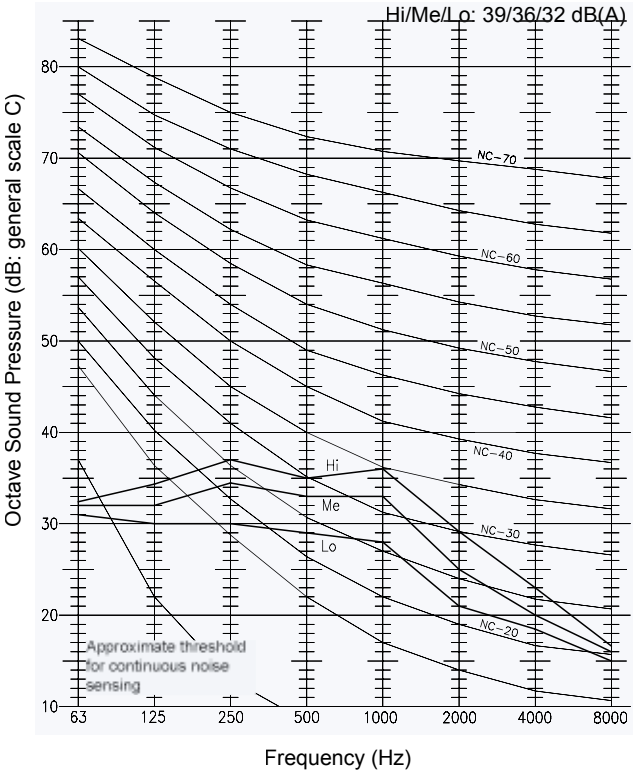

Model: RPF-2.5	Power source: 230 V 50 Hz
Measurement point:	1 meter from the floor level 1 meter from the front surface of the unit
	Noise Criteria Curve
	Hi/Me/Lo: 42/38/34 dB(A)

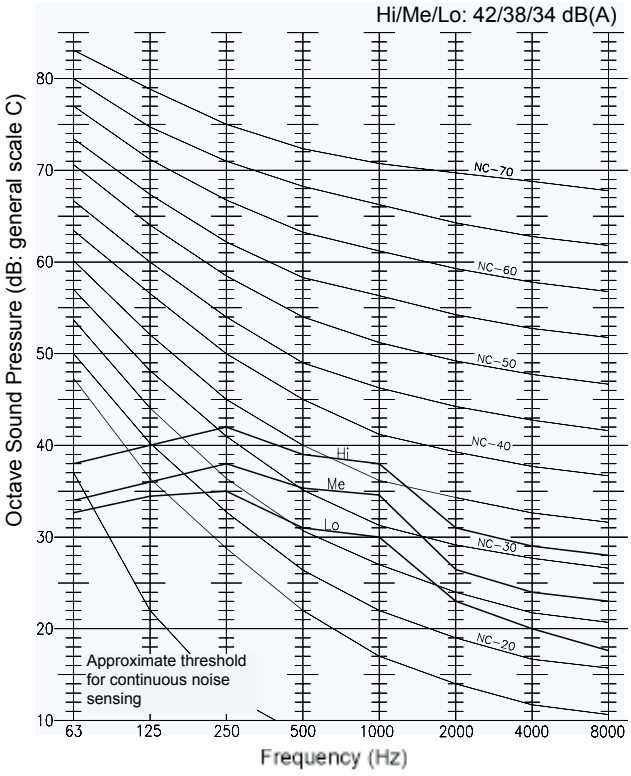

4.10.7. RPFI – Floor Concealed Type

Model: RPFI-1.0	Power source: 230 V 50 Hz

Measurement point: 1 meter from the floor level
1 meter from the front surface of the unit
Noise Criteria Curve

Hi/Me/Lo: 35/32/29 dB(A)

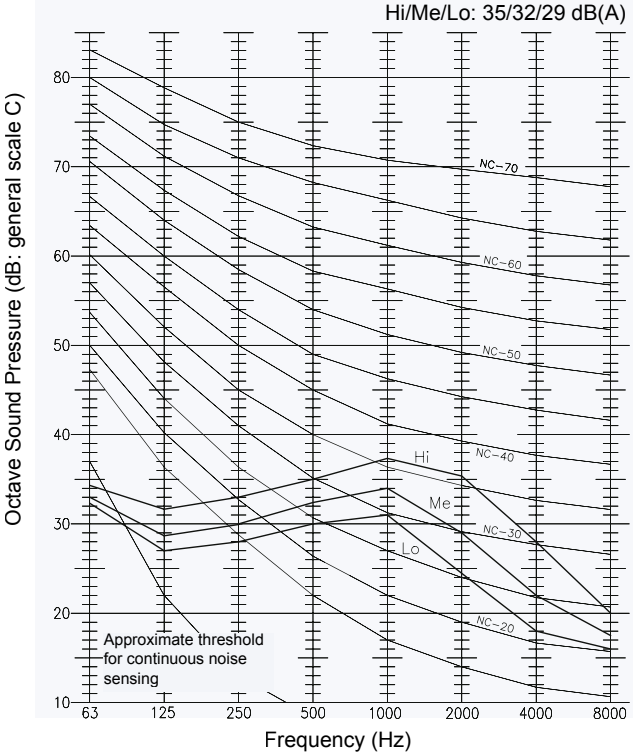

Model: RPFI-1.5	Power source: 230 V 50 Hz

Measurement point: 1 meter from the floor level
1 meter from the front surface of the unit
Noise Criteria Curve

Hi/Me/Lo: 38/35/31 dB(A)

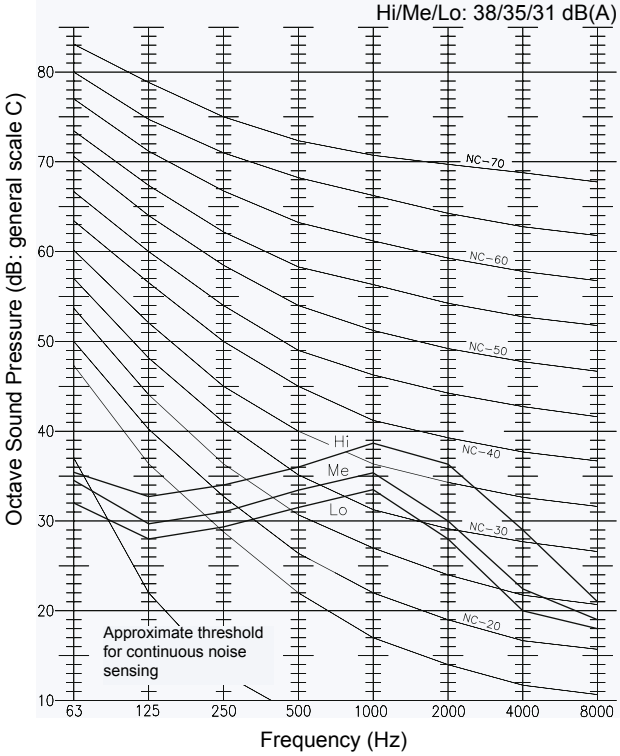

Model: RPFI-2.0	Power source: 230 V 50 Hz

Measurement point: 1 meter from the floor level
1 meter from the front surface of the unit
Noise Criteria Curve

Hi/Me/Lo: 39/36/32 dB(A)

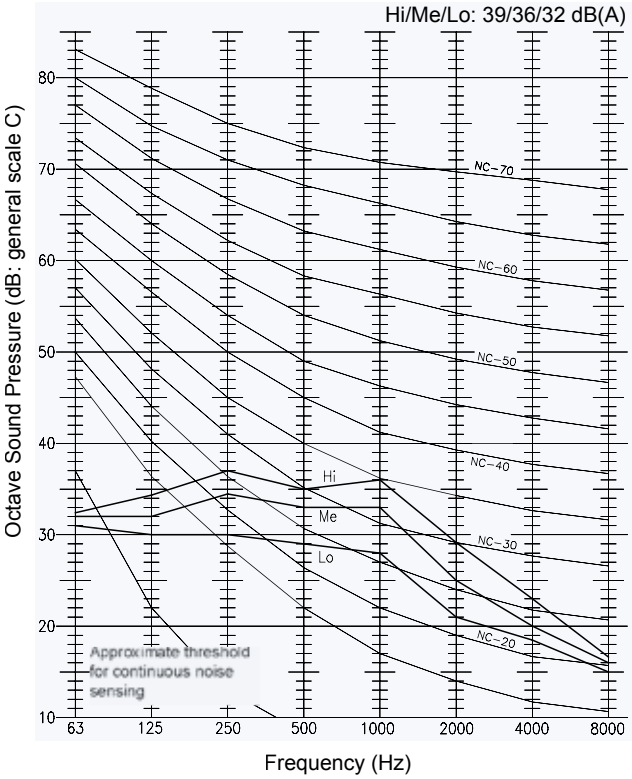

Model: RPFI-2.5	Power source: 230 V 50 Hz

Measurement point: 1 meter from the floor level
1 meter from the front surface of the unit
Noise Criteria Curve

Hi/Me/Lo: 42/38/34 dB(A)

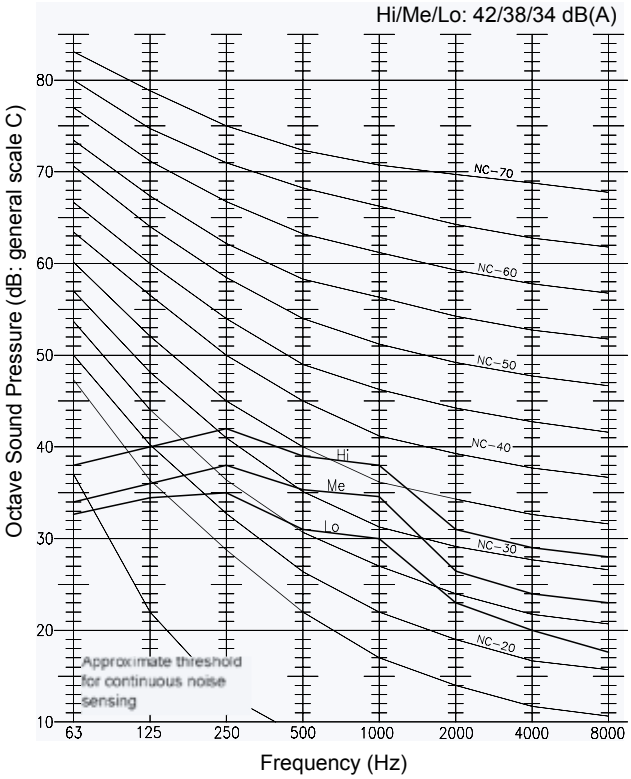

4.10.8. RAS – FSN(E) Outdoor Units

Model: RAS-5FSN	Power source: 400 V 50 Hz
Measurement point:	1 meter from the frontal surface of the unit 1.5 meters from floor level Noise Criteria Curve

Nominal/Night mode: 52/47 dB(A)

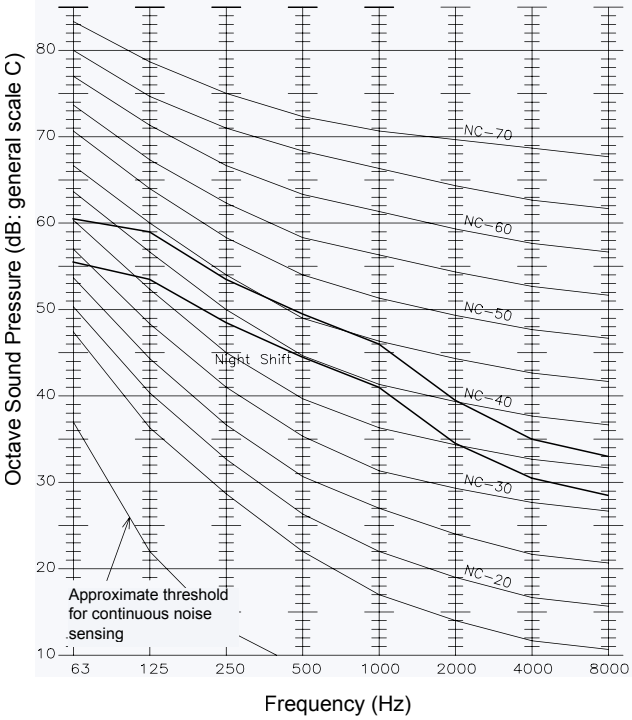

Model: RAS-8FSN(E)	Power source: 400 V 50 Hz
Measurement point:	1 meter from the frontal surface of the unit 1.5 meters from floor level Noise Criteria Curve

Nominal/Night mode: 56/51 dB(A)

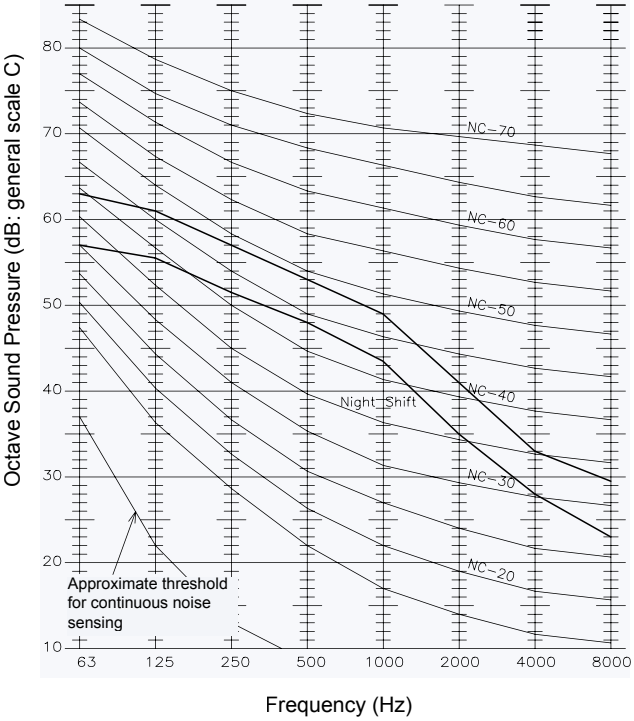

Model: RAS-10FSN(E)	Power source: 400 V 50 Hz
Measurement point:	1 meter from the frontal surface of the unit 1.5 meters from floor level Noise criteria curve

Nominal/Night mode: 58/53 dB(A)

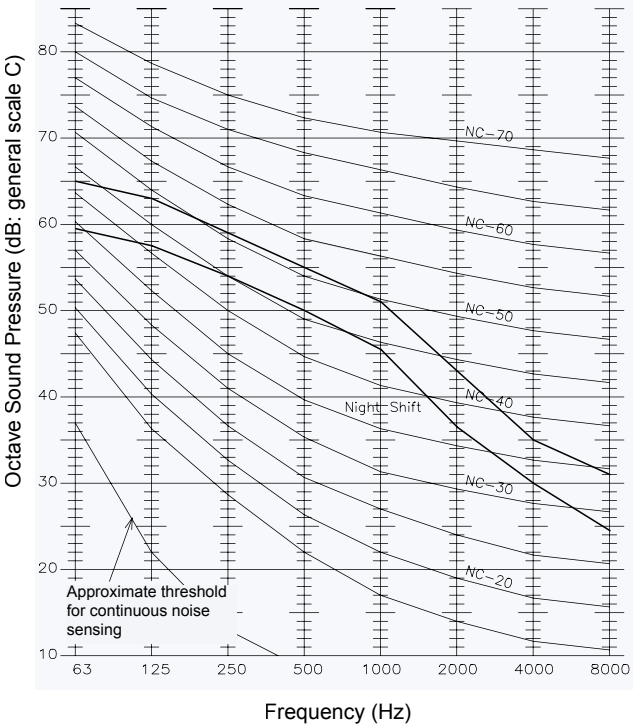

Model: RAS-12FSN(E)	Power source: 400 V 50 Hz
Measurement point:	1 meter from the frontal surface of the unit 1.5 meters from floor level Noise Criteria Curve

Nominal/Night mode: 60/55 dB(A)

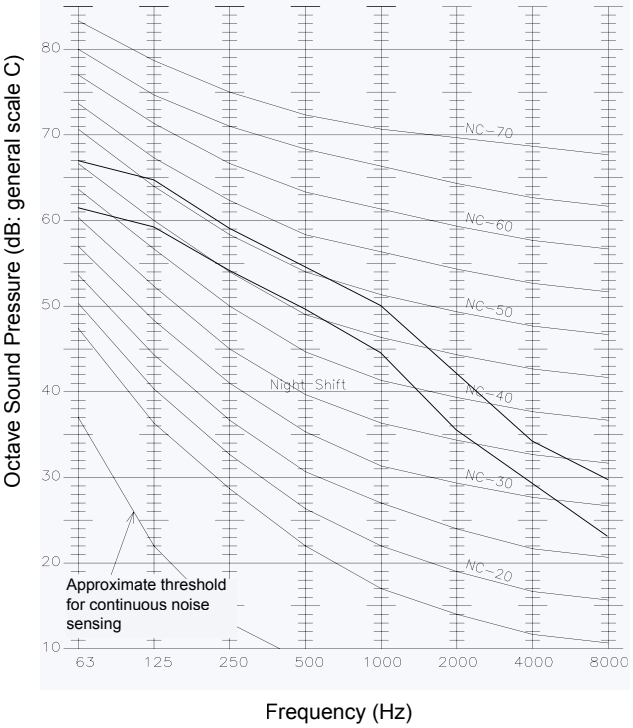

◆ RAS – FSN(E) Outdoor Units (cont.)

Model: RAS-14FSN	Power source: 400 V 50 Hz
Measurement point:	1 meter from the frontal surface of the unit 1.5 meters from floor level
	Noise Criteria Curve

Nominal/Night mode: 61/56 dB(A)

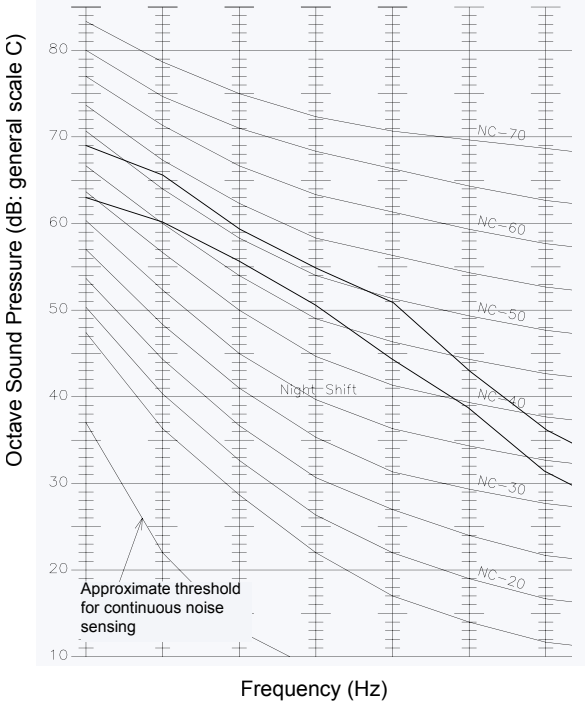

Modelo:RAS-16FSN	Power source: 400 V 50 Hz
Measurement point:	1 meter from the frontal surface of the unit 1.5 meters from floor level
	Noise Criteria Curve

Nominal/Night mode: 62/57 dB(A)

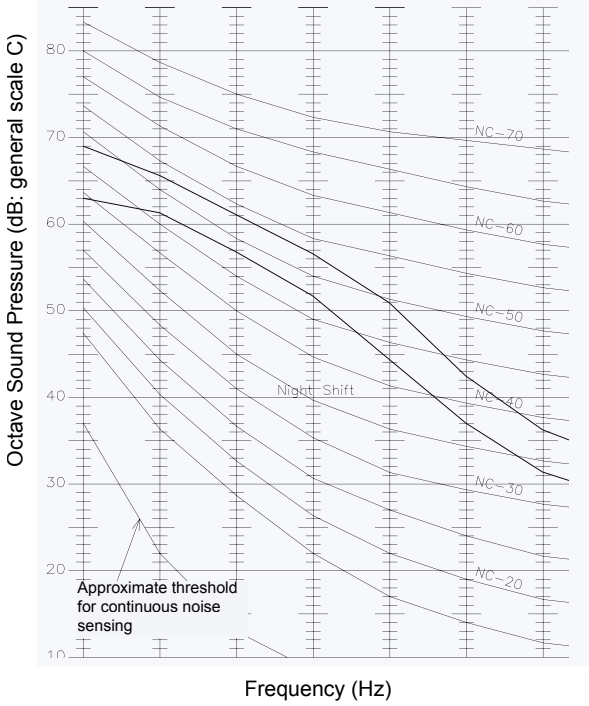

Model: RAS-18FSN	Power source: 400 V 50 Hz
Measurement point:	1 meter from the frontal surface of the unit 1.5 meters from floor level
	Noise Criteria Curve

Nominal/Night mode: 62/57 dB(A)

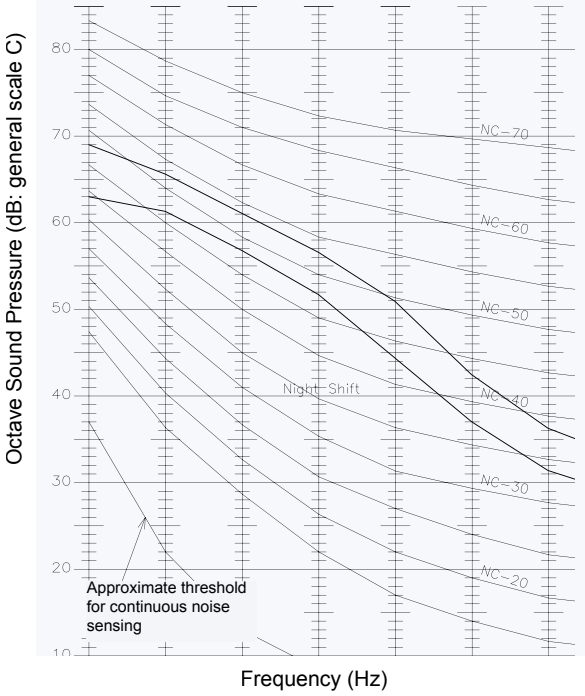

4

◆ RAS – FSN(E) Outdoor Units (cont.)

Model: RAS-20FSN	Power source: 400 V 50 Hz
Measurement point:	1 meter from the frontal surface of the unit 1.5 meters from floor level
	Noise Criteria Curve

Nominal/Night mode: 62/57 dB(A)

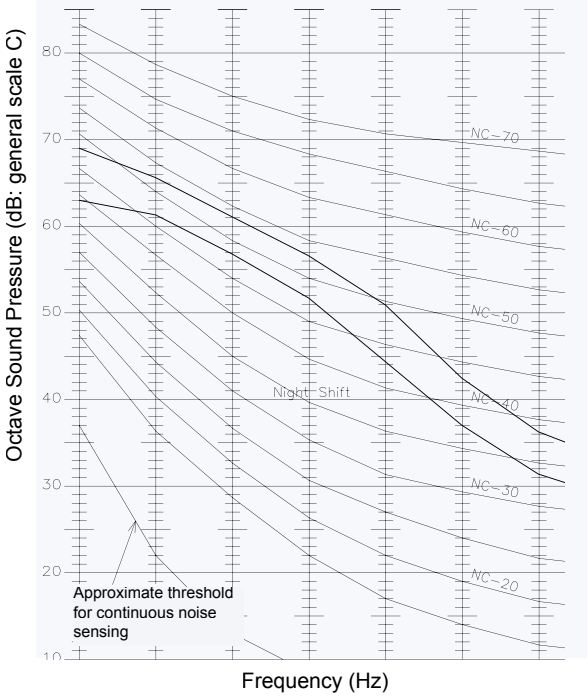

Modelo:RAS-22FSN	Power source: 400 V 50 Hz
Measurement point:	1 meter from the frontal surface of the unit 1.5 meters from floor level
	Noise Criteria Curve

Nominal/Night mode: 63/58 dB(A)

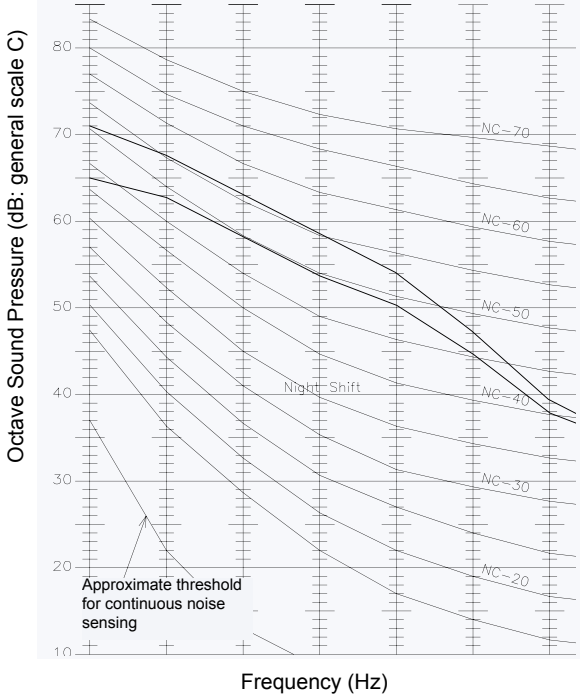

Model: RAS-24FSN	Power source: 400 V 50 Hz
Measurement point:	1 meter from the frontal surface of the unit 1.5 meters from floor level
	Noise Criteria Curve

Nominal/Night mode: 62/57 dB(A)

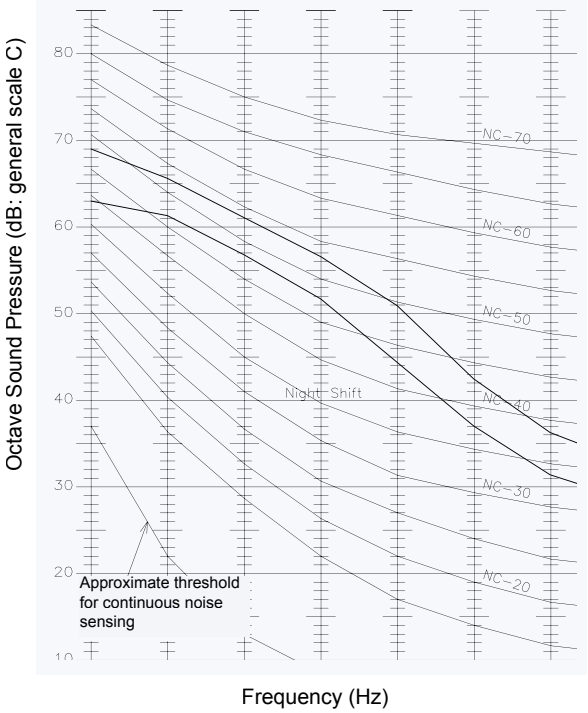

Model: RAS-26FSN	Power source: 400 V 50 Hz
Measurement point:	1 meter from the frontal surface of the unit 1.5 meters from floor level
	Noise Criteria Curve

Nominal/Night mode: 62/57 dB(A)

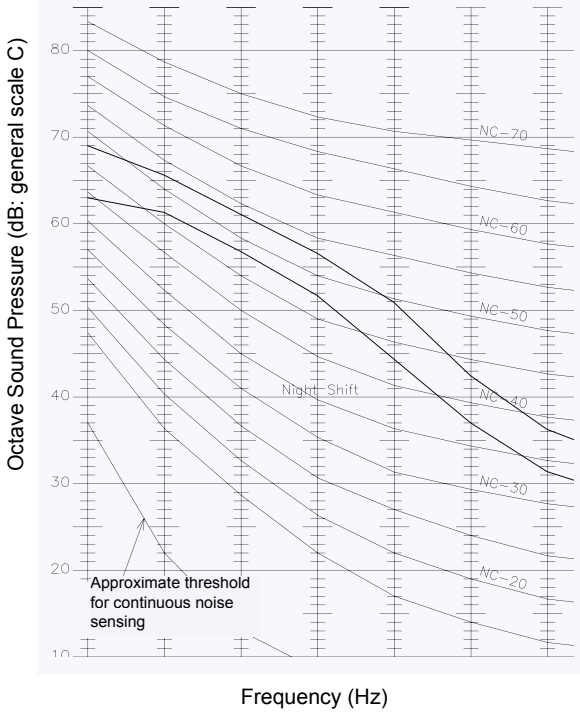

◆ **RAS – FSN(E) Outdoor Units (cont.)**

Model: RAS-28FSN	Power source: 400 V 50 Hz
Measurement point:	1 meter from the frontal surface of the unit 1.5 meters from floor level
	Noise Criteria Curve
	Nominal/Night mode: 63/58 dB(A)

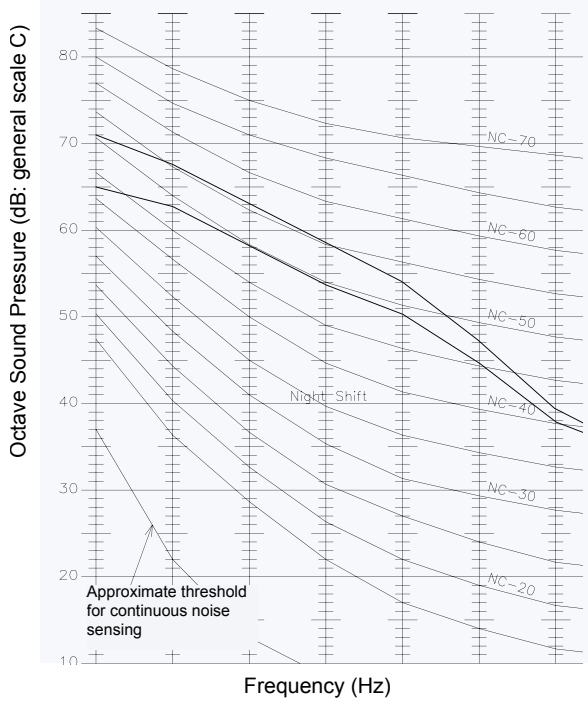

Modelo:RAS-30FSN	Power source: 400 V 50 Hz
Measurement point:	1 meter from the frontal surface of the unit 1.5 meters from floor level
	Noise Criteria Curve
	Nominal/Night mode: 63/58 dB(A)

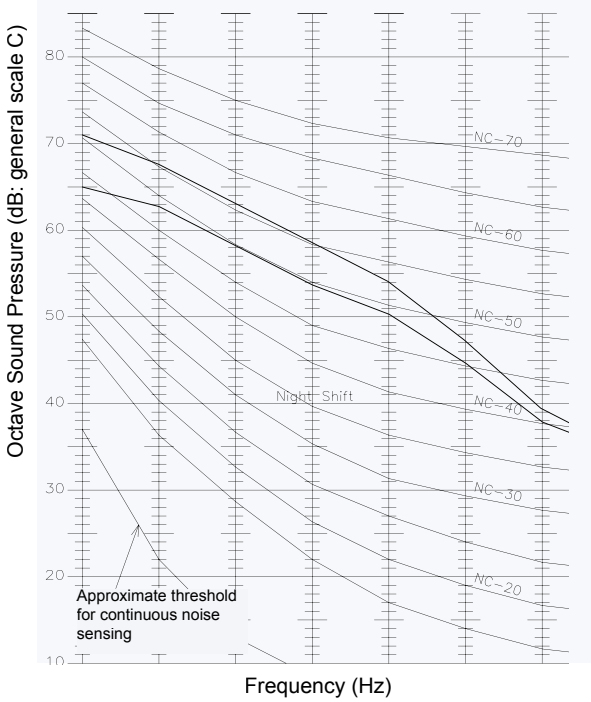

Model: RAS-32FSN	Power source: 400 V 50 Hz
Measurement point:	1 meter from the frontal surface of the unit 1.5 meters from floor level
	Noise Criteria Curve
	Nominal/Night mode: 63/58 dB(A)

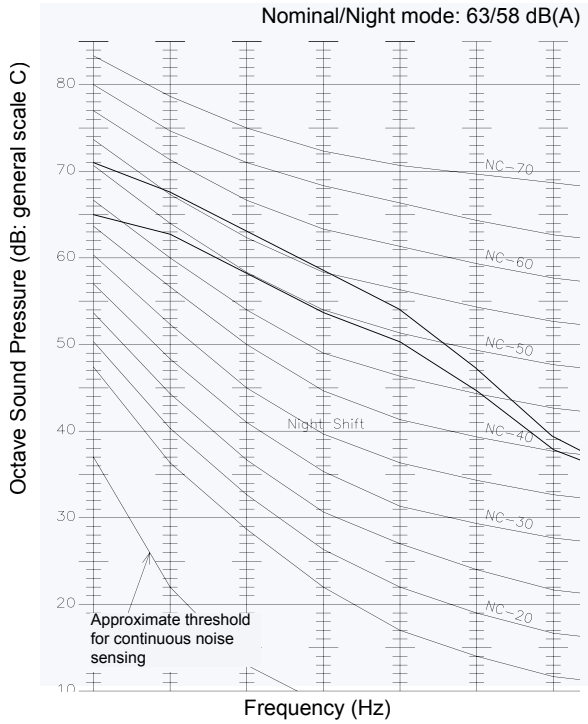

4

4.10.9. RAS – FXN(E) Outdoor Units

Model: RAS-8FXN(E)	Power source: 400 V 50 Hz
Measurement point:	1 meter from the frontal surface of the unit 1.5 meters from floor level
	Noise Criteria Curve

Nominal/Night mode: 56/51 dB(A)

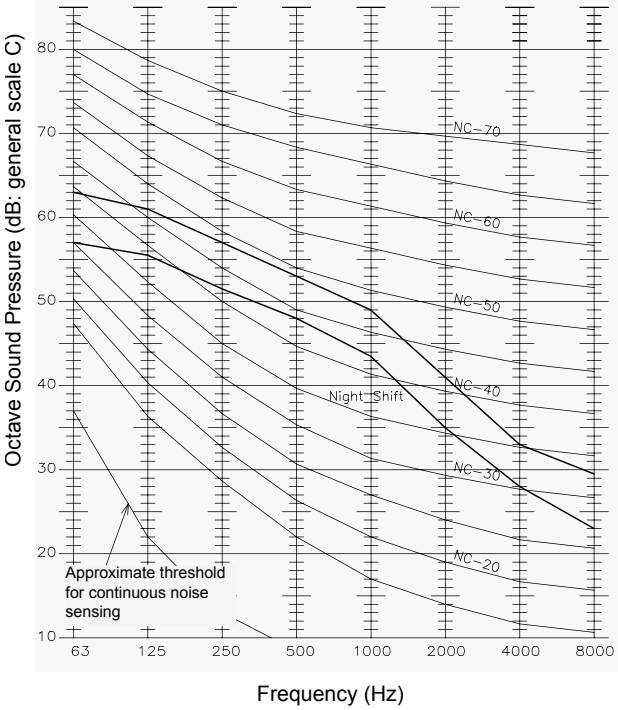

Model: RAS-10FXN(E)	Power source: 400 V 50 Hz
Measurement point:	1 meter from the frontal surface of the unit 1.5 meters from floor level
	Noise Criteria Curve

Nominal/Night mode: 58/53 dB(A)

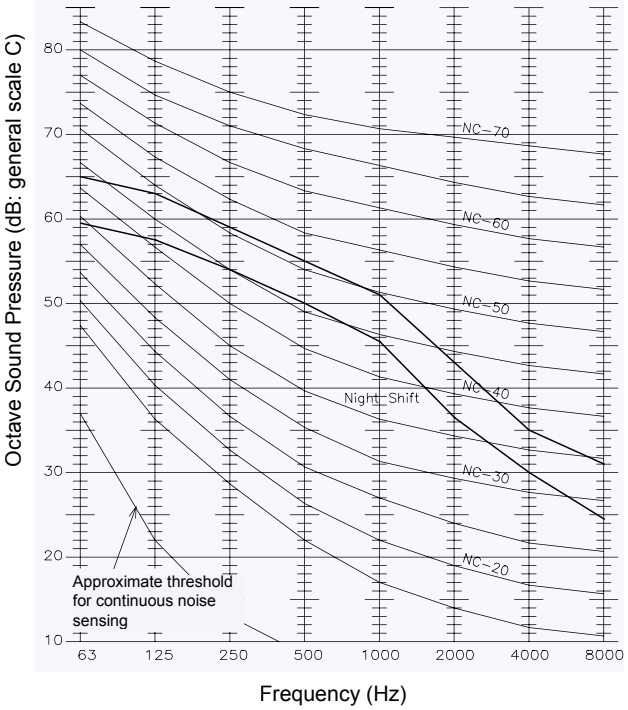

Model: RAS-12FXN(E)	Power source: 400 V 50 Hz
Measurement point:	1 meter from the frontal surface of the unit 1.5 meters from floor level
	Noise Criteria Curve

Nominal/Night mode: 58/53 dB(A)

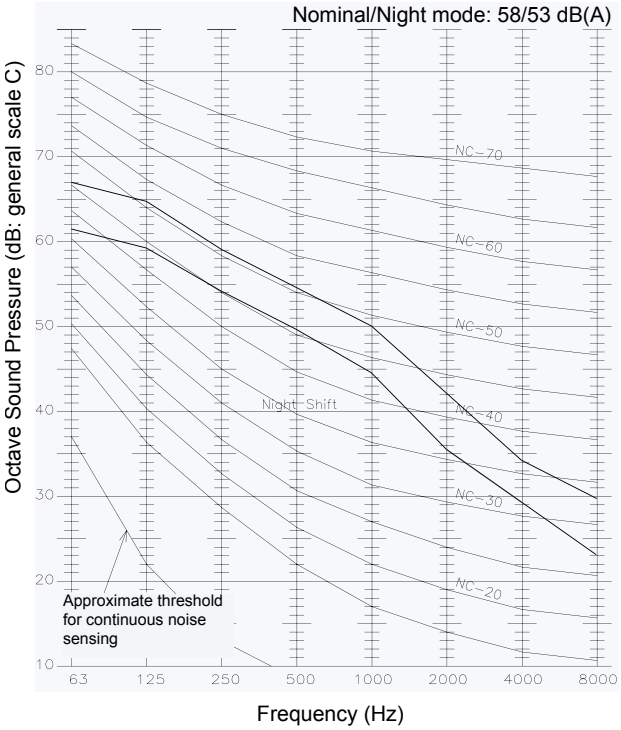

Modelo:RAS-16FXN(E)	Power source: 400 V 50 Hz
Measurement point:	1 meter from the frontal surface of the unit 1.5 meters from floor level
	Noise Criteria Curve

Nominal/Night mode: 62/57 dB(A)

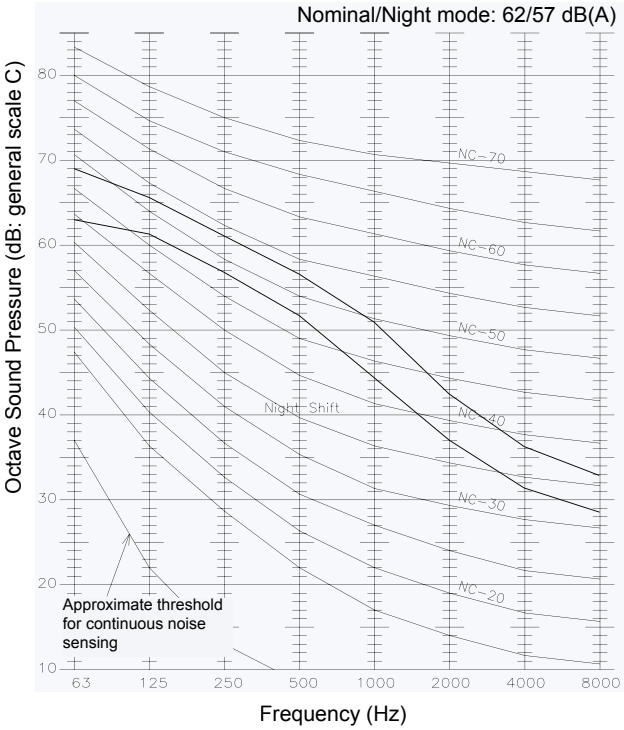

◆ RAS – FXN(E) Outdoor Units (cont.)

Model: RAS-18FXN	Power source: 400 V 50 Hz
Measurement point:	1 meter from the frontal surface of the unit 1.5 meters from floor level Noise Criteria Curve

Nominal/Night mode: 62/57 dB(A)

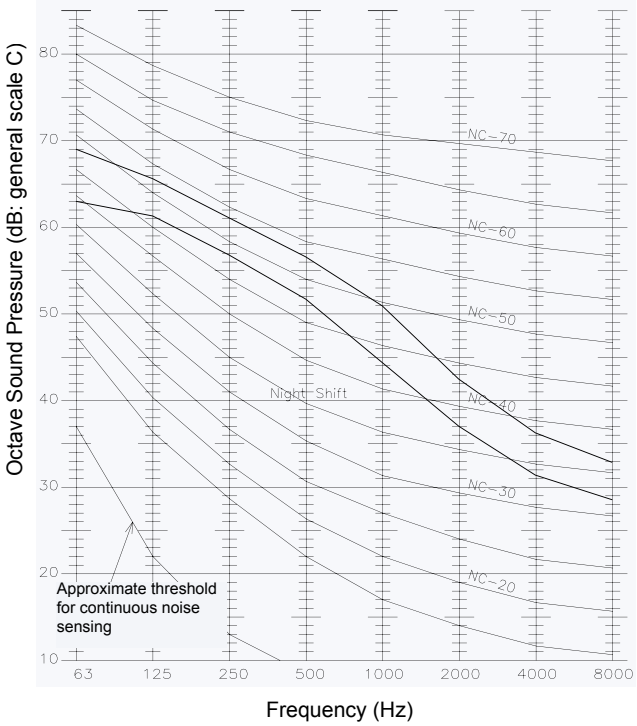

Modelo:RAS-20FXN	Power source: 400 V 50 Hz
Measurement point:	1 meter from the frontal surface of the unit 1.5 meters from floor level Noise Criteria Curve

Nominal/Night mode: 62/57 dB(A)

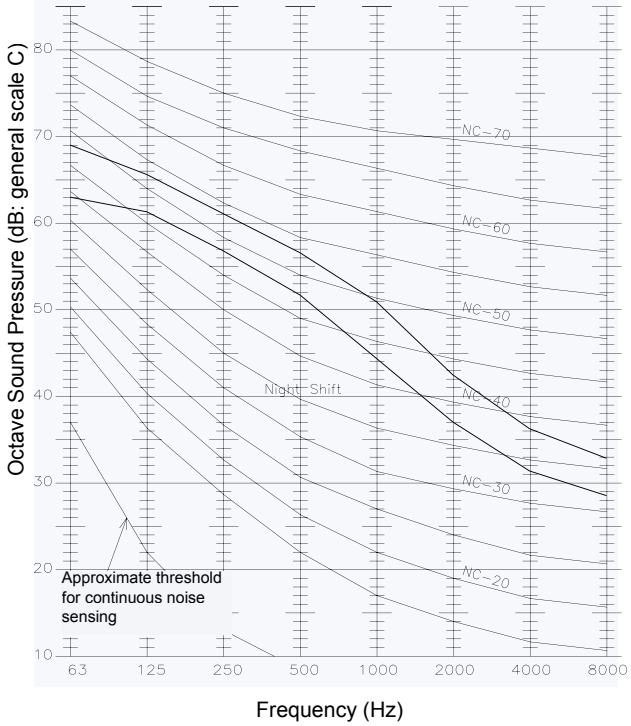

Model: RAS-22FXN	Power source: 400 V 50 Hz
Measurement point:	1 meter from the frontal surface of the unit 1.5 meters from floor level Noise Criteria Curve

Nominal/Night mode: 63/58 dB(A)

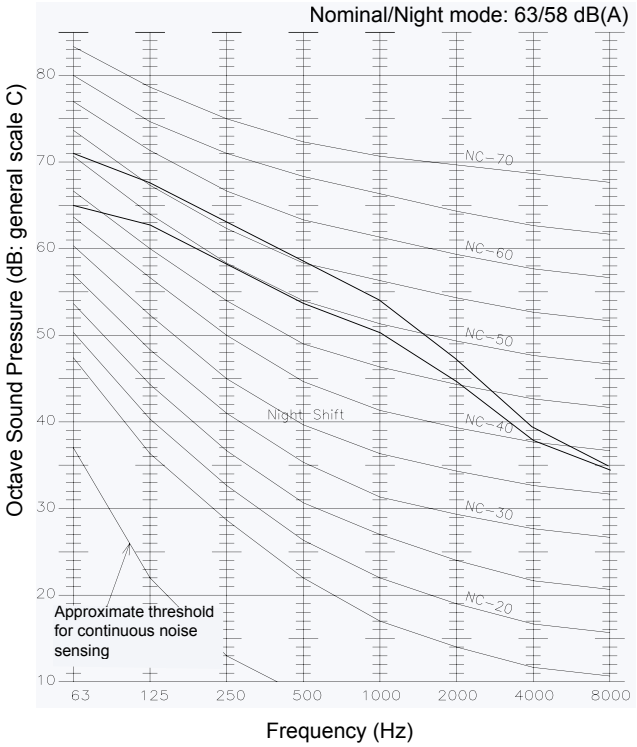

Model: RAS-24FXN	Power source: 400 V 50 Hz
Measurement point:	1 meter from the frontal surface of the unit 1.5 meters from floor level Noise Criteria Curve

Nominal/Night mode: 62/57 dB(A)

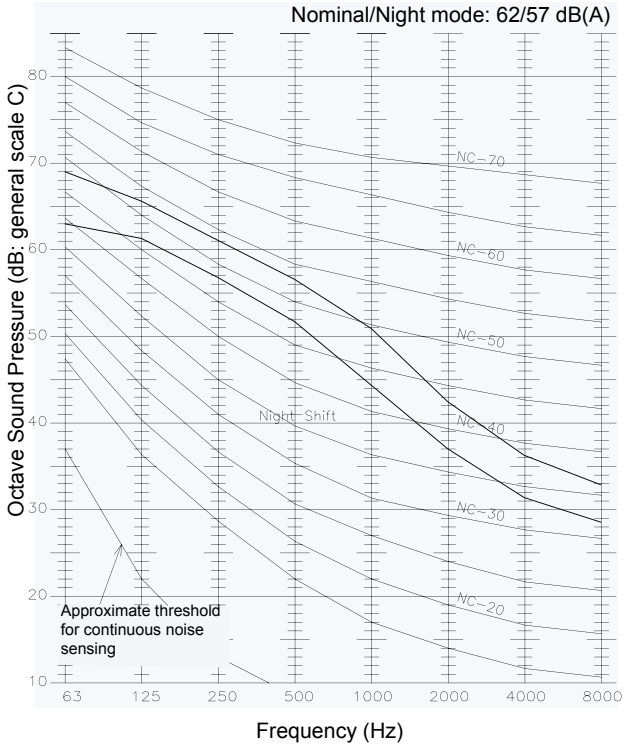

◆ RAS – FXN(E) Outdoor Units (cont.)

Model: RAS-26FXN	Power source: 400 V 50 Hz
Measurement point:	1 meter from the frontal surface of the unit 1.5 meters from floor level

Noise Criteria Curve

Nominal/Night mode: 63/58 dB(A)

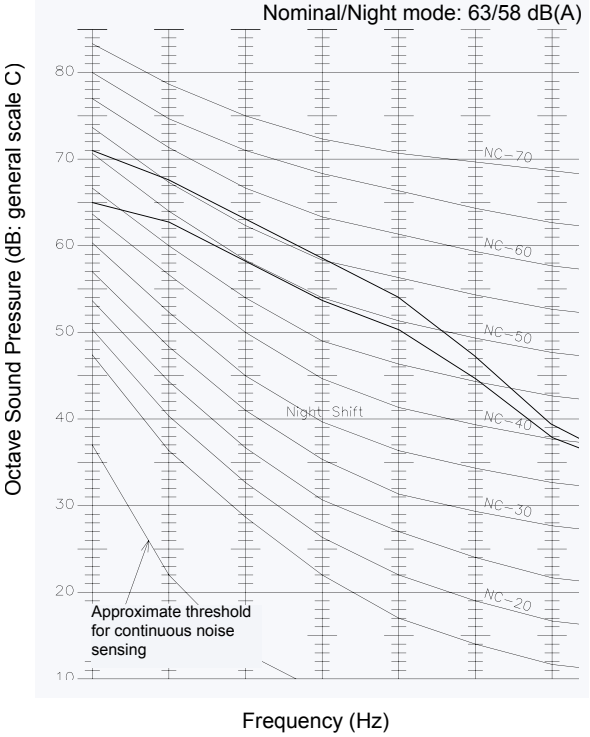

Modelo:RAS-30FXN	Power source: 400 V 50 Hz
Measurement point:	1 meter from the frontal surface of the unit 1.5 meters from floor level

Noise Criteria Curve

Nominal/Night mode: 63/58 dB(A)

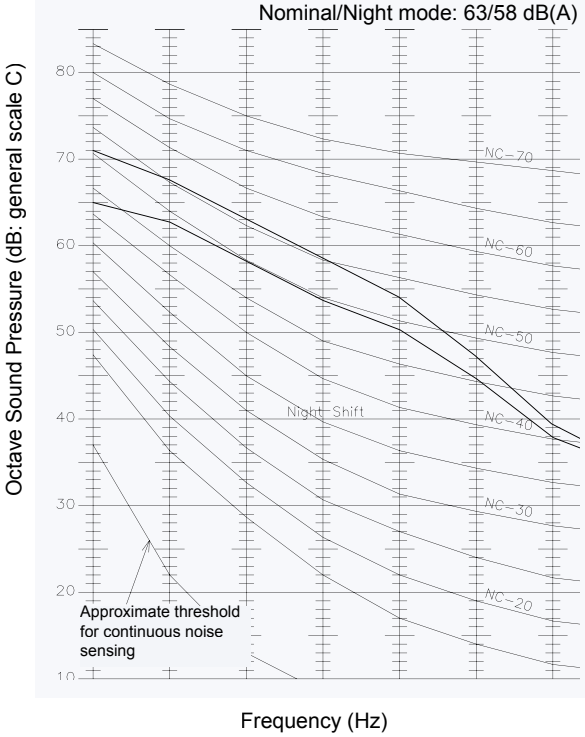

Model: RAS-32FXN	Power source: 400 V 50 Hz
Measurement point:	1 meter from the frontal surface of the unit 1.5 meters from floor level

Noise Criteria Curve

Nominal/Night mode: 63/58 dB(A)

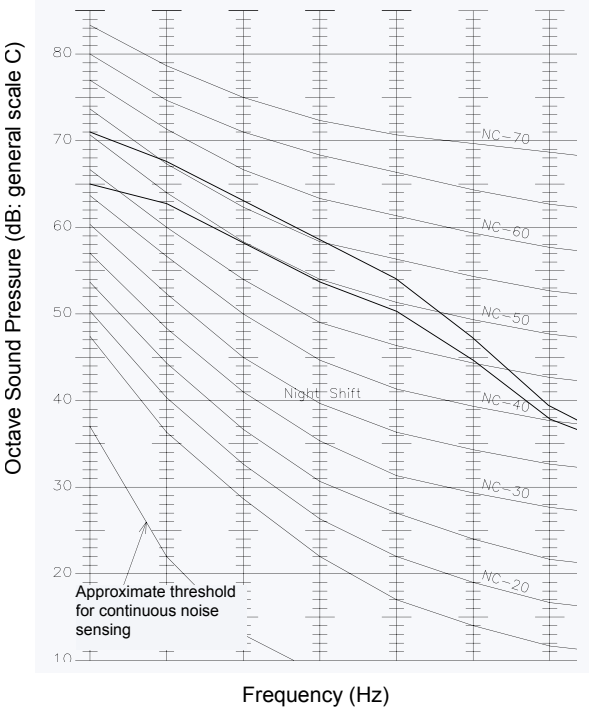

4.10.10. RAS – FSVNE Outdoor Units

Model: RAS-3FSVNE	Power source: 230 V 50 Hz
Measurement point:	1 meter from the frontal surface of the unit 1.5 meters from floor level
	Noise Criteria Curve

Nominal/Night mode: 45/41 dB(A)

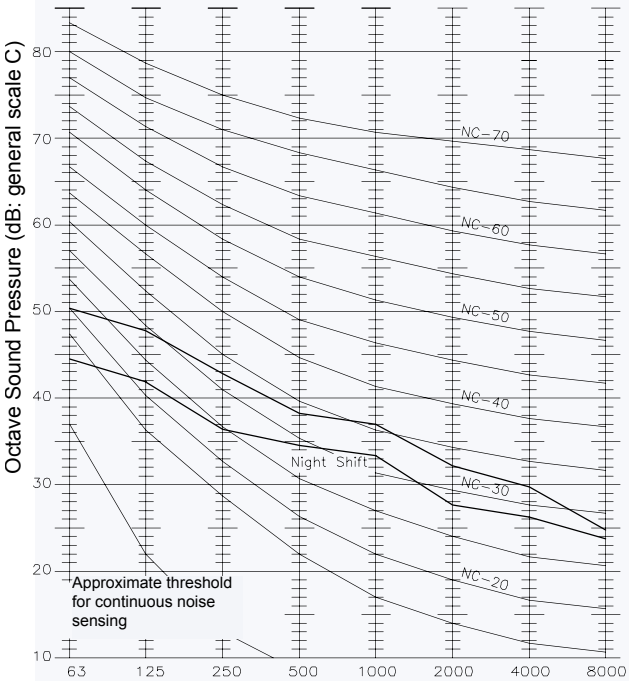

Modelo:RAS-4FSVNE	Power source: 400 V 50 Hz
Measurement point:	1 meter from the frontal surface of the unit 1.5 meters from floor level
	Noise Criteria Curve

Nominal/Night mode: 47/43 dB(A)

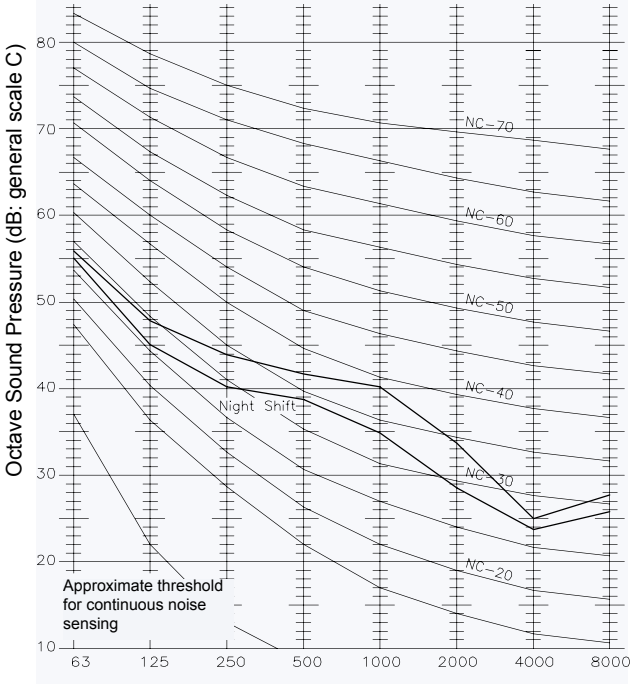

Model: RAS-5FSVNE	Power source: 400 V 50 Hz
Measurement point:	1 meter from the frontal surface of the unit 1.5 meters from floor level
	Noise Criteria Curve

Nominal/Night mode: 49/45 dB(A)

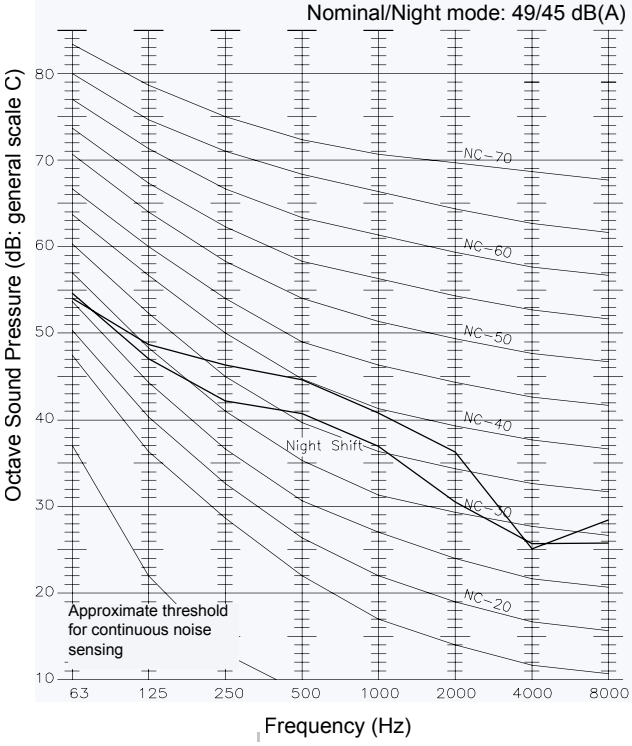

4

4.11. Foundation Provision

4.11.1. Foundation for Models FSN(E) and FXN(E)

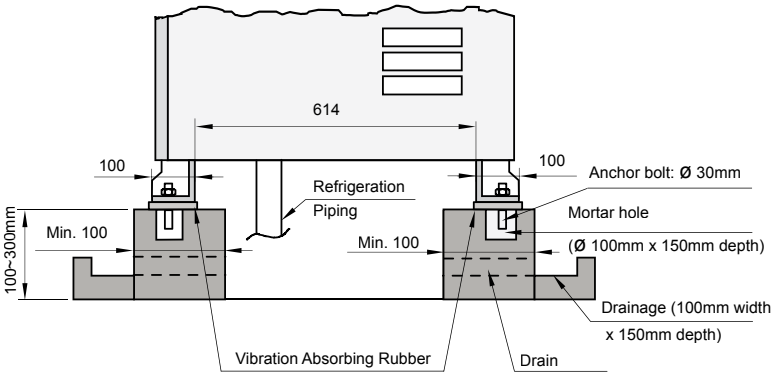

MODEL	A	B
RAS-5FSN	760	368
RAS-8FSN(E)/FXN(E)		688
RAS-10/12FSN(E)/FXN(E)		688
RAS-14/16FSN		948
RAS-16FXN		824
RAS-18~22FSN/FXN		
RAS-24~32FSN/FXN		723

(Units: Mm)

◆ **Position of anchor bolts**

RAS-5~16FSN(E) RAS-8~12FXN(E)	RAS-18~22FSN(E) RAS-16~22FXN(E)	RAS-24~32FSN(E) RAS-24~32FXN(E)

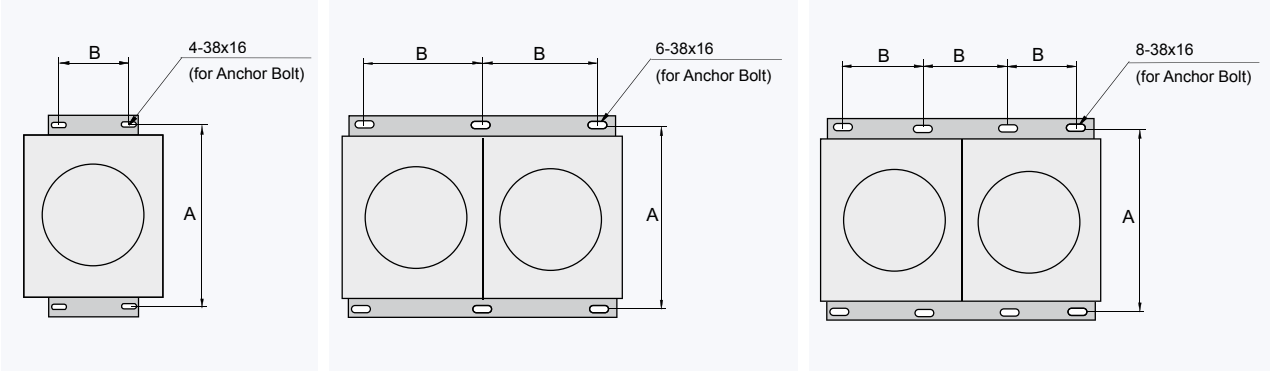

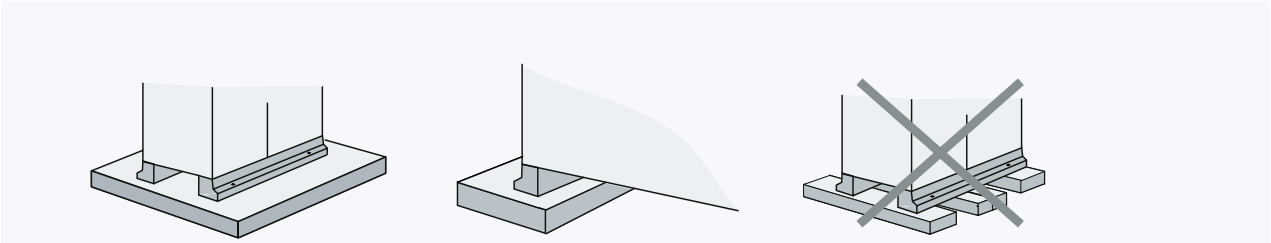

Correct foundation	Incorrect foundation

NOTE:

Design the foundation as show above and confirm that the foundation carries all of the feet of the unit.

4.11.2. Foundation for FSVNE Models

◆ **Concrete foundations**

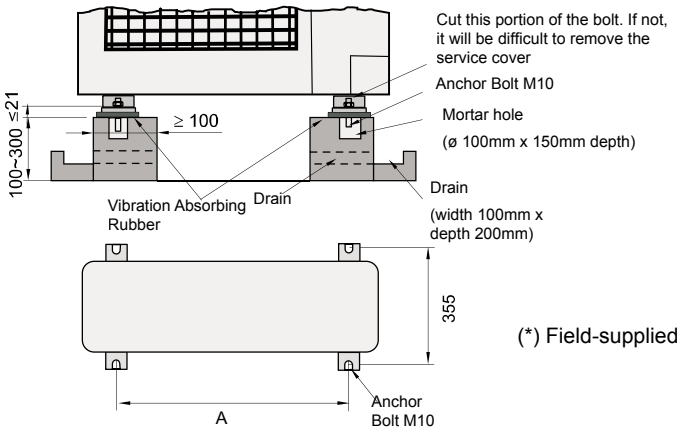

(*) Field-supplied

Fix Unit to the Wall	Suspended unit

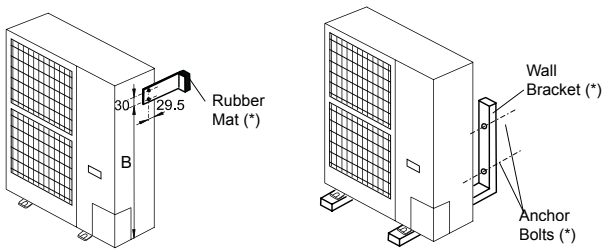

(Units: mm)

MODEL	A	B
RAS 3FSVNE	530	511
RAS4/5FSVNE	630	796

4

4.12. Center of Gravity

4.12.1. Center of Gravity for FSN(E)

Models: RAS-5FSN

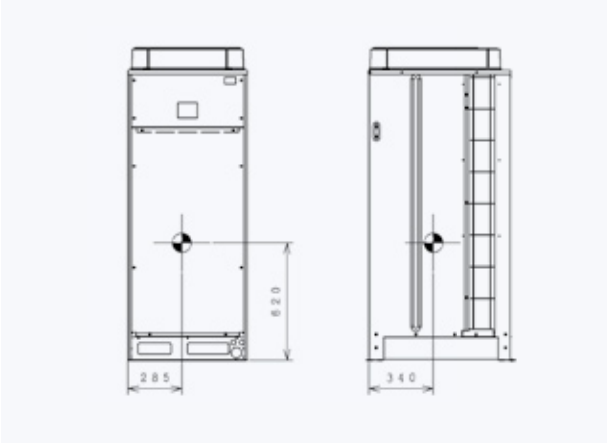

Models: RAS-8FSN(E)

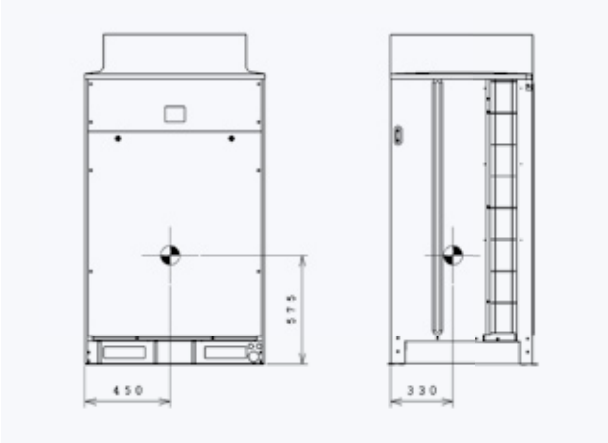

Models: RAS-10/12FSN(E)

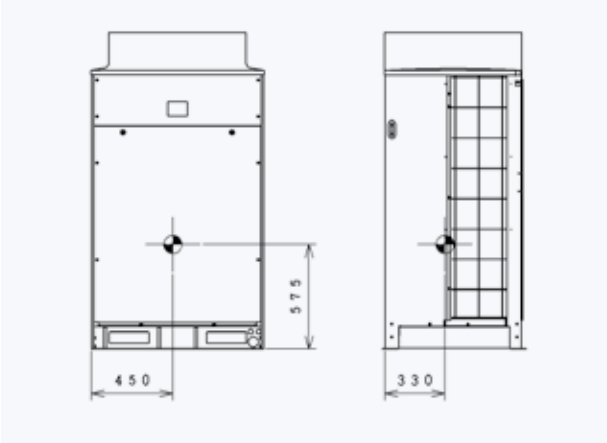

Models: RAS-14/16FSN

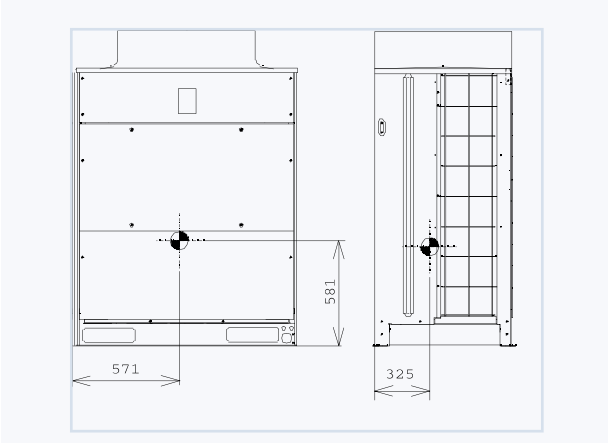

HITACHI
Inspire the Next

◆ Center of Gravity for FSN (Cont.)

Models: RAS-18FSN

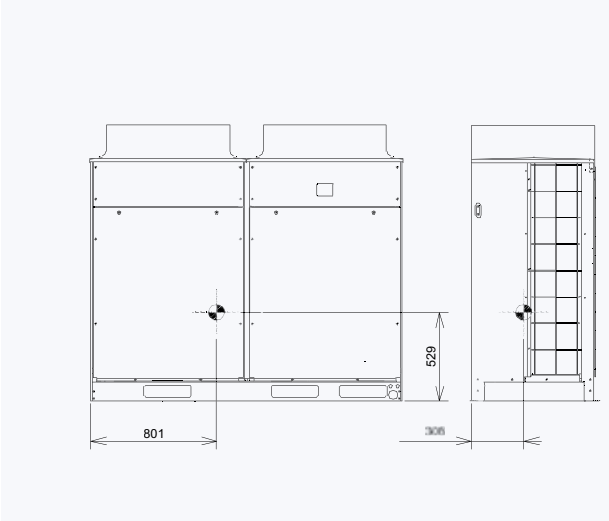

Models: RAS-20/22FSN

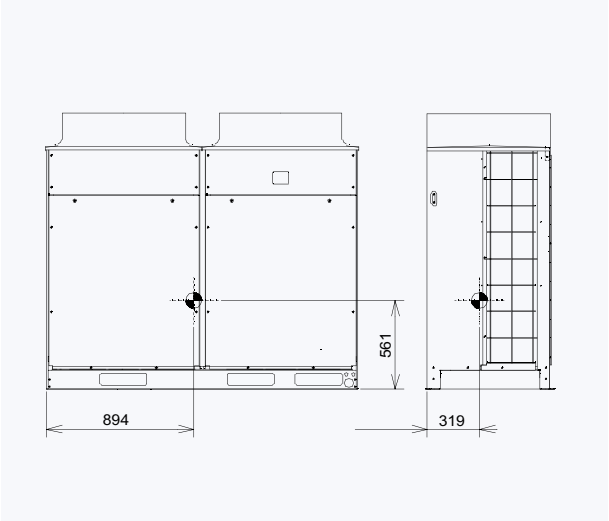

Models: RAS-24/26FSN

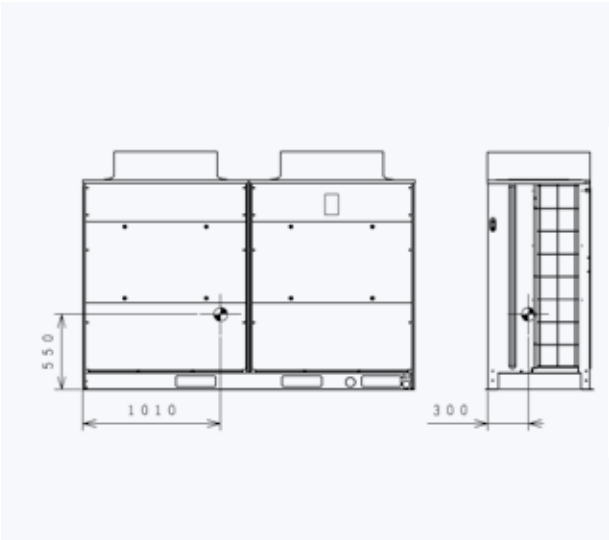

Models: RAS-28/30/32FSN

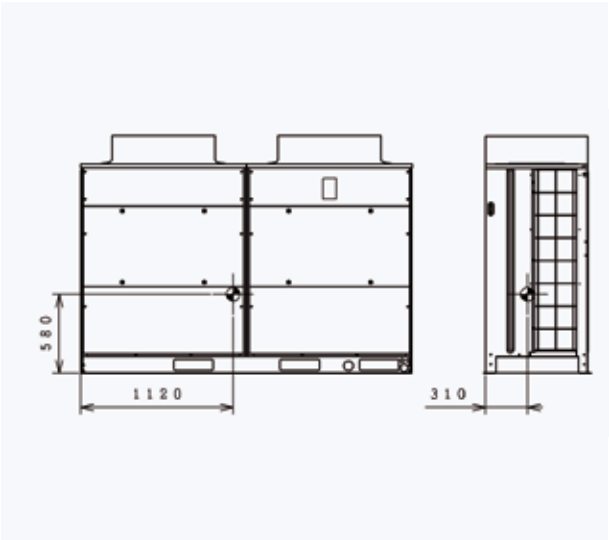

4.12.2. Center of Gravity for FXN(E)

Models: RAS-8/10/12FXN(E)

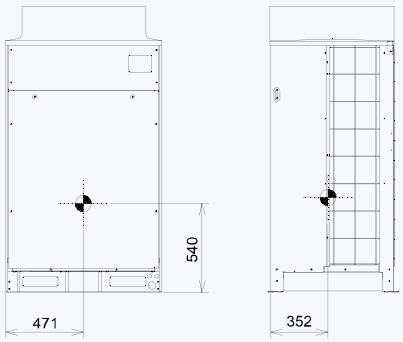

Models: RAS-16FXN

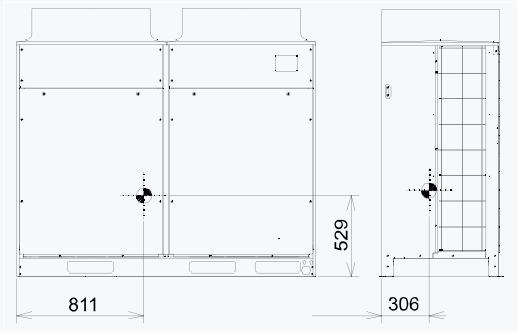

Models: RAS-18FXN

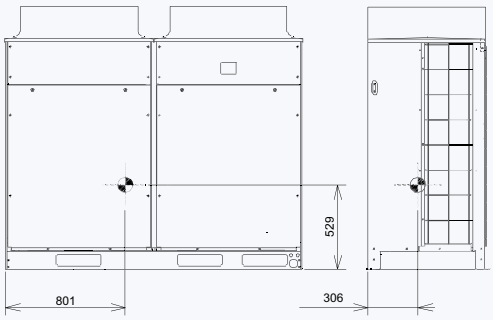

Models: RAS-20/22FXN

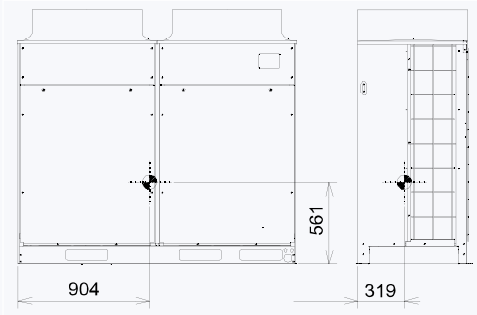

Models: RAS-24/26FXN

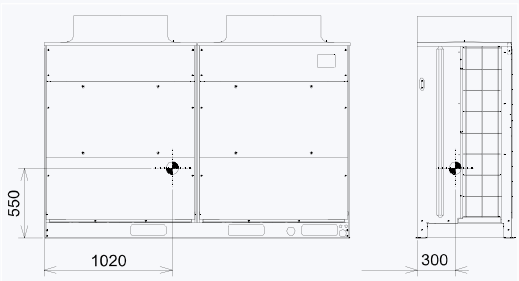

Models: RAS-28/30/32FXN

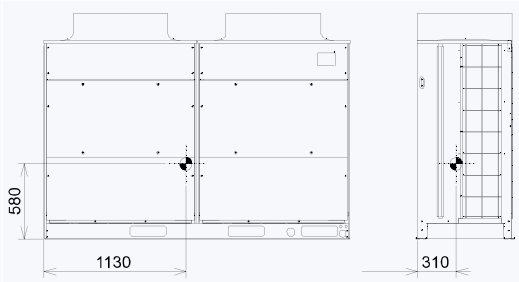

4

5. Working Range

This chapter shows the working range of the new Hitachi SET FREE FSN(E)/FXN(E)/FSVNE series.

Contents

5. Working Range.....188
5.1. Power Supply.....188
5.1.1. Temperature Range.....188

HITACHI
Inspire the Next

5.1. Power Supply.

Operating voltage	90% to 110% of the Rated Voltage
Voltage Imbalance	Within a 3% Deviation from Each Voltage at the Main Terminal of Outdoor Unit
Starting Voltage	Higher than 85% of the Rated Voltage

Following the Council Directive 89/336/EEC and its amendments 92/31/EEC and 93/68/EEC, relating to electromagnetic compatibility, next table indicates maximum permissible system impedance Z_{max} at the interface point of the user's supply, in accordance with EN61000-3-11.

MODEL	$Z_{máx}$ (Ω)
RAS-5FSN	-
RAS-8FSN(E)/FXN(E)	0.17
RAS-10FSN(E)/FXN(E)	0.16
RAS-12FSN(E) / FXN(E)	0.16
RAS-14FSN	0.16
RAS-16FSN/FXN	0.15
RAS-18FSN / FXN	0.14
RAS-20FSN/FXN	0.13
RAS-22FSN / FXN	0.12
RAS-24FSN/FXN	0.12
RAS-26FSN / FXN	0.11
RAS-28FSN	0.11
RAS-30FSN/FXN	0.10
RAS-32FSN / FXN	0.10
RAS-3FSVNE	0.35
RAS-4FSVNE	0.27
RAS-5FSVNE	0.26

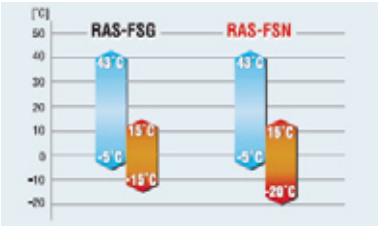

5.1.1. Temperature Range

The temperature range is indicated in the following table.

		Cooling Operation	Haeting Operation
Indoor Temperature	Minimum	21 °C DB / 15 °CWB	15 °C DB
	Maximum	32 °C DB/25 °C WB	27 °C DB
Outdoor Temperature	Minimum	–5 °C DB (*)	–20 °C WB (**)
	Maximum	43 °C DB	15 °CWB

NOTES:

(*) 10°C DB ~ -5 °C DB, Operation Control Range

(**) -12°C WB ~ -20 °C WB, Operation Control Range

DB: Dry Bulb; WB: Wet Bulb

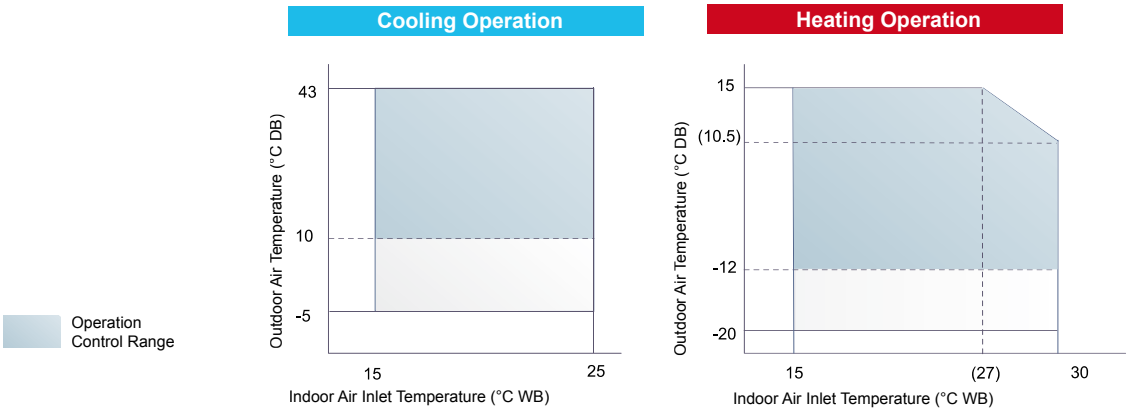

HITACHI
Inspire the Next

6. Refrigerant Cycle

This chapter shows the refrigerant cycle for each unit of the Hitachi SET FREE FSN(E)/FXN(E)/FSVNE series and Accessories.

Contents

6. Refrigerant Cycle 189

6.1. FSN(E) Units 190

6.1.1. RAS-5FSN 190
6.1.2. RAS-8FSNE 191
6.1.3. RAS-10/12FSNE 192
6.1.4. RAS-14/16FSN 193
6.1.5. RAS-18FSN 194
6.1.6. RAS-20/22FSN 195
6.1.7. RAS-24/26FSN 196
6.1.8. RAS-28~32FSN 197

6.2. FXN(E) Units 198

6.2.1. RAS-8FXNE 198
6.2.2. RAS-10/12FXNE 199
6.2.3. RAS-16/18FXN 200
6.2.4. RAS-20/22FXN 201
6.2.5. RAS-24/26FXN 202
6.2.6. RAS-28~32FXN 203

6.3. FSVNE Units 204

6.3.1. RAS-3FSVNE 204
6.3.2. RAS-4/5FSVNE 205

6.4. Accessories - CH Units 206

6.4.1. CH-4.0~12.0NE 206

6.1. FSN(E) Units

6.1.1. RAS-5FSN

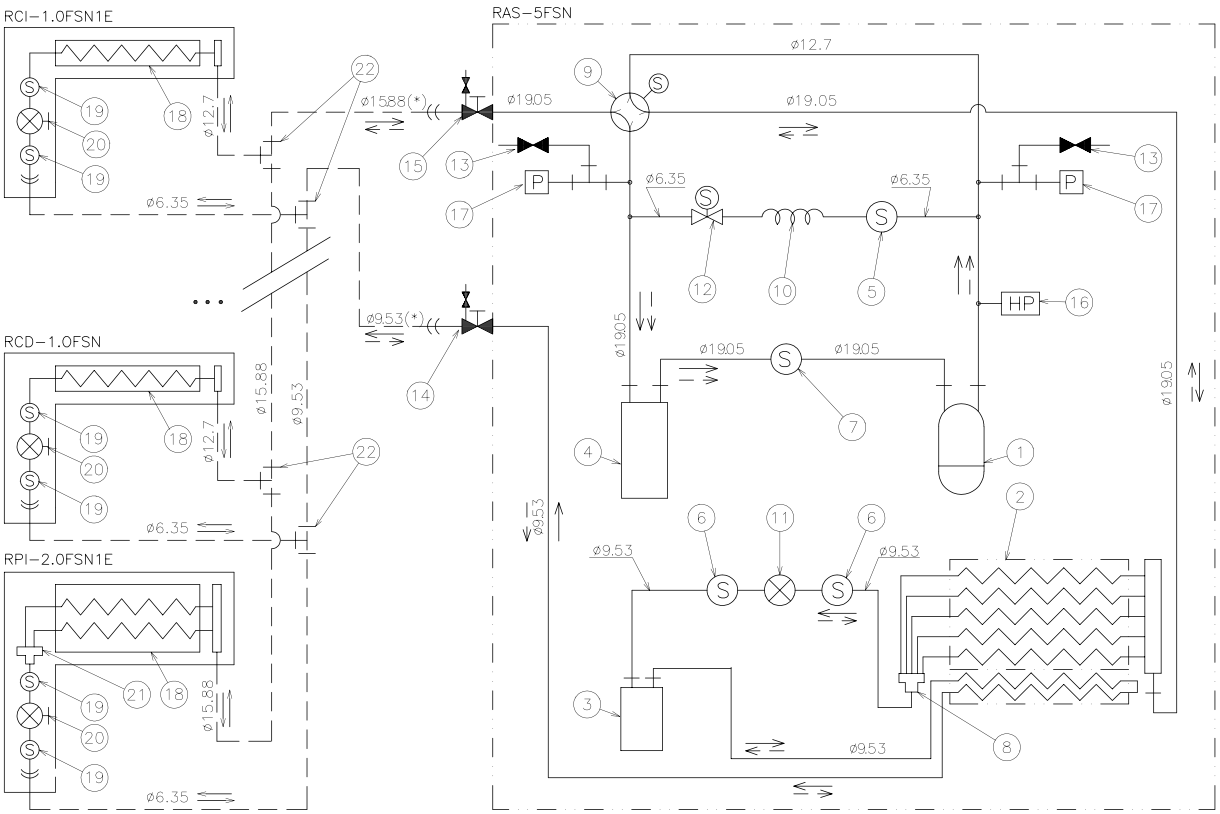

Refrigerant Flow for Cooling	Refrigerant Flow for Heating	Field-Supplied Refrigerant Piping	Connection with flare nut	Flange Connection	Brazing Connection	Refrigerant: R410A	Airtight Test Pressure 4.15 MPa

(*) If the equivalent piping length is more than 100 m, see chapter 7 (Piping and Refrigerant Charge).

N	Name of item	N	Name of item	N	Name of item
1	Compressor	9	4-way Valve	17	Sensor for Refrigerant Pressure
2	Heat exchanger	10	Capillary tube	18	Heat Exchanger Indoor
3	Reciver	11	Expansion valve	19	Strainer Indoor
4	Accumulator	12	Solenoid Valve (Gas Bypass)	20	Expansion Valve Indoor
5	Filter	13	Check Joint	21	Distributor Indoor
6	Filter	14	Stop Valve for liquid line	22	Multi-Kit E-102SN
7	Filter	15	Stop Valve for gas line		
8	Distributor	16	High-Pressure Switch for Protection		

6.1.2. RAS-8FSNE

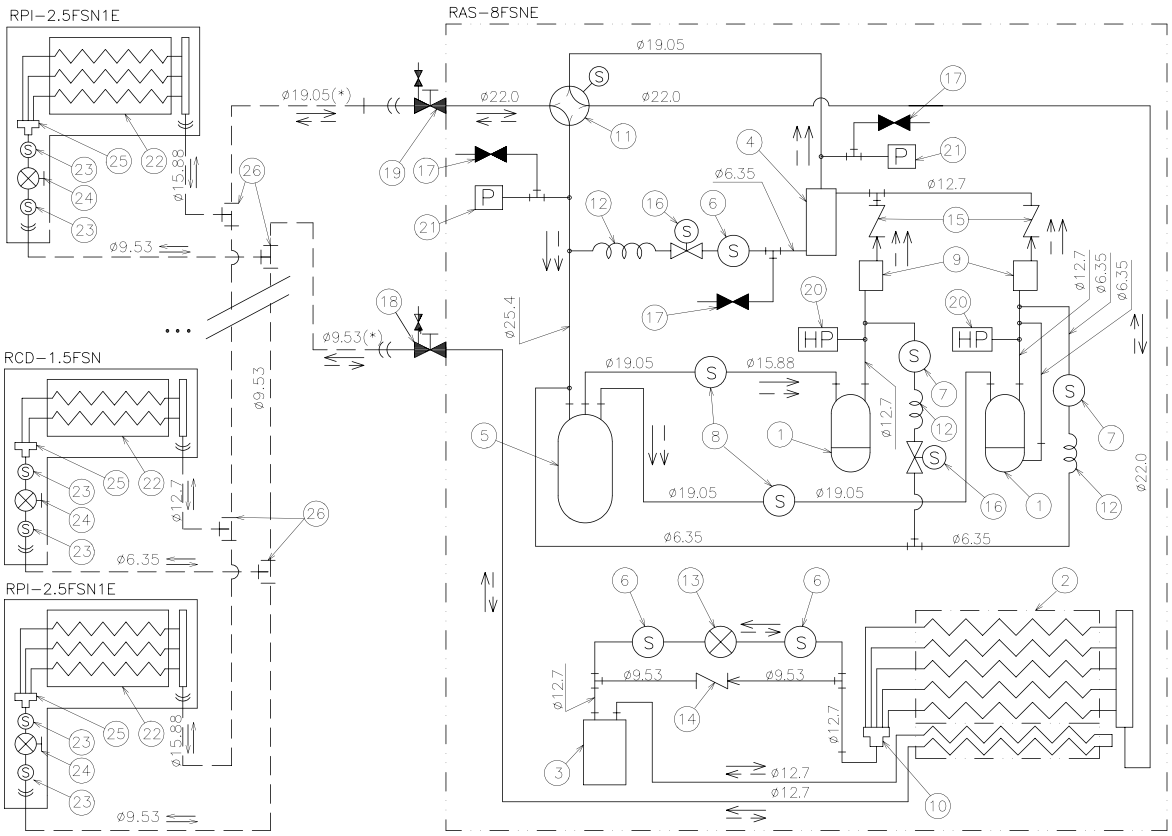

Refrigerant Flow for Cooling	Refrigerant Flow for Heating	Field-Supplied Refrigerant Piping	Connection with flare nut	Flange Connection	Brazing Connection	Refrigerant: R410A	Airtight Test Pressure 4.15 MPa

(*) If the equivalent piping length is more than 100 m, see chapter 7 (Piping and Refrigerant Charge).

N	Name of item	N	Name of item	N	Name of item
1	Compressor	10	Distributor	19	Stop Valve for gas line
2	Heat exchanger	11	4-way Valve	20	High-Pressure Switch for Protection
3	Reciver	12	Capillary tube	21	Sensor for Refrigerant Pressure
4	Oil separator	13	Expansion valve	22	Heat Exchanger Indoor
5	Accumulator	14	Check valve	23	Strainer Indoor
6	Filter	15	Check valve	24	Expansion Valve Indoor
7	Filter	16	Solenoid Valve (Gas Bypass)	25	Distributor Indoor
8	Filter	17	Check Joint	26	Multi-Kit E-102SN
9	Silenceer	18	Stop Valve for liquid line		

6.1.3. RAS-10/12FSNE

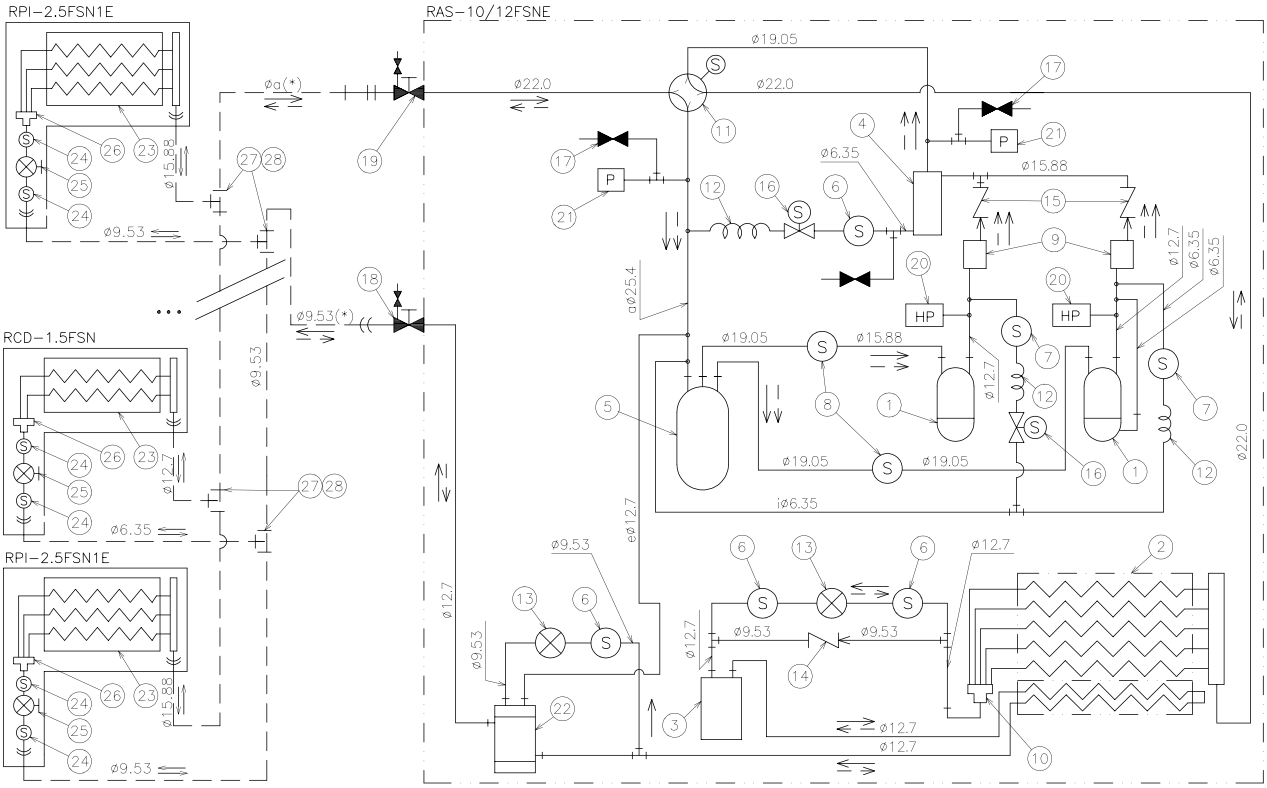

Model	a
RAS-10	9.53
RAS-12	12.7

Refrigerant Flow for Cooling	Refrigerant Flow for Heating	Field-Supplied Refrigerant Piping	Connection with flare nut	Flange Connection	Brazing Connection	Refrigerant: R410A	Airtight Test Pressure 4.15 MPa

(*) If the equivalent piping length is more than 100 m, see chapter 7 (Piping and Refrigerant Charge).

N	Name of item	N	Name of item	N	Name of item
1	Compressor	11	Distributor	21	High-Pressure Switch for Protection
2	Heat exchanger	12	4-way Valve	22	Sensor for Refrigerant Pressure
3	Reciver	13	Capillary tube	23	Heat Exchanger Indoor
4	Oil separator	14	Expansion valve	24	Strainer Indoor
5	Accumulator	15	Check valve	25	Expansion Valve Indoor
6	Filter	16	Check valve	26	Distributor Indoor
7	Filter	17	Solenoid Valve (Gas Bypass)	27	Multi-Kit E-102SN
8	Filter	18	Check Joint	28	Multi-Kit E-162SN
9	Filter	19	Stop Valve for liquid line		
10	Silenceer	20	Stop Valve for gas line		

6.1.4. RAS-14/16FSN

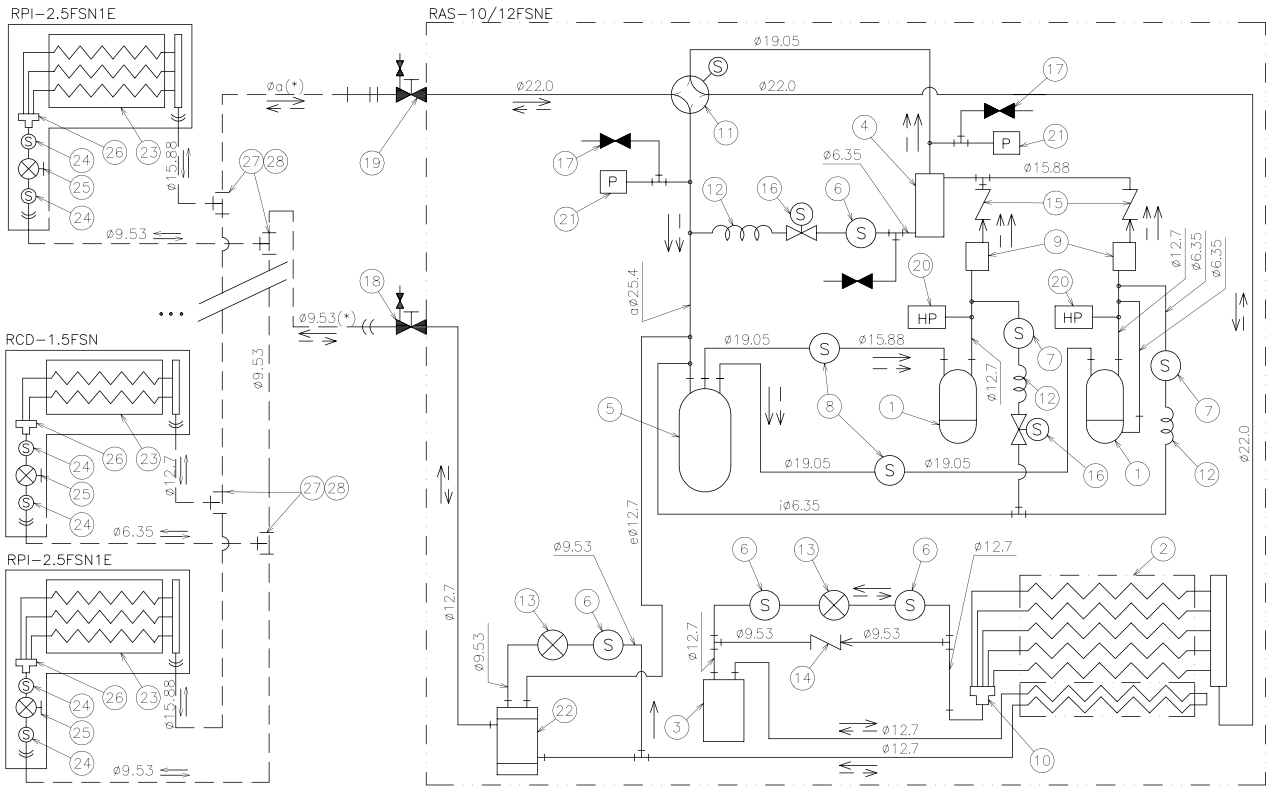

Model	a
RAS-14	25.4
RAS-16	18.6

Refrigerant Flow for Cooling	Refrigerant Flow for Heating	Field-Supplied Refrigerant Piping	Connection with flare nut	Flange Connection	Brazing Connection	Refrigerant: R410A	Airtight Test Pressure 4.15 MPa

(*) If the equivalent piping length is more than 100 m, see chapter 7 (Piping and Refrigerant Charge).

N	Name of item	N	Name of item	N	Name of item
1	Compressor	11	Distributor	21	High-Pressure Switch for Protection
2	Heat exchanger	12	4-way Valve	22	Sensor for Refrigerant Pressure
3	Reciver	13	Capillary tube	23	Heat Exchanger Indoor
4	Oil separator	14	Expansion valve	24	Strainer Indoor
5	Accumulator	15	Check valve	25	Expansion Valve Indoor
6	Filter	16	Check valve	26	Distributor Indoor
7	Filter	17	Solenoid Valve (Gas Bypass)	27	Multi-Kit E-102SN
8	Filter	18	Check Joint	28	Multi-Kit E-162SN
9	Filter	19	Stop Valve for liquid line		
10	Silenceer	20	Stop Valve for gas line		

6.1.5. RAS-18FSN

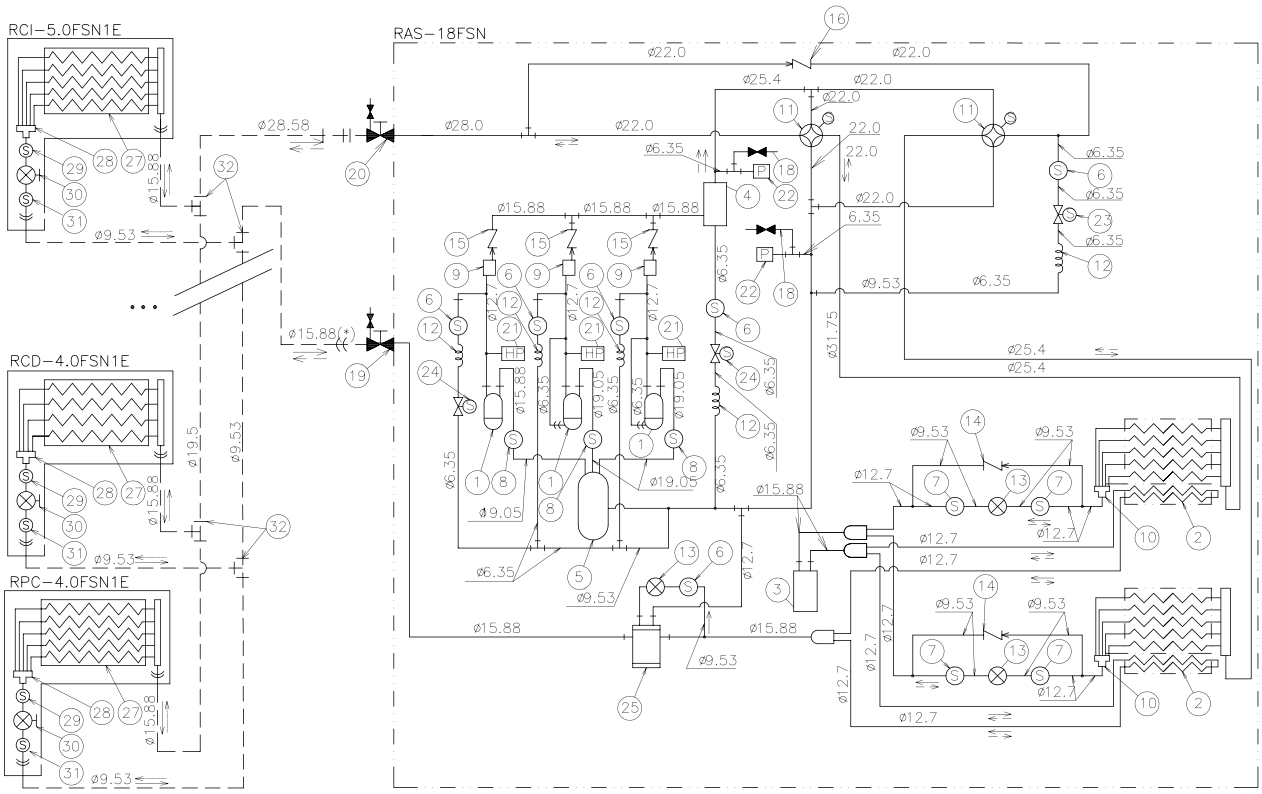

Refrigerant Flow for Cooling	Refrigerant Flow for Heating	Field-Supplied Refrigerant Piping	Connection with flare nut	Flange Connection	Brazing Connection	Refrigerant: R410A	Airtight Test Pressure 4.15 MPa

(*) If the equivalent piping length is more than 100 m, see chapter 7 (Piping and Refrigerant Charge).

N	Name of item	N	Name of item	N	Name of item
1	Compressor	12	Capillary tube	23	Sight glass
2	Heat exchanger	13	Expansion valve	24	Selenoid Valve
3	Reciver	14	Check valve	25	Selenoid Valve
4	Oil separator	15	Check valve	26	Plate Heat Exchanger
5	Accumulator	16	Check valve	27	Heat Exchanger Indoor
6	Filter	17	Solenoid Valve (Gas Bypass)	28	Distributor Indoor
7	Filter	18	Check Joint	29	Strainer Indoor
8	Filter	19	Stop Valve for liquid line	30	Expansion Valve Indoor
9	Silenceer	20	Stop Valve for gas line	31	Strainer Indoor
10	Distributor	21	High-Pressure Switch for Protection	32	Multi-kit
11	4-way Valve	22	Sensor for Refrigerant Pressure		

6.1.6. RAS-20/22FSN

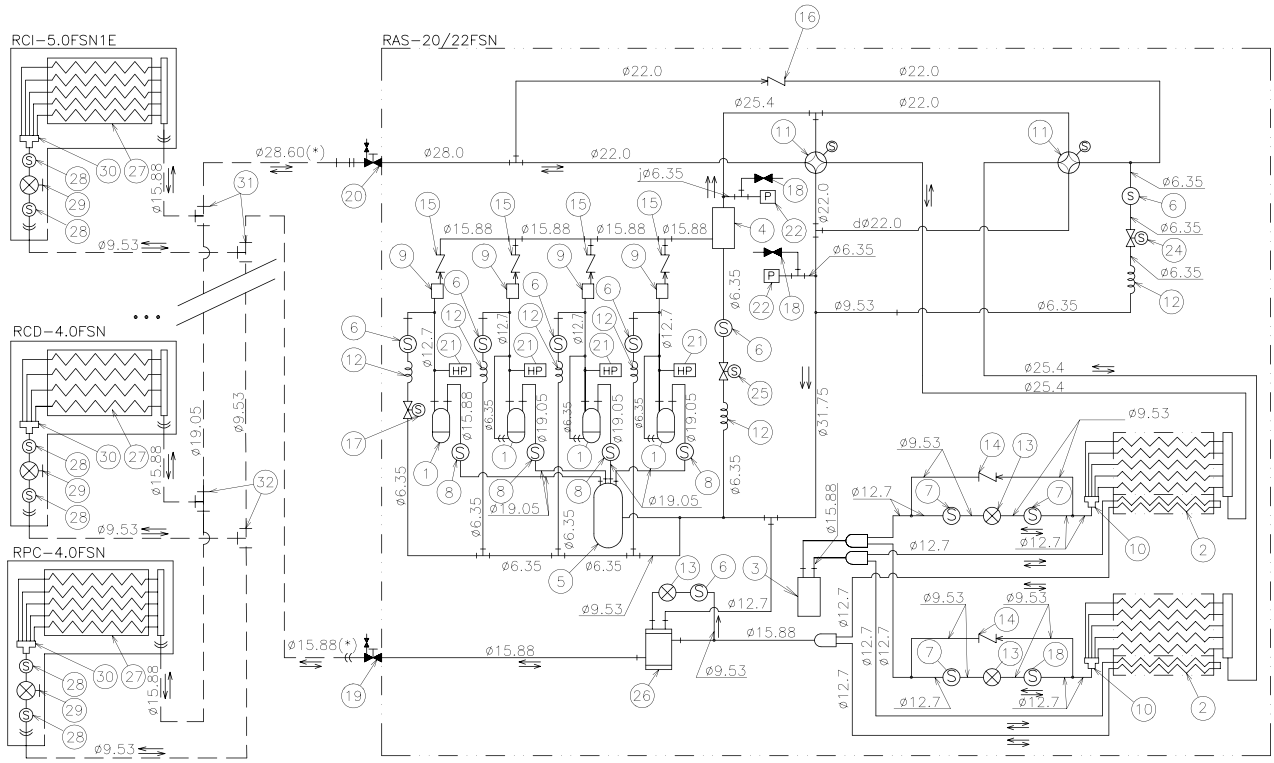

Refrigerant Flow for Cooling	Refrigerant Flow for Heating	Field-Supplied Refrigerant Piping	Connection with flare nut	Flange Connection	Brazing Connection	Refrigerant: R410A	Airtight Test Pressure 4.15 MPa

(*) If the equivalent piping length is more than 100 m, see chapter 7 (Piping and Refrigerant Charge).

N	Name of item	N	Name of item	N	Name of item
1	Compressor	12	Capillary tube	23	Sight glass
2	Heat exchanger	13	Expansion valve	24	Selenoid Valve
3	Reciver	14	Check valve	25	Selenoid Valve
4	Oil separator	15	Check valve	26	Plate Heat Exchanger
5	Accumulator	16	Check valve	27	Heat Exchanger Indoor
6	Strainer 3/8	17	Solenoid Valve (Gas Bypass)	28	Strainer Indoor
7	Strainer 1/2	18	Check Joint	29	Expansion Valve Indoor
8	Strainer 3/4	19	Stop Valve for liquid line	30	Distributor Indoor
9	Silenceer	20	Stop Valve for gas line	31	Multi-Kit E-202SN
10	Distributor	21	High-Pressure Switch for Protection	32	Multi-Kit E-102SN
11	4-way Valve	22	Sensor for Refrigerant Pressure		

6.1.7. RAS-24/26FSN

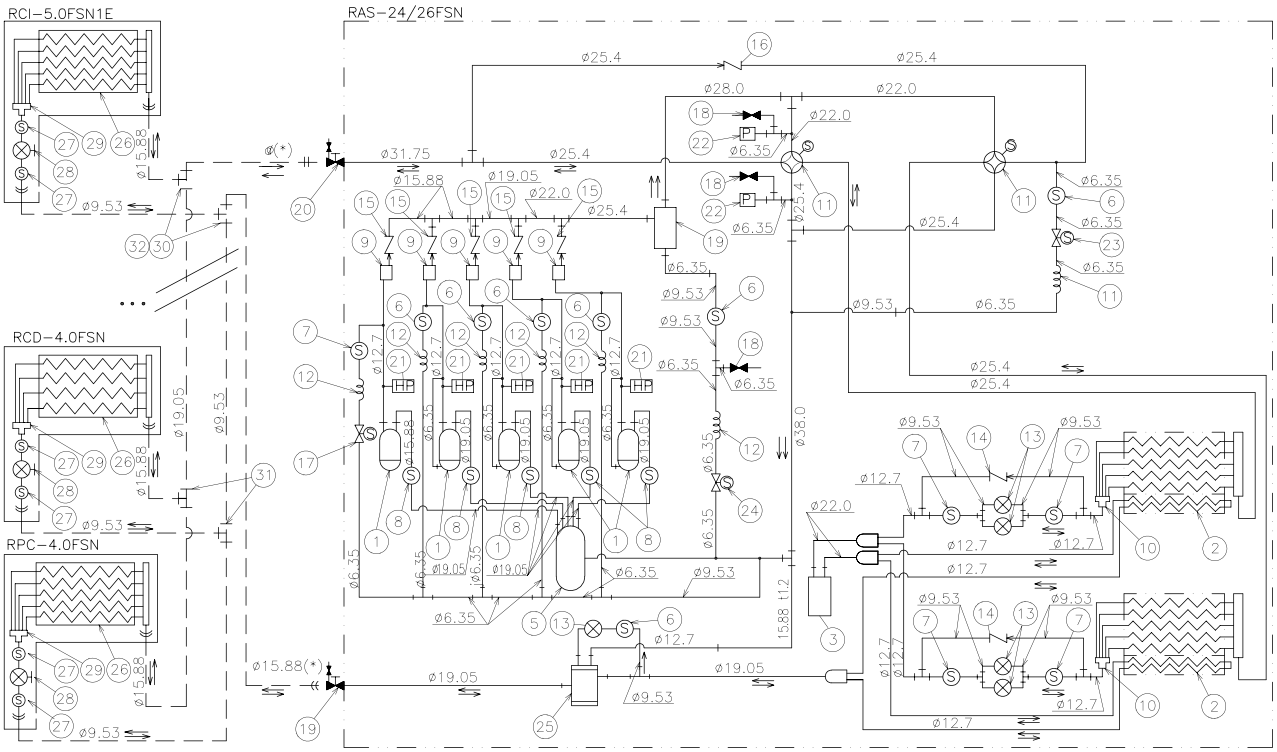

Model	a
RAS-24	28.6
RAS-26	31.75

Refrigerant Flow for Cooling	Refrigerant Flow for Heating	Field-Supplied Refrigerant Piping	Connection with flare nut	Flange Connection	Brazing Connection	Refrigerant: R410A	Airtight Test Pressure 4.15 MPa

(*) If the equivalent piping length is more than 100 m, see chapter 7 (Piping and Refrigerant Charge).

N	Name of item	N	Name of item	N	Name of item
1	Compressor	12	Capillary tube	23	Selenoid Valve
2	Heat exchanger	13	Expansion valve	24	Selenoid Valve
3	Reciver	14	Check valve	25	Plate Heat Exchanger
4	Oil separator	15	Check valve	26	Heat Exchanger Indoor
5	Accumulator	16	Check valve	27	Strainer Indoor
6	Strainer 3/8	17	Solenoid Valve (Gas Bypass)	28	Expansion Valve Indoor
7	Strainer 1/2	18	Check Joint	29	Distributor Indoor
8	Strainer 3/4	19	Stop Valve for liquid line	30	Multi-Kit E-242SN (‘)
9	Silenceer	20	Stop Valve for gas line	31	Multi-Kit E-102SN
10	Distributor	21	High-Pressure Switch for Protection	32	Multi-Kit E-302SN (“)
11	4-way Valve	22	Sensor for Refrigerant Pressure		

(‘) For RAS-24 units only.
(“) For RAS-26 units only.

6.1.8. RAS-28~32FSN

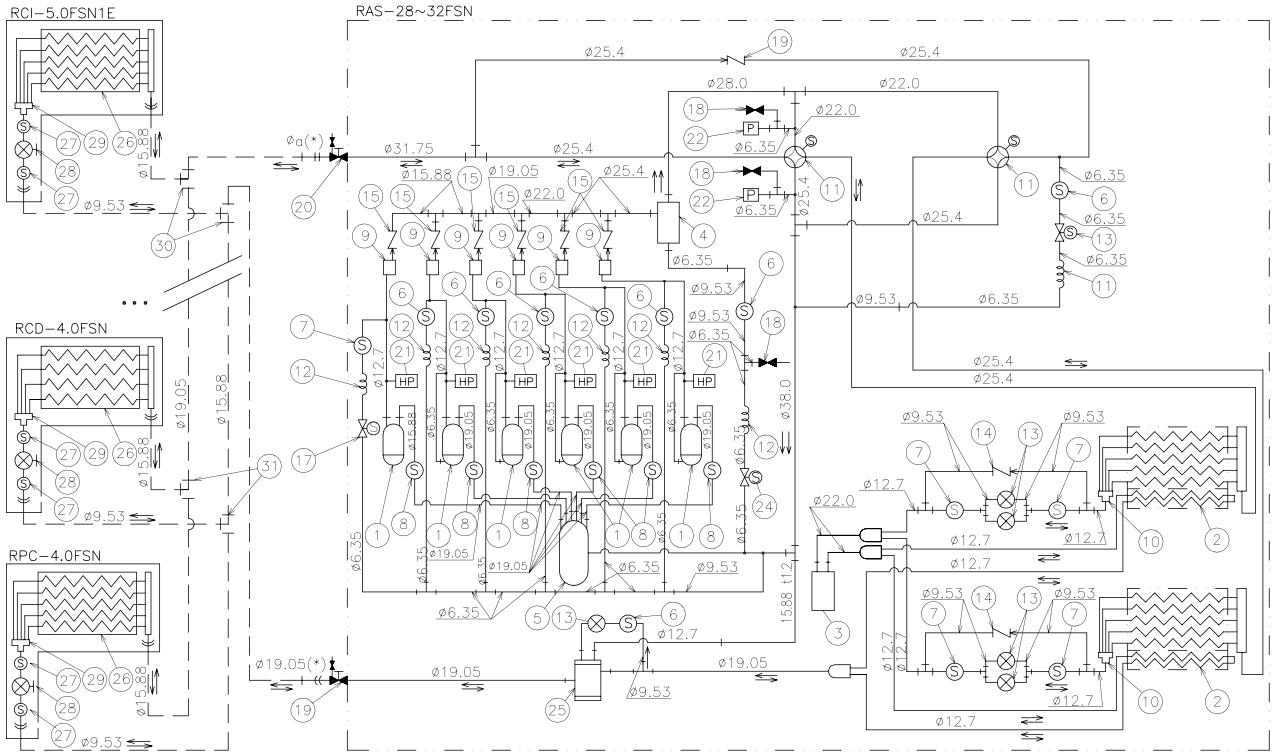

Refrigerant Flow for Cooling	Refrigerant Flow for Heating	Field-Supplied Refrigerant Piping	Connection with flare nut	Flange Connection	Brazing Connection	Refrigerant: R410A	Airtight Test Pressure 4.15 MPa

(*) If the equivalent piping length is more than 100 m, see chapter 7 (Piping and Refrigerant Charge).

N	Name of item	N	Name of item	N	Name of item
1	Compressor	12	Capillary tube	23	Selenoid Valve
2	Heat exchanger	13	Expansion valve	24	Selenoid Valve
3	Reciver	14	Check Valve 3/8	25	Plate Heat Exchanger
4	Oil separator	15	Check Valve 1/2	26	Heat Exchanger Indoor
5	Accumulator	16	Check Valve 1/1	27	Strainer Indoor
6	Strainer 3/8	17	Solenoid Valve (Gas Bypass)	28	Expansion Valve Indoor
7	Strainer 1/2	18	Check Joint	29	Distributor Indoor
8	Strainer 3/4	19	Stop Valve for liquid line	30	Multi-Kit E-302SN
9	Silenceer	20	Stop Valve for gas line	31	Multi-Kit E-102SN
10	Distributor	21	High-Pressure Switch for Protection		
11	4-way Valve	22	Sensor for Refrigerant Pressure		

6.2. FXN(E) Units

6.2.1. RAS-8FXNE

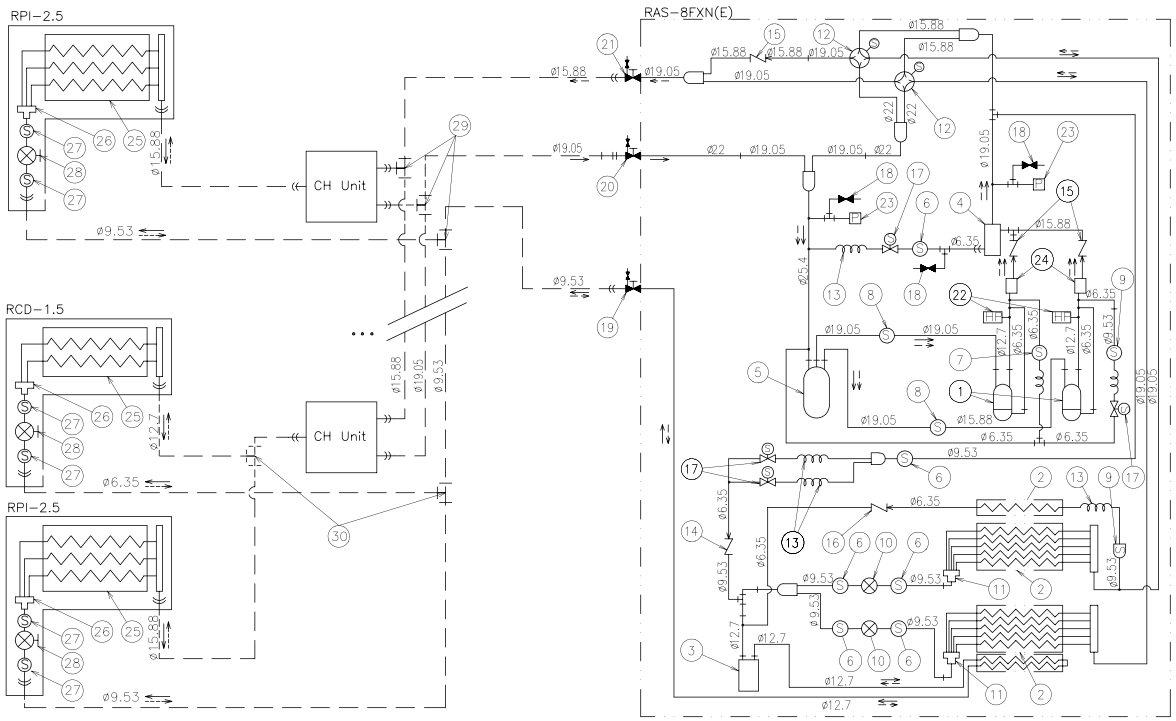

Refrigerant Flow for Cooling	Refrigerant Flow for Heating	Field-Supplied Refrigerant Piping	Connection with flare nut	Flange Connection	Brazing Connection	Refrigerant: R410A	Airtight Test Pressure 4.15 MPa

(*) If the equivalent piping length is more than 100 m, see chapter 7 (Piping and Refrigerant Charge).

N	Name of item	N	Name of item	N	Name of item
1	Compressor	11	Distributor	21	Stop Valve for gas line (High)
2	Heat exchanger	12	Expansion valve	22	High-Pressure Switch for Protection
3	Reciver	13	Capillary tube	23	Sensor for Refrigerant Protection
4	Oil separator	14	Check valve	24	Silenceer
5	Accumulator	15	Check valve	25	Heat Exchanger Indoor
6	Filter	16	Check valve	26	Distributor Indoor
7	Filter	17	Solenoid Valve (Gas Bypass)	27	Expansion valve
8	Filter	18	Check Joint	28	Filter
9	Filter	19	Stop Valve for liquid line	29	Multi-Kit E-102XN
10	Expansion valve	20	Stop Valve for gas line (Low)	30	Multi-Kit E-102SN

6.2.2. RAS-10/12FXNE

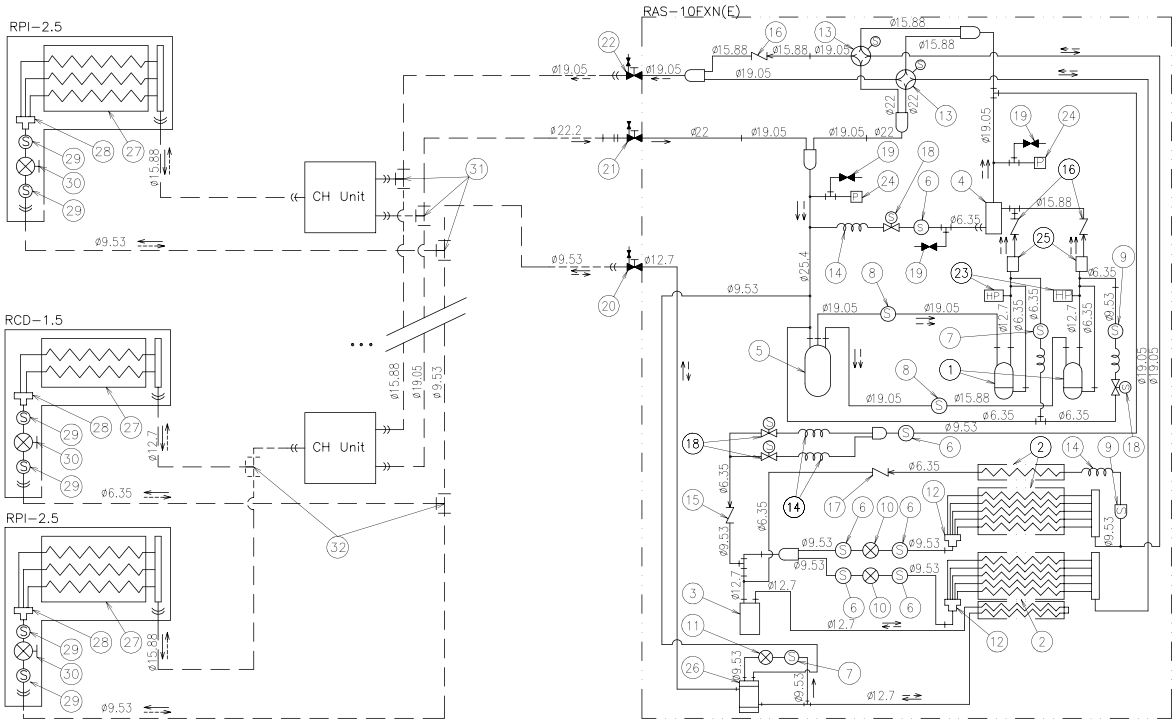

Refrigerant Flow for Cooling	Refrigerant Flow for Heating	Field-Supplied Refrigerant Piping	Connection with flare nut	Flange Connection	Brazing Connection	Refrigerant: R410A	Airtight Test Pressure 4.15 MPa

(*) If the equivalent piping length is more than 100 m, see chapter 7 (Piping and Refrigerant Charge).

N	Name of item	N	Name of item	N	Name of item
1	Compressor	12	Distributor	23	Heat Exchanger Indoor
2	Heat exchanger	13	Expansion valve	24	High-Pressure Switch for Protection
3	Reciver	14	Capillary tube	25	Silenceer
4	Oil separator	15	Check valve	26	Plate Heat Exchanger
5	Accumulator	16	Check valve	27	Heat Exchanger Indoor
6	Filter	17	Check valve	28	Distributor Indoor
7	Filter	18	Selenoid Valve	29	Expansion Valve Indoor
8	Filter	19	Check Joint	30	Strainer Indoor
9	Filter	20	Stop Valve for liquid line	31	Multi-Kit E-102XN
10	Expansion valve	21	Stop Valve for gas line (Low)	31	Multi-Kit E-102SN
11	Expansion valve	22	Stop Valve for gas line (High)		

6.2.3. RAS-16/18FXN

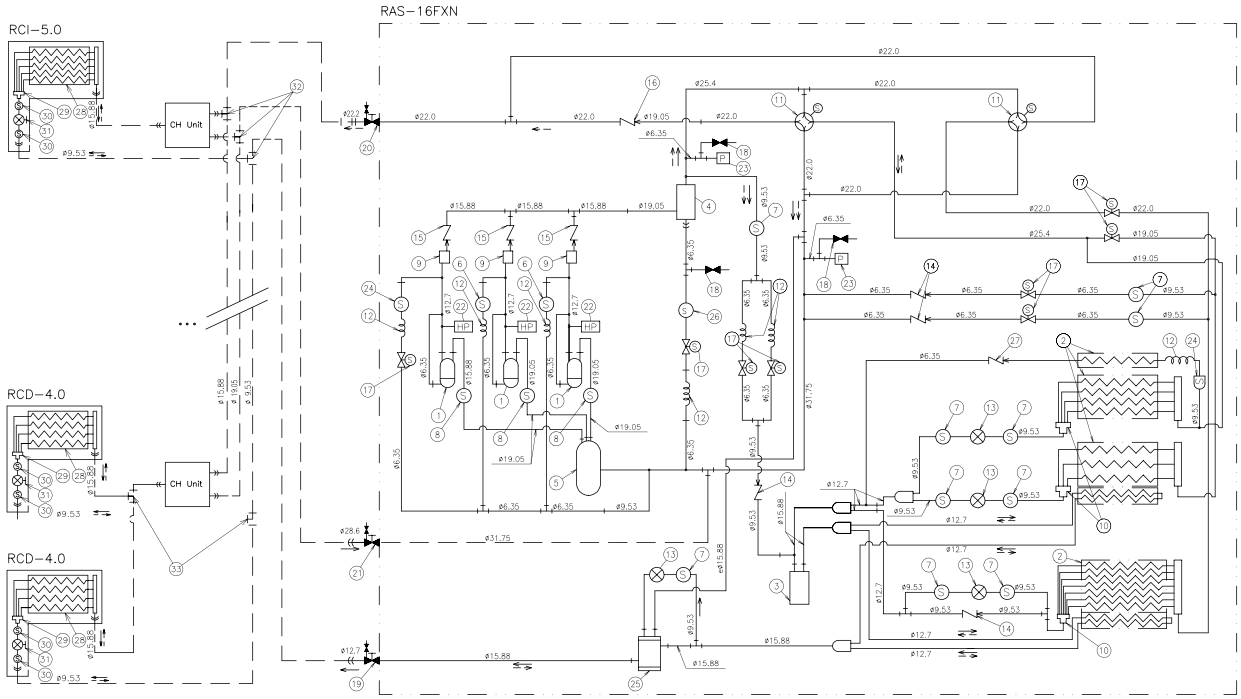

Refrigerant Flow for Cooling	Refrigerant Flow for Heating	Field-Supplied Refrigerant Piping	Connection with flare nut	Flange Connection	Brazing Connection	Refrigerant: R410A	Airtight Test Pressure 4.15 MPa

(*) If the equivalent piping length is more than 100 m, see chapter 7 (Piping and Refrigerant Charge).

N	Name of item	N	Name of item	N	Name of item
1	Compressor	12	Capillary tube	23	Sensor for Refrigerant Pressure
2	Heat exchanger	13	Expansion valve	24	Filter
3	Reciver	14	Check valve	25	Plate Heat Exchanger
4	Oil separator	15	Check valve	26	Filter
5	Accumulator	16	Check valve	27	Check valve
6	Filter	17	Selenoid Valve	28	Heat Exchanger Indoor
7	Filter	18	Check Joint	29	Distributor Indoor
8	Filter	19	Stop Valve for liquid line	30	Expansion Valve Indoor
9	Filter	20	Stop Valve for gas (High) Line	31	Filter
10	Distributor	21	Stop Valve for gas line (Low)	32	Multi-Kit E-162XN
11	4-way Valve	22	High-Pressure Switch for Protection	33	Multi-Kit E-102SN

6.2.4. RAS-20/22FXN

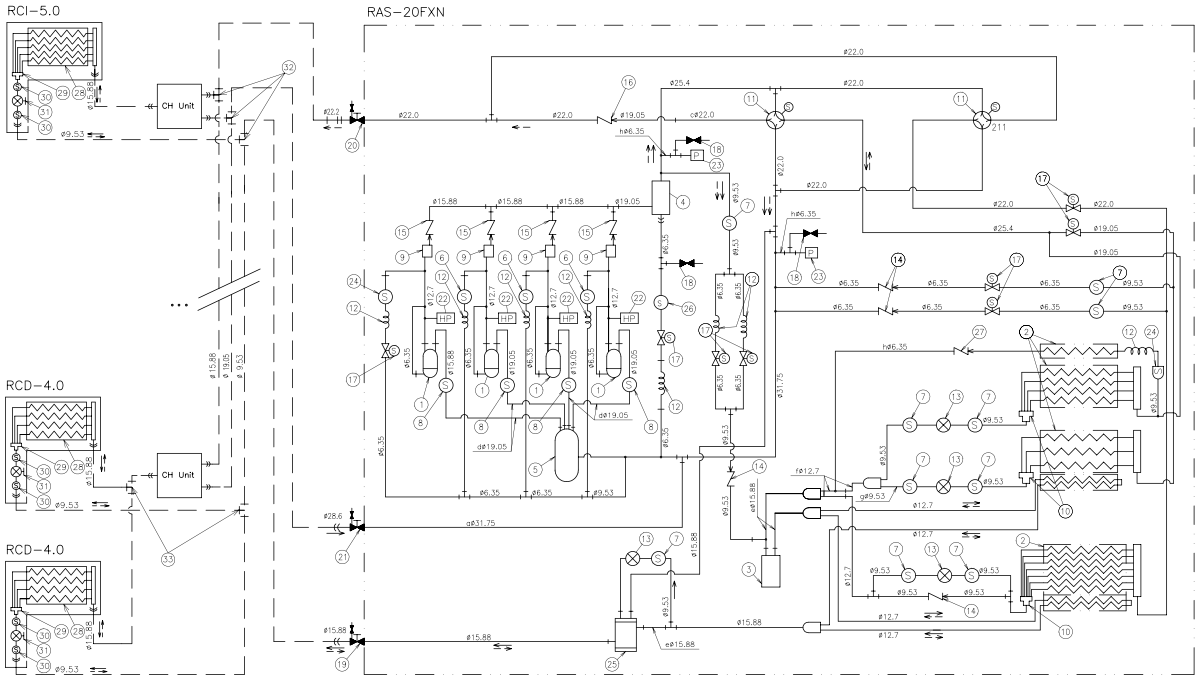

Refrigerant Flow for Cooling	Refrigerant Flow for Heating	Field-Supplied Refrigerant Piping	Connection with flare nut	Flange Connection	Brazing Connection	Refrigerant: R410A	Airtight Test Pressure 4.15 MPa

(*) If the equivalent piping length is more than 100 m, see chapter 7 (Piping and Refrigerant Charge).

N	Name of item	N	Name of item	N	Name of item
1	Compressor	12	Capillary tube	23	Sensor for Refrigerant Pressure
2	Heat exchanger	13	Expansion valve	24	Filter
3	Reciver	14	Check valve	25	Plate Heat Exchanger
4	Oil separator	15	Check valve	26	Filter
5	Accumulator	16	Check valve	27	Check valve
6	Filter	17	Selenoid Valve	28	Heat Exchanger Indoor
7	Filter	18	Check Joint	29	Distributor Indoor
8	Filter	19	Stop Valve for liquid line	30	Expansion Valve Indoor
9	Filter	20	Stop Valve for gas (High) Line	31	Filter
10	Distributor	21	Stop Valve for gas line (Low)	32	Multi-Kit E-202XN
11	4-way Valve	22	High-Pressure Switch for Protection	33	Multi-Kit E-102SN

6.2.5. RAS-24/26FXN

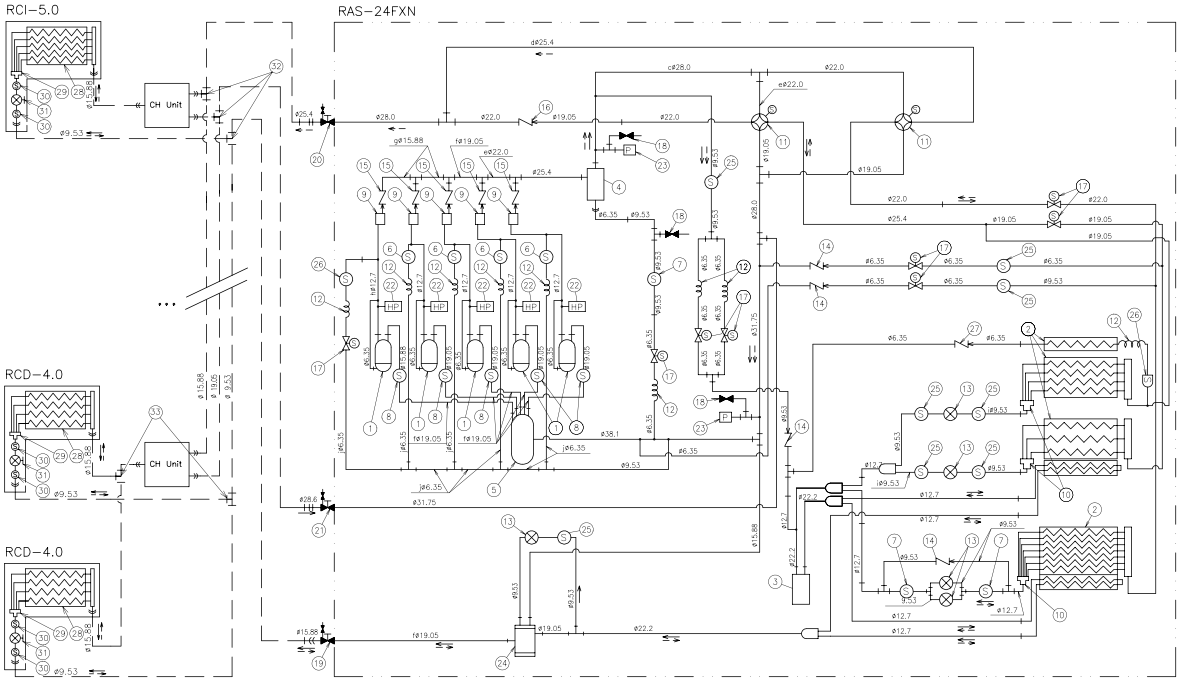

Refrigerant Flow for Cooling	Refrigerant Flow for Heating	Field-Supplied Refrigerant Piping	Connection with flare nut	Flange Connection	Brazing Connection	Refrigerant: R410A	Airtight Test Pressure 4.15 MPa

(*) If the equivalent piping length is more than 100 m, see chapter 7 (Piping and Refrigerant Charge).

N	Name of item	N	Name of item	N	Name of item
1	Compressor	12	Capillary tube	23	Sensor for Refrigerant Pressure
2	Heat exchanger	13	Expansion valve	24	Filter
3	Reciver	14	Check valve	25	Plate Heat Exchanger
4	Oil separator	15	Check valve	26	Filter
5	Accumulator	16	Check valve	27	Check valve
6	Filter	17	Selenoid Valve	28	Heat Exchanger Indoor
7	Filter	18	Check Joint	29	Distributor Indoor
8	Filter	19	Stop Valve for liquid line	30	Expansion Valve Indoor
9	Filter	20	Stop Valve for gas (High) Line	31	Filter
10	Distributor	21	Stop Valve for gas line (Low)	32	Multi-Kit E-242XN
11	4-way Valve	22	High-Pressure Switch for Protection	33	Multi-Kit E-102SN

6.2.6. RAS-28~32FXN

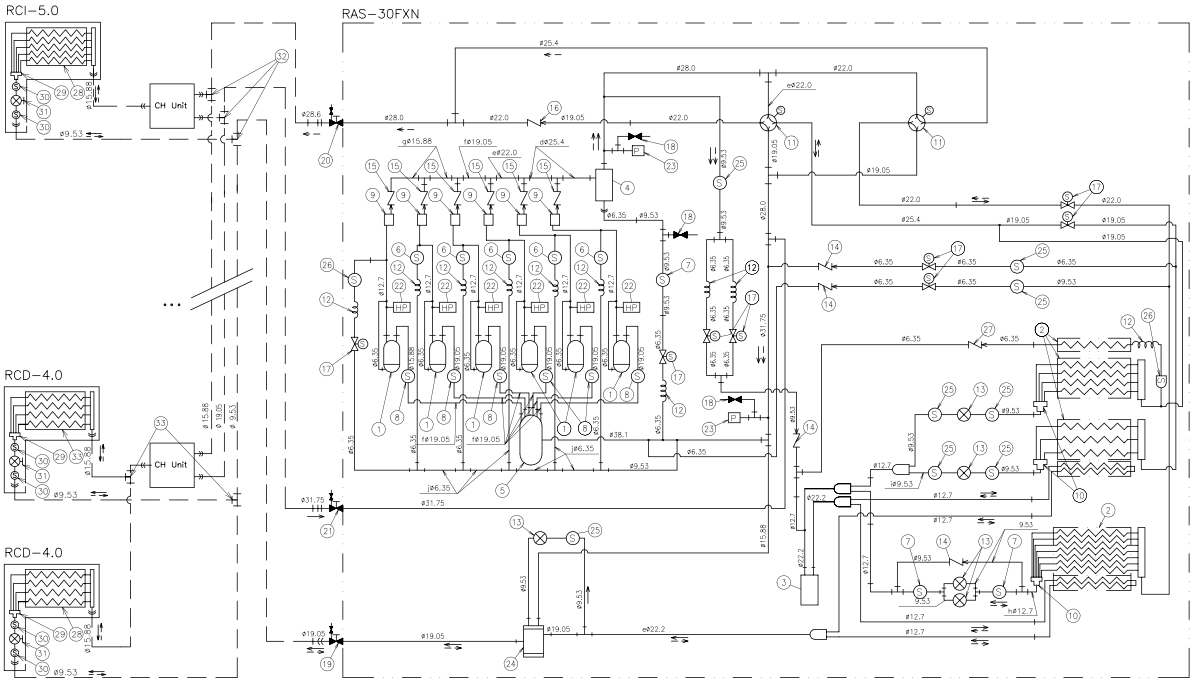

Refrigerant Flow for Cooling	Refrigerant Flow for Heating	Field-Supplied Refrigerant Piping	Connection with flare nut	Flange Connection	Brazing Connection	Refrigerant: R410A	Airtight Test Pressure 4.15 MPa

(*) If the equivalent piping length is more than 100 m, see chapter 7 (Piping and Refrigerant Charge).

N	Name of item	N	Name of item	N	Name of item
1	Compressor	12	Capillary tube	23	Sensor for Refrigerant Pressure
2	Heat exchanger	13	Expansion valve	24	Filter
3	Reciver	14	Check valve	25	Plate Heat Exchanger
4	Oil separator	15	Check valve	26	Filter
5	Accumulator	16	Check valve	27	Check valve
6	Filter	17	Selenoid Valve	28	Heat Exchanger Indoor
7	Filter	18	Check Joint	29	Distributor Indoor
8	Filter	19	Stop Valve for liquid line	30	Expansion Valve Indoor
9	Filter	20	Stop Valve for gas (High) Line	31	Filter
10	Distributor	21	Stop Valve for gas line (Low)	32	Multi-Kit E-322XN
11	4-way Valve	22	High-Pressure Switch for Protection	33	Multi-Kit E-102SN

6.3. FSVNE Units

6.3.1. RAS-3FSVNE

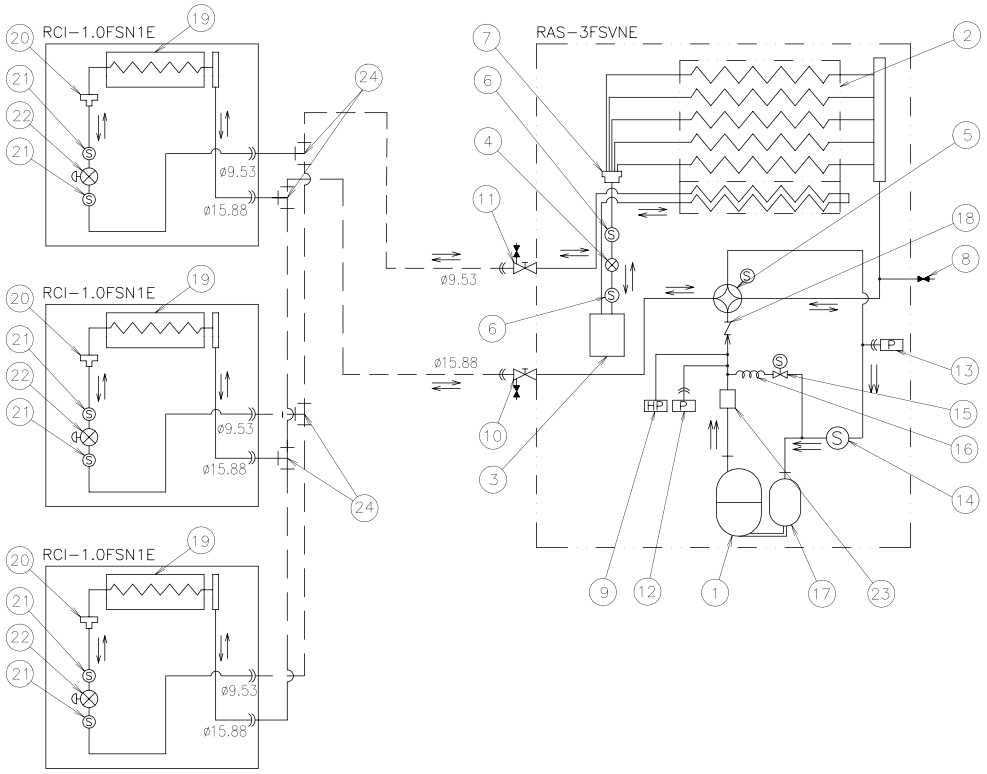

Refrigerant Flow for Cooling	Refrigerant Flow for Heating	Field-Supplied Refrigerant Piping	Connection with flare nut	Flange Connection	Brazing Connection	Refrigerant: R410A	Airtight Test Pressure 4.15 MPa

(*) If the equivalent piping length is more than 100 m, see chapter 7 (Piping and Refrigerant Charge).

N	Name of item	N	Name of item	N	Name of item
1	Compressor	9	High-Pressure Switch for Protection	17	Accumulator
2	Heat exchanger	10	Stop Valve for gas line	18	Check valve
3	Reciver	11	Stop Valve for liquid line	19	Heat Exchanger Indoor
4	Expansion valve	12	Low pressure Sensor	20	Indoor Distributor
5	4-way Valve	13	High pressure sensor	21	Expansion Valve Indoor
6	Filter	14	Filter	22	Strainer Indoor
7	Distributor	15	Solenoid Valve (Gas Bypass)	23	Multi-Kit E-102SN
8	Check Joint	16	Capillary tube		

6.3.2. RAS-4/5FSVNE

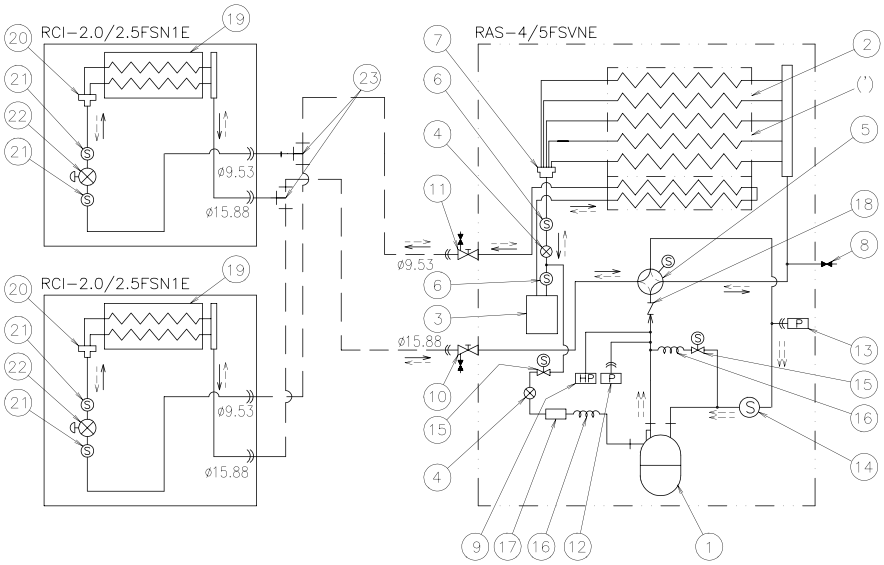

Refrigerant Flow for Cooling	Refrigerant Flow for Heating	Field-Supplied Refrigerant Piping	Connection with flare nut	Flange Connection	Brazing Connection	Refrigerant: R410A	Airtight Test Pressure 4.15 MPa

(*) If the equivalent piping length is more than 100 m, see chapter 7 (Piping and Refrigerant Charge).
(') The exchanger has 5 steps in unit RAS-5.

N	Name of item	N	Name of item	N	Name of item
1	Compressor	9	High-Pressure Switch for Protection	17	Silenceer
2	Heat exchanger	10	Stop Valve for gas line	18	Check valve
3	Reciver	11	Stop Valve for liquid line	19	Heat Exchanger Indoor
4	Expansion valve	12	Low pressure Sensor	20	Indoor Distributor
5	4-way Valve	13	High pressure sensor	21	Expansion Valve Indoor
6	Filter	14	Filter	22	Strainer Indoor
7	Distributor	15	Solenoid Valve (Gas Bypass)	23	Multi-Kit E-102SN
8	Check Joint	16	Capillary tube		

6.4. Accessories - CH Units

6.4.1. CH-4.0~12.0NE

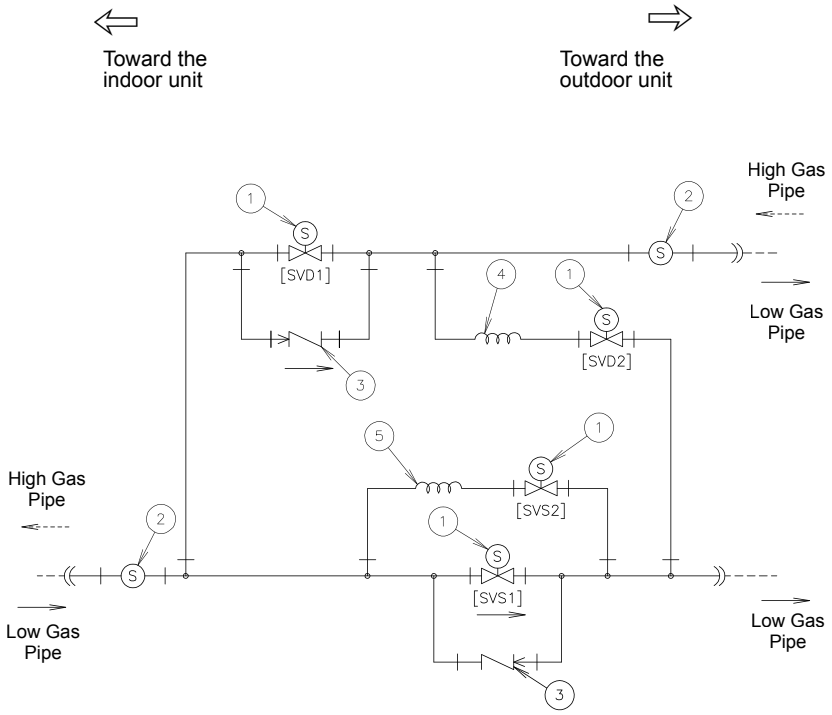

Refrigerant Flow for Cooling	Refrigerant Flow for Heating	Field-Supplied Refrigerant Piping	Connection with flare nut	Flange Connection	Brazing Connection	Refrigerant: R410A	Airtight Test Pressure 4.15 MPa

The inscription between brackets "[]" appears in the electrical wiring diagram.
(*) Only if all the units are in cooling mode.

N	Name of item
1	Solenoid valve
2	Filter
3	Check valve
4	Capillary tube
5	Capillary tube

HITACHI
Inspire the Next

7. Piping and Refrigerant Charge

This chapter describes how to connect that refrigerant piping and how to change the refrigerant quantity in the system for the new Hitachi SET FREE FSN(E)/FXN(E)/FSVNE Series.

Contents

7. Piping and Refrigerant Charge 207
7.1. Refrigerant Piping Selection 208
7.1.1. Minimum and Maximum Number of Indoor Units per Outdoor Unit 208
7.1.2. Refrigerant Piping Work Range 209
7.1.3. Refrigerant Piping Length 210
7.1.4. Piping Size and Multikits for FSN(E) System 211
7.1.5. Piping Size and Multikits for FXN(E) System 214
7.1.6. Piping Size and Multikit for FVSNE System 218
7.2. Multikits and distributors 219
7.2.1. Dimensional Data 219
7.2.2. Distribution Method 225
7.2.3. Piping Materials 228
7.3. Refrigerant Charging Quantity 230
7.3.1. Guide of Additional Refrigerant Charge Calculation (R410A) 230
7.3.2. Samples 233
7.4. Caution on Refrigerant Leakage 245
7.4.1. Maximum Permissible Concentration of the HCFC Gas 245
7.4.2. Calculation of the Refrigerant Concentration 245
7.4.3. Countermeasure for the Refrigerant Leakage According to the KHK Standard 246

7.1. Refrigerant Piping Selection

The Set-Free system was designed to take into consideration all possible installation types. Therefore, HITACHI is using two different refrigerant pipe distributors: multikit system and distributor system.

The multikit system is available for two and three pipe systems. The distributor system is also available for two pipe systems, and for three pipe systems only after the CH-Unit. The three pipes system (FXN(E)) is using only two pipes after the CH-Unit.

Piping System	3 Pipes Systems	2 Pipes Systems	
	FXN(E)	FSN(E)	FSVNE
Multikit	●	●	●
Distributor	● (*)	●	●

(*) Only after CH-Unit

● : Available

7.1.1. Minimum and Maximum Number of Indoor Units per Outdoor Unit

The new Hi-Multi Set Free Series allows you to connect more indoor units per outdoor unit. The various possible combinations are shown in the following table. The maximum number of indoor units to be connected has increased because of the reduction in power consumption.

Outdoor Units Model	Indoor Unit			
	Maximum combined power (HP)	Minimum number of indoor units	Maximum Indoor Units	Minimum individual operational power requirement (HP)
RAS-3FSVNE	3.9	1	4	0.8
RAS-4FSVNE	5.2	1	6	0.8
RAS-5FSVNE	6.5	1	7	0.8
RAS-5FSN	6.5	1	8	0.8
RAS-8FSNE/FXNE	10.4	2	13	0.8
RAS-10FSNE/FXNE	13.0	2	16	0.8
RAS-12FSNE/FXNE	15.6	2	16	0.8
RAS-14FSN	18.2	2	20	0.8
RAS-16FSN/FXN	20.8	2	20 (new)	0.8
RAS-18FSN/FXN	23.4	2	20	0.8
RAS-20FSN/FXN	26.0	2	20 (new)	0.8 (new)
RAS-22FSN/FXN	28.6	2	20	0.8
RAS-24FSN/FXN	31.0	2	27*	0.8 (new)*
RAS-26FSN/FXN	33.8	2	29	0.8
RAS-30FSN/FXN	39.0	2	32*	0.8 (new)*
RAS-32FSN/FXN	41.6	2	32	0.8

(*) Total number of 0.8 HP and 1.0 HP units is limited to 12.

HITACHI
Inspire the Next

WARNINGS:

The liquid piping and the gas piping shall be the same piping length and run along the same route.

Multikits for multiple connections (Optional Accessory as system parts) must be used for the branch pipe to the Indoor Unit.

Install Multi-Kits at the same horizontal level.

Oil trap every Ht of height difference for gas piping between Indoor Unit and Outdoor Units is required when the Outdoor Unit is located higher than the Indoor Units for FSN(E) and FXN(E) series.

However, if the Outdoor Unit is located lower than the Indoor Unit, it is not required to put oil traps in the suction gas piping, since the oil in the system can return to the compressor thanks to the oil return control system.

NOTES:

(1) See sections 7.1.3 and 7.1.4 for additional information

(2) FSN(E): From 5 to 10HP: 25 m

(3) FXN(E): From 8 to 10HP: 25 m

OU: No.2 system

IU: Indoor Unit

7.1.2. Refrigerant Piping Work Range

The piping selection and distribution must be designed considering the specifications that are described in the Warnings section.

◆ Two Pipes System FSN(E)

(m)

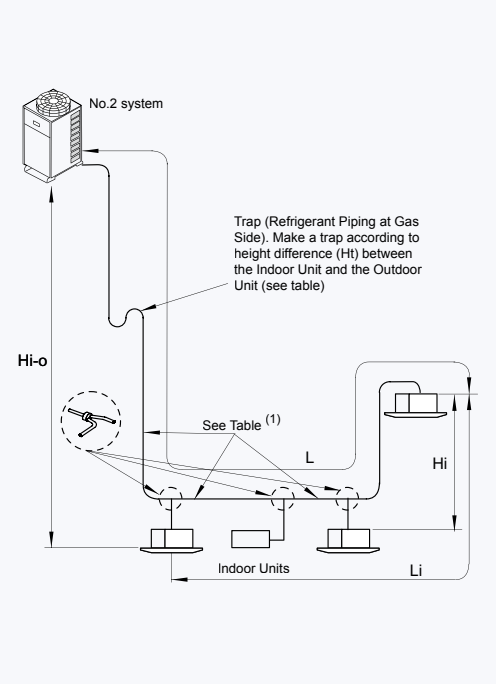

Item		Maximum Applicable Range FSN(E)
Length between OU and farthest IU (L)	Actual	150
	Equivalent	175
Piping length from 1st Multikit to the furthest IU (Li)		40
Total length from OU to all IU		300
Piping length from each Multikit to the IUs (*)		30
Height difference (Hi-o) between OU and IU (OU higher than the IU / OU lower then the IU)		50 / 40
Height difference (Hi) between IUs		15
Oil Trap every Ht meters of height		10(2)

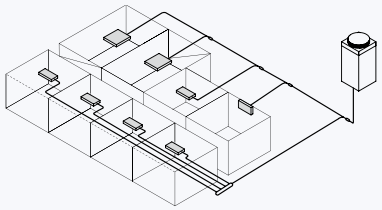

◆ Three Pipes System FXN(E)

(m)

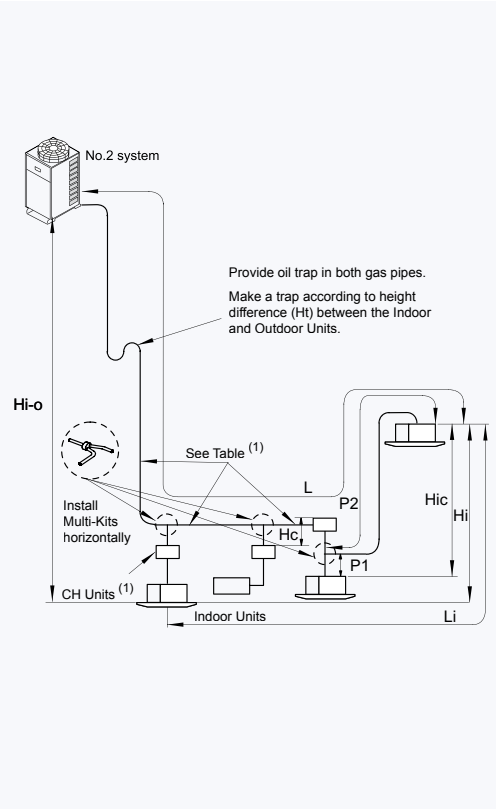

Item		Maximum Applicable Range FXN(E)
Length between OU and farthest IU (L)	Actual	150
	Equivalent	175
Piping length from 1st Multikit to the furthest IU (Li)		40
Total length from OU to all IU		300
Piping length from each Multikit to the IUs (*)		30
Height difference (Hi-o) between the OU and the IU (OU higher than the IU / OU lower than the IU)		50 / 40
Height difference (Hi) between IUs		15
Oil Trap every Ht meters of height		10(3)
Lift between IUs connected to same CH (Hic)		4
Difference of Piping lengths (P2-P1) between each IU and the same CH unit		5
Height Difference between CH units (Hc)		15

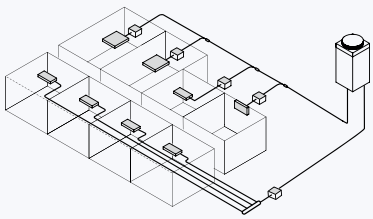

7

HITACHI
Inspire the Next

◆ Two Pipes System FSVNE

(m)

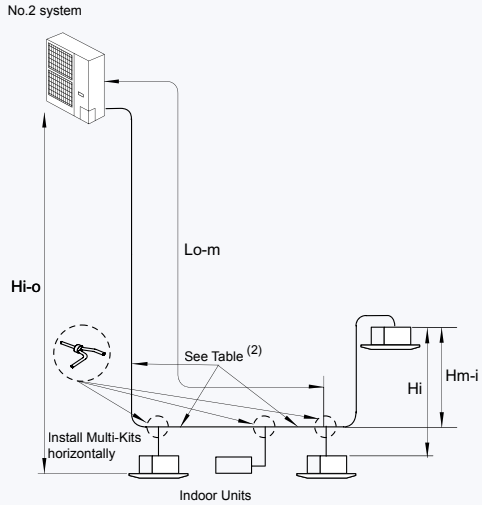

Item	Maximum Applicable Range FSVNE	
	3HP	4/5HP
Actual length from OU to the furthest Multikit (Lo-m)	Number of Indoor Units: 2 / 3 / 4 40 / 35 / 25	65
Total length from OU to all IU	65	135(1)
Piping length from each Multikit to the IUs (2)	10	
Height difference (Hi-o) between the OU and the IU (OU higher than the IU / OU lower than the IU)	25 / 25	
Height difference (Hi) between IUs	10	
Height difference between the Multikit and the IU (Hm-i)	5	

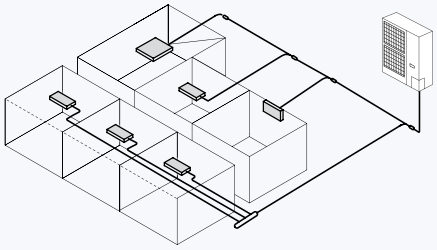

NOTES:

(1) If the piping length is >80 m you have to add 0.4 l of FVC68D type oil.

(2) See section 7.1.6 for additional information

OU: No.2 system

IU: Indoor Unit

7.1.3. Refrigerant Piping Length

The refrigerant piping between the Indoor Unit and the Outdoor Unit should be designed using the following chart.

Keep the design point within the dark area of the chart, which shows the applicable height difference according to piping length.

FSN(E)/FXN(E)

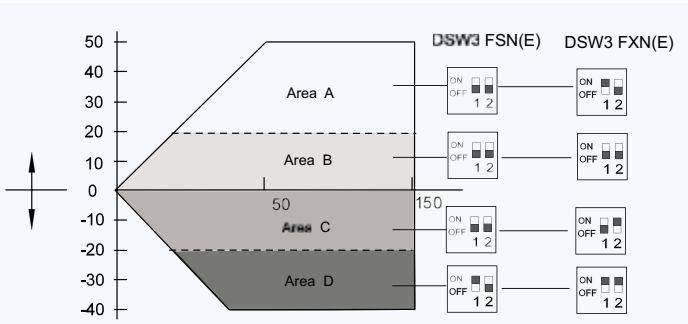

FSVN(E)

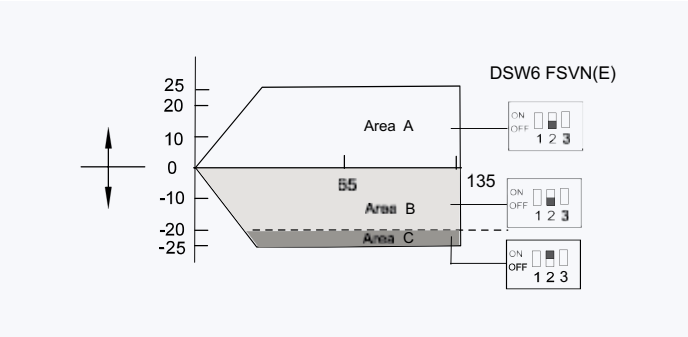

NOTES:

DSW: Dip Switch on Outdoor Unit PCB (DSW3 must be set when the Outdoor Unit is installed lower than Indoor Unit with height difference indicated and when longer piping is required).

The division lines are shown in the following diagrams.

CAUTION:

In case that the total piping length is long and the Outdoor Unit is installed lower than the Indoor Units by more than Height indication; perform the DSW setting correctly according to figures.

If the Outdoor Unit is installed lower than the Indoor Units by more than the Height indicated and it is outside of the area (Area B) shown in the figures, change the side of the main liquid piping and perform the DSW setting correctly according to the figures.

HITACHI
Inspire the Next

7.1.4. Piping Size and Multikits for FSN(E) System

In addition to the Epoch-making “Uni-Piping System”, where the same pipe size as the main refrigerant pipe can be used, the “Down-Pipe System” is also available for piping cost reduction.

As shown in the following table, the “Unpiping” system is not available for 12~32 HP machines.

Piping systems		
No.2 system	Uni-Piping	Down-Size
RAS-5FSN	●	-
RAS-8FSNE(E)	●	●
RAS-10FSNE(E)	●	●
RAS-12FSNE	✕	●
RAS-14FSNE	✕	●
RAS-16FSN	✕	●
RAS-18FSN	✕	●
RAS-20FSN	✕	●
RAS-22FSN	✕	●
RAS-24FSN	✕	●
RAS-26FSN	✕	●
RAS-28FSN	✕	●
RAS-30FSN	✕	●
RAS-32FSN	✕	●

● Available
✕ Not Available

NOTES:

In the case of the Uni-Piping system, the size of the piping and the multikit from the Outdoor unit to the last Multi-Kit are the same.

If the size of the multikit after the 2nd kit is bigger than the 1st one, use the Multi-kit with the same size as the 1st Multi-kit.

In case that the pipe size after the 1st multikit is bigger than the pipe size between the Outdoor Unit and the 1st multikit, use the pipe with the same size as the pipe size between the Outdoor Unit and the 1st multikit.

If you want to use the “Unpiping” system for other configurations that are not shown in the table, consult with your distributor.

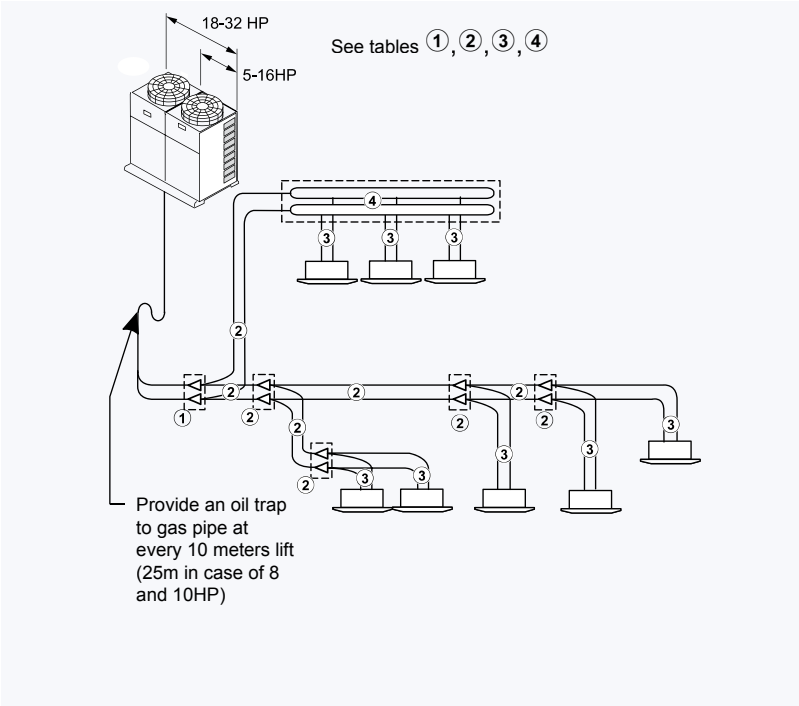

7

Table 1:

◆ **Table ①: Outdoor unit ~ 1st Multikit**

If the equivalent piping length is **less** than 100 m, use the following pipe size:

No.2 system	Pipe Size (Ø mm)		Multikit
	Gas	Liquid	
RAS-5FSN	15.88	9.53	E-102SN
RAS-8FSN(E)	19.05	9.53	E-102SN
RAS-10FSN(E)	22.20	9.53	E-102SN
RAS-12FSNE	25.40	12.70	E-162SN
RAS-14FSN	25.40	12.70	E-162SN
RAS-16FSN	28.60	12.70	E-162SN
RAS-18FSN	28.60	15.88	E-242SN
RAS-20FSN	28.60	15.88	E-242SN
RAS-22FSN	28.60	15.88	E-242SN
RAS-24FSN	28.60	15.88	E-242SN
RAS-26FSN	31.75 (34.92)	19.05	E-302SN
RAS-28FSN	31.75 (34.92)	19.05	E-302SN
RAS-30FSN	31.75 (34.92)	19.05	E-302SN
RAS-32FSN	31.75 (34.92)	19.05	E-302SN

If the equivalent piping length is **greater** than 100 m, use the larger sized pipe:

No.2 system	Pipe Size (Ø mm)		Multi-Kit
	Gas	Liquid	
RAS-5FSN	19.05	12.70	E-102SN
RAS-8FSN(E)	22.20	12.70	E-102SN
RAS-10FSN(E)	25.40 (28.60)	12.70	E-162SN
RAS-12FSN	28.60	15.88	E-242SN
RAS-14FSN	28.60	15.88	E-242SN
RAS-16FSN	31.75 (34.92)	15.88	E-302SN
RAS-18FSN	31.75 (34.92)	19.05	E-302SN
RAS-20FSN	31.75 (34.92)	19.05	E-302SN
RAS-22FSN	31.75 (34.92)	19.05	E-302SN
RAS-24FSN	31.75 (34.92)	19.05	E-302SN
RAS-26FSN	38.10 (41.27)	22.20	E-302SN
RAS-28FSN	38.10 (41.27)	22.20	E-302SN
RAS-30FSN	38.10 (41.27)	22.20	E-302SN
RAS-32FSN	38.10 (41.27)	22.20	E-302SN

The pipe size must be the same of the piping connection hole of the Outdoor Unit.

◆ **Table ②: 1st Multikit ~ Last Multikit**

Table 2:

Total Capacity of Indoor Units	Pipe Size (Ø mm)		Multi-Kit
	Gas	Liquid	
HP<6	15.88	9.53	E-102SN
6≤HP<9	19.05	9.53	E-102SN
9≤HP<13	22.20	9.53	E-102SN
13≤HP<16	25.40 (28.60)	12.70	E-162SN
16≤HP<18	28.60	12.70	E-162SN
18≤HP<26	28.60	15.88	E-242SN
26≤HP	31.75 (34.92)	19.05	E-302SN

The Multikit selected must be compatible with pipe selected in table (1).
See chapter 7.2 for more information.

Table 3:

◆ Table ③: Multikit ~ Indoor unit

Indoor unit capacity (HP)	Pipe Size (Ø mm)		Maximum Length of Liquid Pipe
	Gas	Liquid	
from 0.8 to 1.5	12.7	6.35*	15 m
2.0	15.88	6.35*	15 m
2.5 to 6.0	15.88	9.53	30 m
8.0	19.05	9.53	30 m
10.0	22.20	9.53	30 m

NOTES:

(*) In case that the liquid pipe for the Indoor Unit is longer than 15m, use the pipe with a diameter of ∅9.53.

The pipe size must be the same size of the piping connection hole of the I.U.

The pipe shown in table 3 is applicable for both: the line distributor and the distributor branch.

Table 4:

◆ Table ④: System by distributor

Applicable Model	Pipe Size (Ø mm)		Multi-Kit Model	
	Gas	Liquid	2~4 Outputs	2~8 Outputs
RAS-5FSN	15.88	9.53	E-84HSN	E-108HSN
RAS-8FSN(E)	19.05	9.53		
RAS-10FSN(E)	22.20	9.53	–	
RAS-12FSN(E)	25.40	12.70		
RAS-14FSNE	25.40	12.70		
RAS-16FSN	28.60	12.70		
RAS-18FSN	28.60	15.88		
RAS-20FSN	28.60	15.88		
RAS-22FSN	28.60	15.88		
RAS-24FSN	28.60	15.88		
RAS-26FSN	31.75 (34.92)	19.05		
RAS-28FSN	31.75 (34.92)	19.05		
RAS-30FSN	31.75 (34.92)	19.05		
RAS-32FSN	31.75 (34.92)	19.05		

HITACHI
Inspire the Next

7.1.5. Piping Size and Multikits for FXN(E) System

The “Down Pipe System” is the system used for the FXN(E) range.

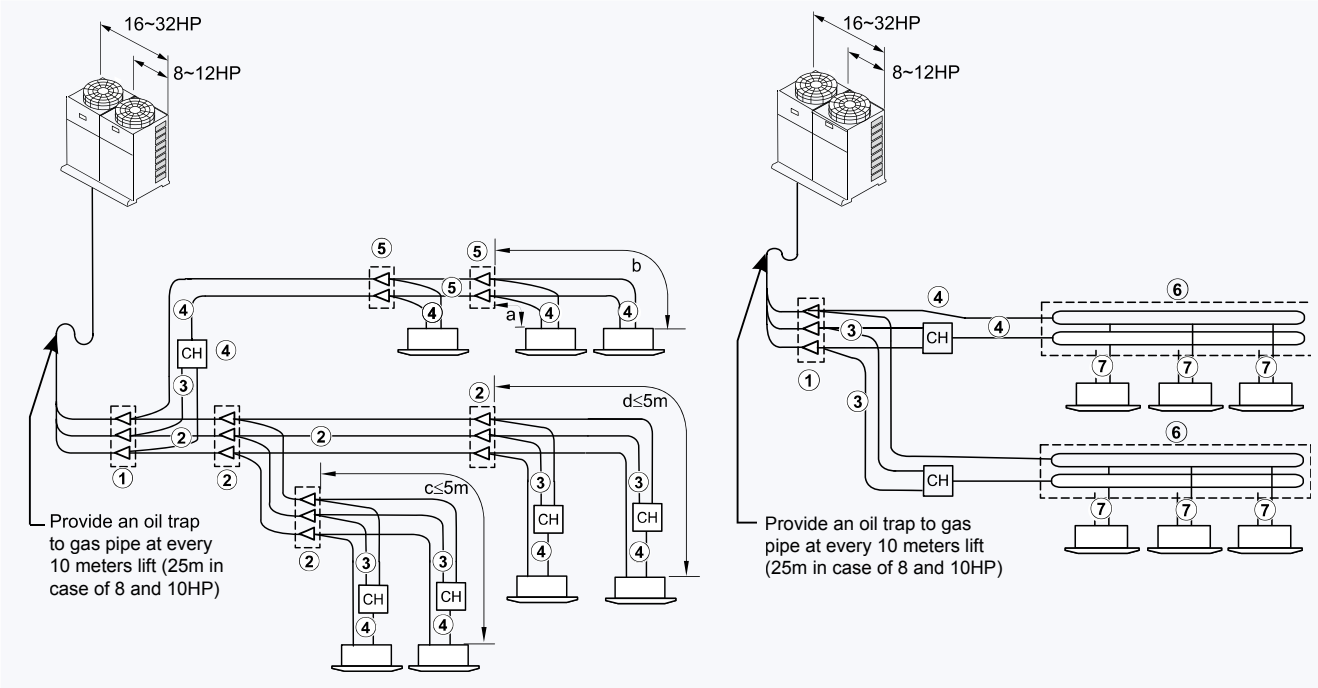

As shown in the following table, the “Unpiping” system is not availablefor FXN(E) machines.

Piping systems		
No.2 system	Uni-Piping	Down-Size
RAS-8FXN(E)	✗	●
RAS-10FXN(E)	✗	●
RAS-12FXNE	✗	●
RAS-16FXN	✗	●
RAS-18FXN	✗	●
RAS-20FXN	✗	●
RAS-22FXN	✗	●
RAS-24FXN	✗	●
RAS-26FXN	✗	●
RAS-30FXN	✗	●
RAS-32FXN	✗	●

● Available
✗ Not Available

Table 1:

◆ Table ①: 3 pipes part of Outdoor Unit ~ 1st Multikit

If the equivalent piping length is **less** than 100 m, use the following pipe size:

No.2 system	Pipe Size (Ø mm)			Multi-Kit
	Gas Low	Gas High	Liquid	
RAS-8FXN(E)	19.05	15.88	9.53	E-102XN
RAS-10FXN(E)	22.2	19.05	9.53	E-102XN
RAS-12FXNE	25.4	19.05	12.70	E-162XN
RAS-16FXN	28.6	22.2	12.70	E-162XN
RAS-18FXN	28.6	22.2	15.88	E-202XN
RAS-20FXN	28.6	22.2	15.88	E-202XN
RAS-22FXN	28.6	25.4	15.88	E-242XN
RAS-24FXN	28.6	25.4	15.88	E-242XN
RAS-26FXN	31.75	25.4	19.05	E-322XN
RAS-30FXN	31.75 (34.92)	28.6	19.05	E-322XN
RAS-32FXN	31.75 (34.92)	28.6	19.05	E-322XN

If the equivalent piping length is **greater** than 100 m, use the larger sized pipe:

No.2 system	Pipe Size (Ø mm)			Multi-Kit
	Gas Low	Gas High	Liquid	
RAS-8FXN(E)	22.2	19.05	12.70	E-102XN
RAS-10FXN(E)	25.4	22.2	12.70	E-102XN
RAS-12FXNE	28.6 (31.75)	22.2	12.70	E-162XN
RAS-16FXN	31.75 (34.92)	25.4 (28.6)	15.88	E-162XN
RAS-18FXN	31.75 (34.92)	25.4 (28.6)	15.88	E-322XN
RAS-20FXN	31.75 (34.92)	25.4 (28.6)	19.05	E-322XN
RAS-22FXN	31.75 (34.92)	28.6 (31.75)	19.05	E-322XN
RAS-24FXN	31.75 (34.92)	28.6 (31.75)	19.05	E-322XN
RAS-26FXN	38.10 (41.27)	28.6 (31.75)	22.2	E-322XN
RAS-30FXN	38.10 (41.27)	31.75 (34.92)	22.2	E-322XN
RAS-32FXN	38.10 (41.27)	31.75 (34.92)	22.2	E-322XN

Table 2:

◆ Table ②: 3 pipes part of 1st multikit ~ last multikit

Total Capacity of Indoor Units	Pipe Size (Ø mm)			Multi-Kit
	Gas Low	Gas High	Liquid	
HP<6	15.88	12.7	9.53	E-52XN
6≤HP<9	19.05	15.88	9.53	E-102XN
9≤HP<12	22.2	19.05	9.53	
12≤HP<16	25.4	22.2	12.7	E-162XN(*)
16≤HP<18	28.6	22.2	12.7	
18≤HP<22	28.6	22.2	15.88	E-202XN
22≤HP<26	28.6	25.4	15.88	E-242XN
26≤HP	31.75	28.6	19.05	E-322XN

NOTE:

(*) In case that E-162XN is connected to 0.8~2HP Indoor Units, use Ø9.53→Ø6.35 reducer (field supplied).

Table 3:

◆ Table ③: 3 pipes part of multikit ~ CH Unit

Total Capacity of Indoor Units	Pipe Size (Ø mm)		No.0 Group
	Gas Low	Gas High	
HP<4	15.88	12.7	CH-4.0NE
4≤HP<8	19.05	15.88	CH-8.0NE
8≤HP≤12	22.2	19.05	CH-12.0N

Table 4:

◆ Table ④: 2 pipes part of CH unit ~ 1st multikit

No.0 Group	Pipe Size (Ø mm)		Multikit
	Gas	Liquid	
CH-4.0NE	15.88	9.53	E-102SN
CH-8.0NE	19.05	9.53	
CH-12.0N	22.2	9.53	

Table 5:

◆ Table ⑤: 2 pipes part of multikit ~ last multikit

Total Capacity of Indoor Units	Pipe Size (Ø mm)		Multikit
	Gas	Liquid	
HP<6	15.88	9.53	E-102SN
6≤HP<9	19.05	9.53	
9≤HP<12	22.2	9.53	

Table 6:

◆ Table ⑥: 2 pipes part of distributor

Applicable Model	Pipe Size (Ø mm)		Multikit Model	
	Gas	Liquid	2~4 multikits	2~8 multikits
RAS-8FXN(E)	19.05	9.53	E-84HSN	E-108HSN
RAS-10FXN(E)	22.20	9.53		
RAS-12FXNE	25.40	12.70		
RAS-16FXN	28.60	12.70	–	
RAS-18FXN	28.60	15.88		
RAS-20FXN	28.60	15.88		
RAS-22FXN	28.60	15.88		
RAS-24FXN	28.60	15.88		
RAS-26FXN	31.75	19.05		
RAS-30FXN	31.75	19.05		
RAS-32FXN	31.75	19.05		

Table 7:

◆ Table ⑦: From the Multikit to the Indoor Unit

Indoor unit capacity (HP)	Pipe Size (Ø mm)		Max. Allowable Length
	Gas	Liquid	
from 0.8 to 1.5	12.7	6.35(*)	15 m
2.0	15.88	6.35(*)	15 m
2.5 to 6.0	15.88	9.53	30 m
8.0	19.05	9.53	30 m
10.0	22.20	9.53	30 m

NOTES:

(*) In case that the length of pipe to the Multi-Kit exceeds 15m with the Indoor Unit 1HP to 2HP, the size of the liquid pipe should be increased to Ø9.53 respectively. Use a field supplied reducer.

(**) If the total capacity connected to the CH-Unit is 4.0 HP, the maximum capacity that the indoor unit can provide diminishes 5% in cooling mode and 10% in heating mode.

(***) If the total capacity connected to the CH-Unit is 8.0 HP, the maximum capacity that the indoor unit can provide diminishes 5% in cooling mode and 10% in heating mode.

7

Select the suitable CH-Unit by considering the following table.

Model	Indoor Unit Quantity	Total Indoor Capacity (HP)
CH-4.0NE	from 1 to 5	HP≤4 (**)
CH-8.0NE	from 1 to 8	4≤HP≤8(***)
CH-12.0N	from 1 to 5	8≤HP≤12

The piping shown in the previous table can apply to the multikit as well as to the distributor.

In the bypass of the piping, the length of the pipe between the terminal branch (farthest from the O.U.) of three pipes (specified in the figure as “c” and “d”) and the Indoor Unit must be less than 5 m; if it is longer than 5 m use a T bypass in the 3 pipe part of the liquid piping, as shown below.

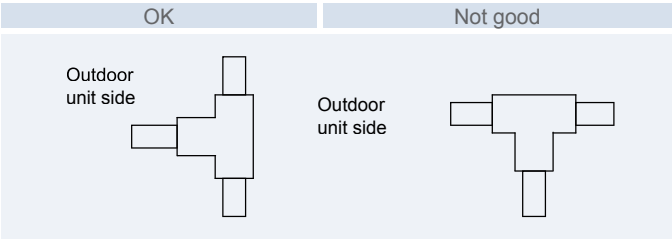

7.1.6. Piping Size and Multikit for FVSNE System

The "Uni-Piping System" is used for FSVNE units. This system uses the same pipe size as the main refrigerant pipe.

Available
Not Available

Piping systems	
No.2 system	Uni-Piping
RAS-3~5FSVNE	●

NOTES:

For FSVNE units, the pipe size and the Multi-Kit from the Outdoor Unit to the last Multikit is the same.

If the size of the multikit after the 2nd kit is bigger than the 1st one, use the multikit with the same size as the 1st Multi-kit.

In case that the pipe size after the 1st multikit is bigger than the pipe size between the Outdoor Unit and the 1st multikit, use the pipe with the same size as the pipe size between the Outdoor Unit and the 1st multikit.

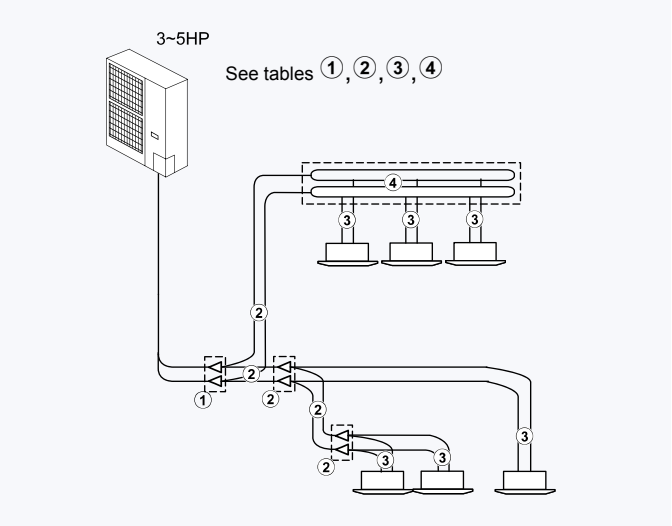

Table 1:

◆ **Table ①: Outdoor unit ~ 1st Multikit**

No.2 system	Pipe Size (Ø mm)		Multikit
	Gas	Liquid	
RAS-3~5FSVNE	15.88	9.53	E-102SN

The pipe size must be the same of the piping connection hole of the Outdoor Unit.

Table 2:

◆ **Table ②: 1st Multikit ~ Last bypass**

Total Capacity of Indoor Units	Pipe Size (Ø mm)		Multikit
	Gas	Liquid	
HP<5.99	15.88	9.53	E-102SN

Table 3:

◆ **Table ③: Multikit ~ Indoor unit**

Indoor unit capacity (HP)	Pipe Size (Ø mm)		Maximum Length of Liquid Pipe
	Gas	Liquid	
from 0.8 to 1.5	12.70	6.35*	10 m
2.0	15.88	6.35*	10 m
2.5 to 5.0	15.88	9.53	10 m

The pipe size must be the same size of the piping connection hole of the I.U.

Table 4:

◆ **Table ④: Distributor**

Applicable Model	Pipe Size (Ø mm)		Multikit Model	
	Gas	Liquid	2~4 Branches	2~8 Branches
RAS-3~5FSVNE	15.88	9.53	E-84HSN	E-108HSN

NOTE:

The piping shown in the previous table can apply to the multikit as well as to the distributor.

7.2. Multikits and Distributors

7.2.1. Dimensional Data

◆ **Multikit for FSN(E)**

	GAS PIPING	LIQUID PIPING
E-102SN	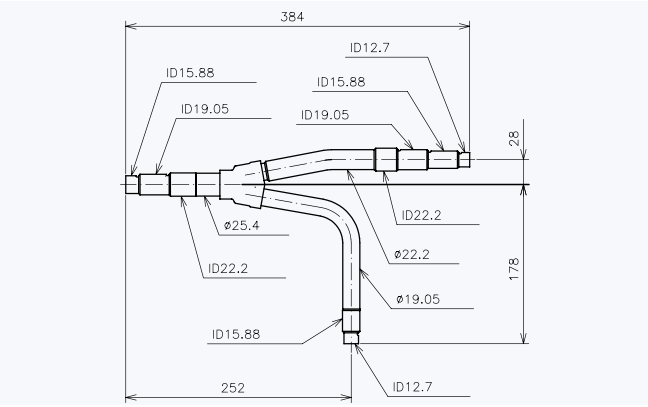	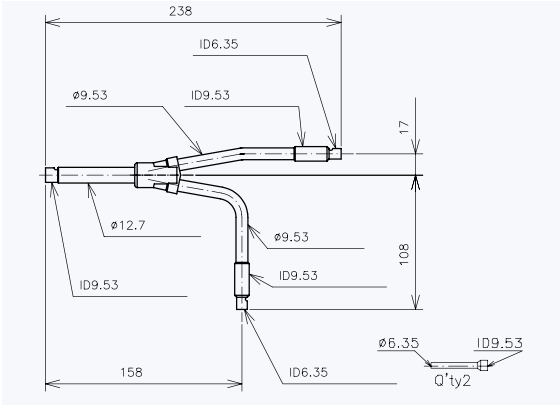
E-162SN	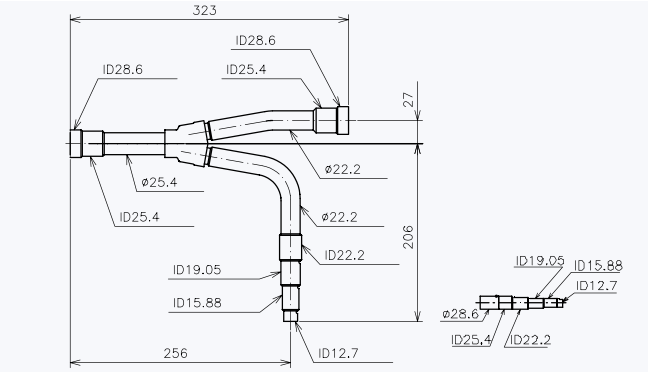	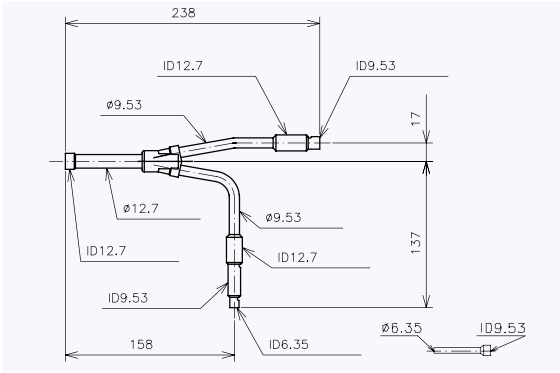
E-242SN	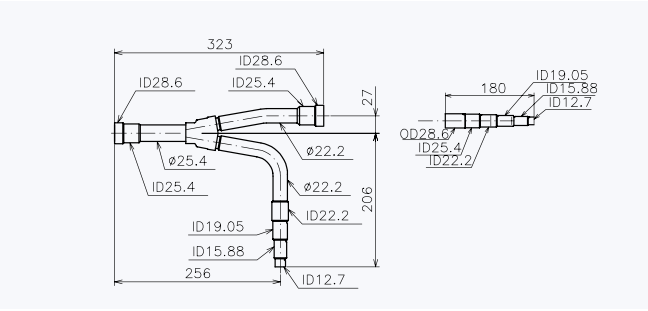	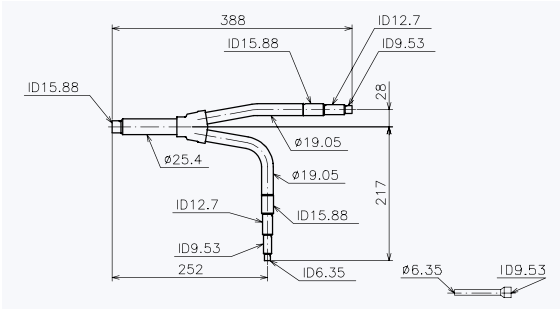
E-302SN	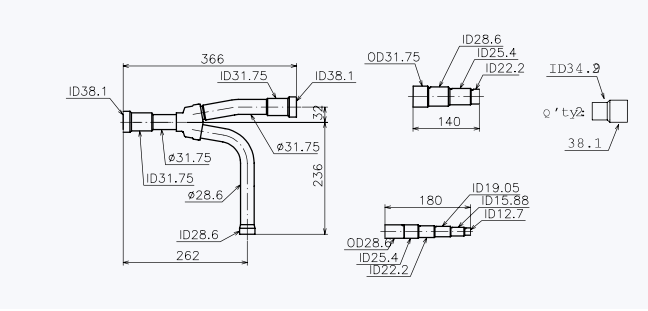	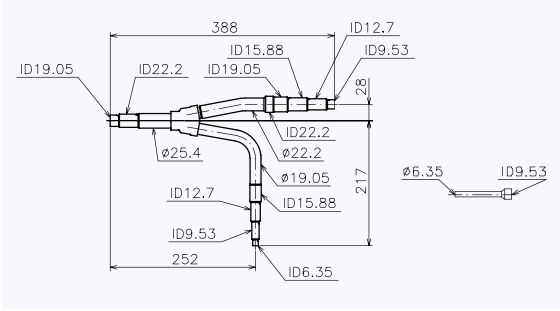

7

HITACHI
Inspire the Next

◆ **Multikit for FXN(E)**

	E-52XN	E-102XN
GAS LINE (LOW)	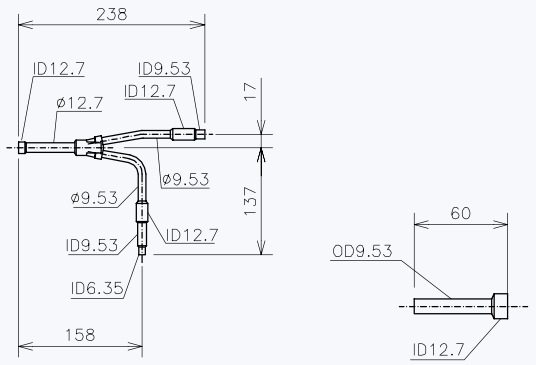	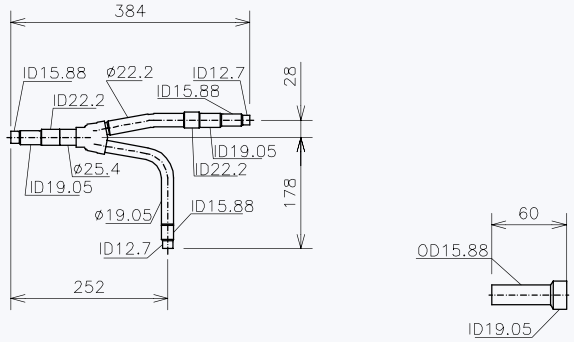
GAS LINE (HIGH)	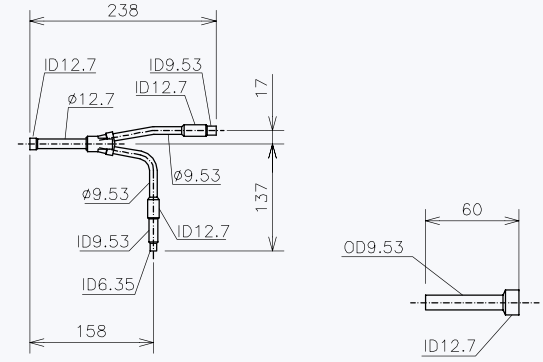	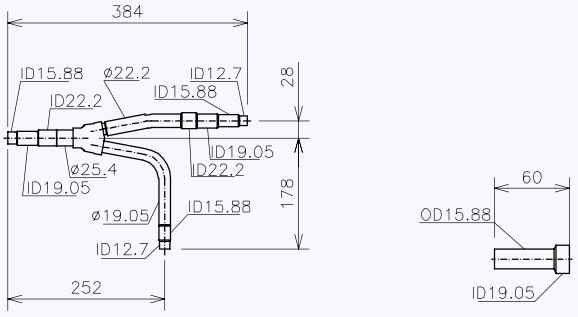
LIQUID PIPING	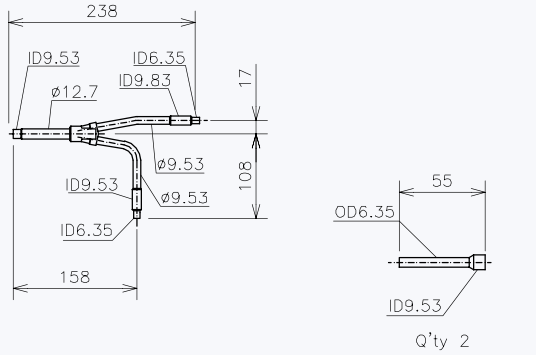	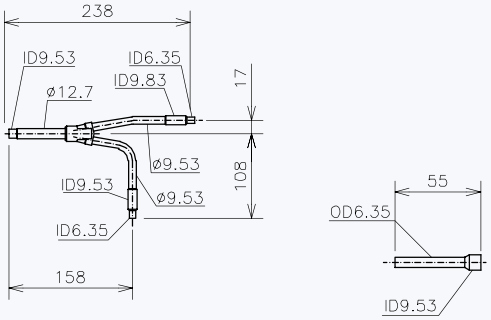

◆ **Multikit for FXN(E) (cont.)**

	E-162XN	E-202XN
GAS LINE (LOW)	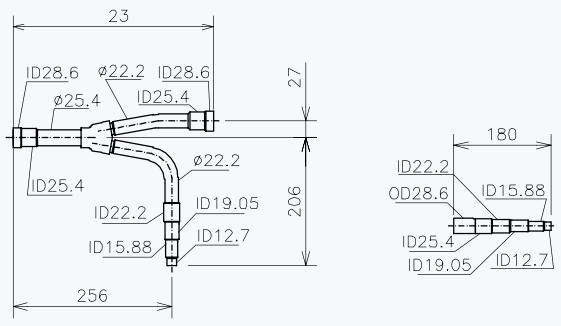	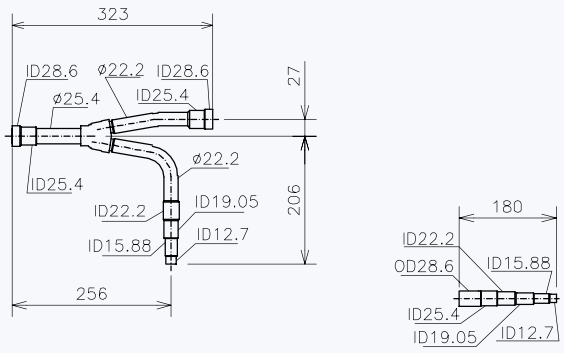
GAS LINE (HIGH)	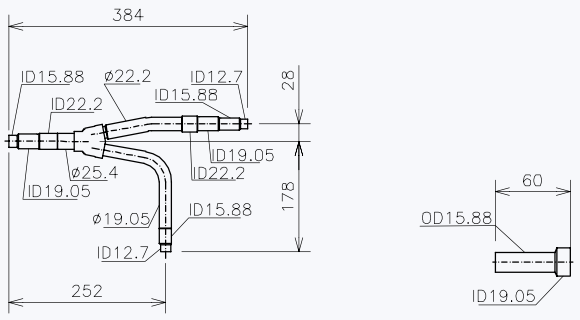	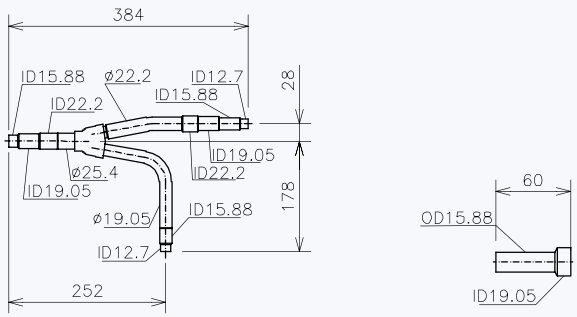
LIQUID PIPING	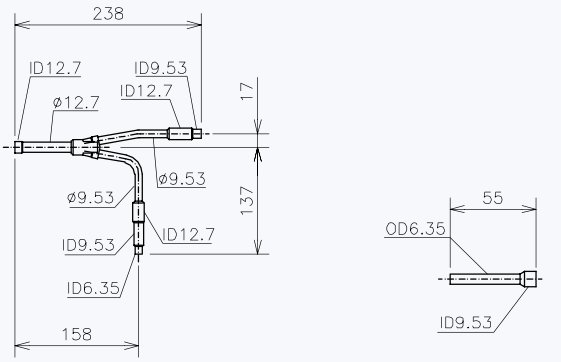	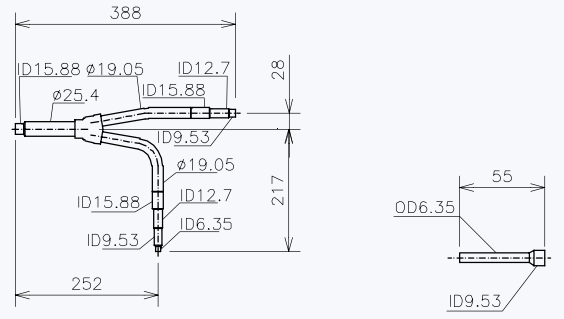

7

◆ **Multikit for FXN(E) (cont.)**

	E-242XN	E-322XN
GAS LINE (LOW)	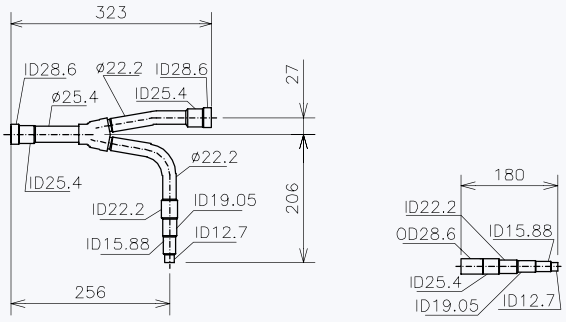	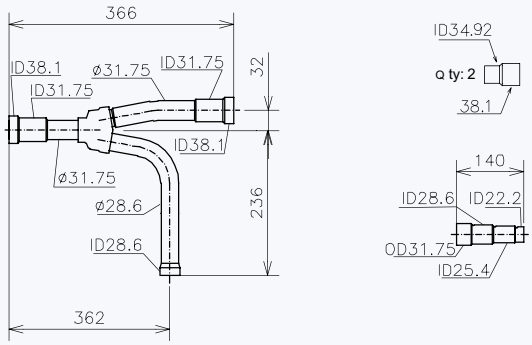
GAS LINE (HIGH)	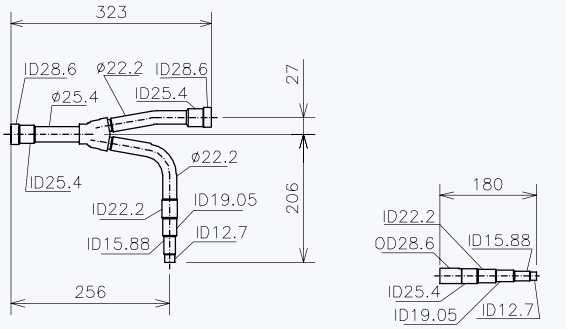	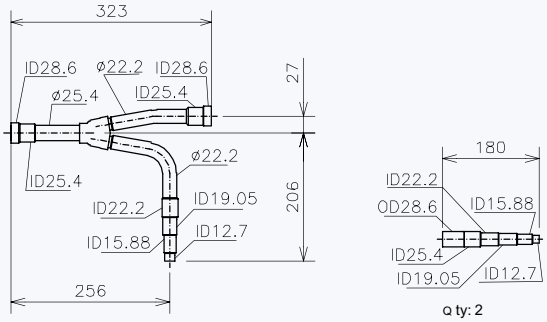
LIQUID PIPING	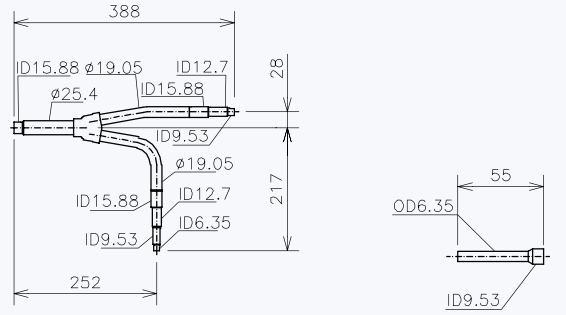	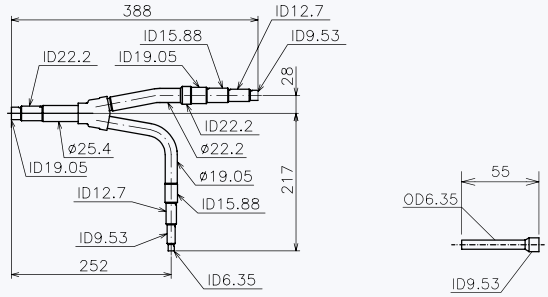

◆ **Distributor for FSN(E) and FXN(E)**

	GAS PIPING	LIQUID PIPING
E-84HSN	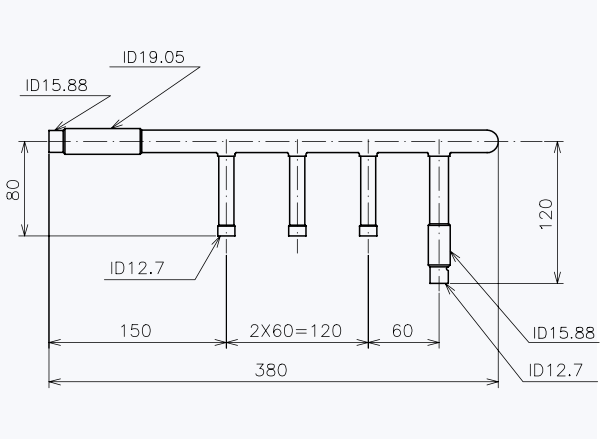	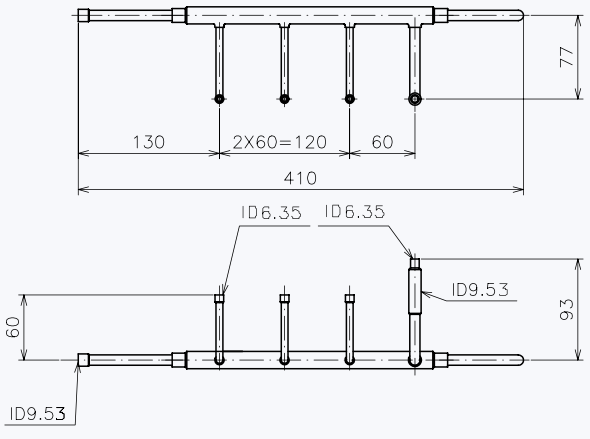
E-108HSN	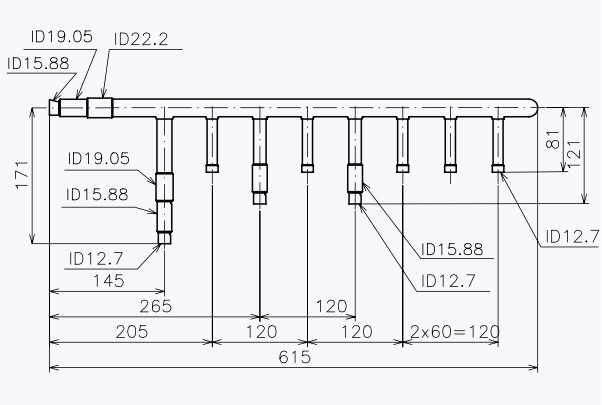	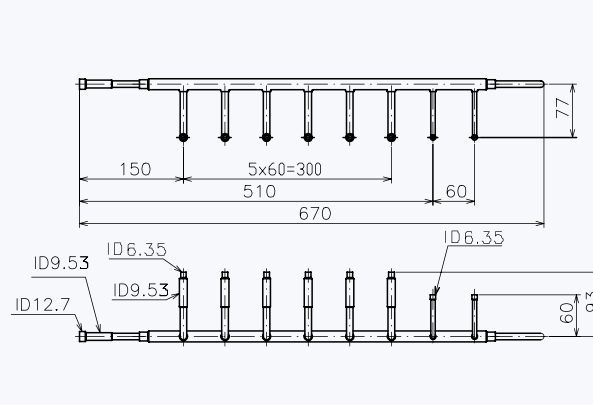

◆ **Multikit for FSVNE**

	GAS PIPING	LIQUID PIPING
E-102SN	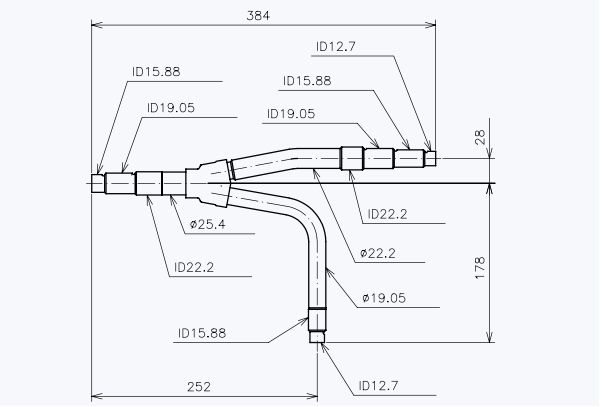	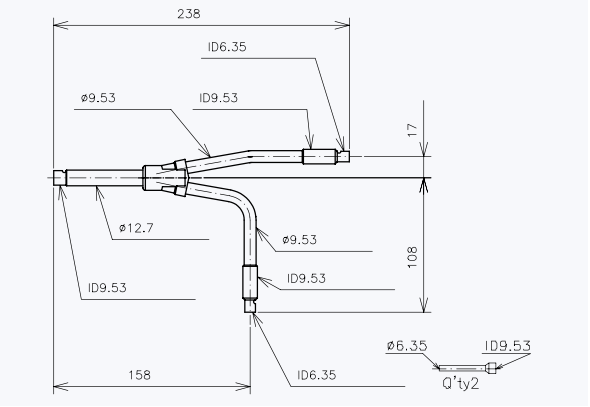

7

◆ Distributor for FSVNE

	GAS PIPING	LIQUID PIPING
E-84HSN	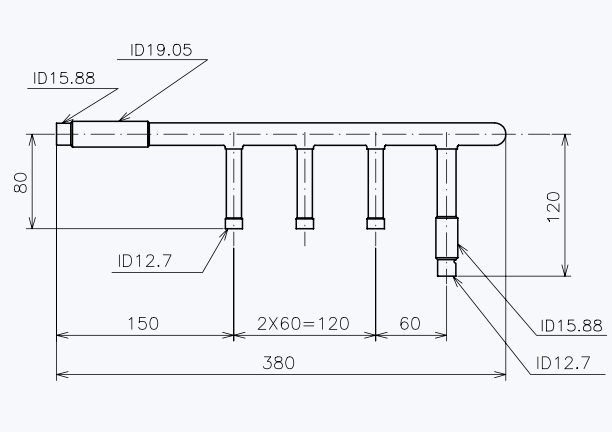	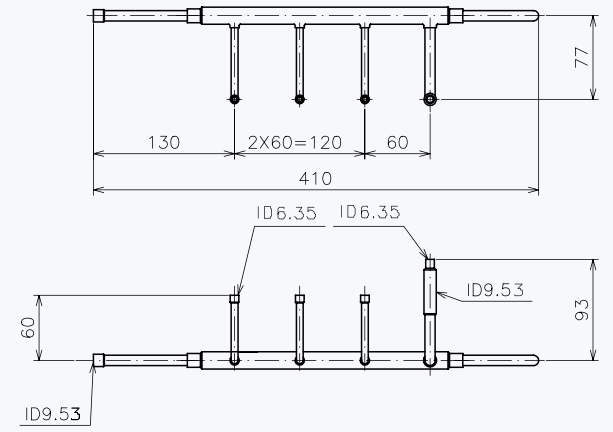
E-108HSN	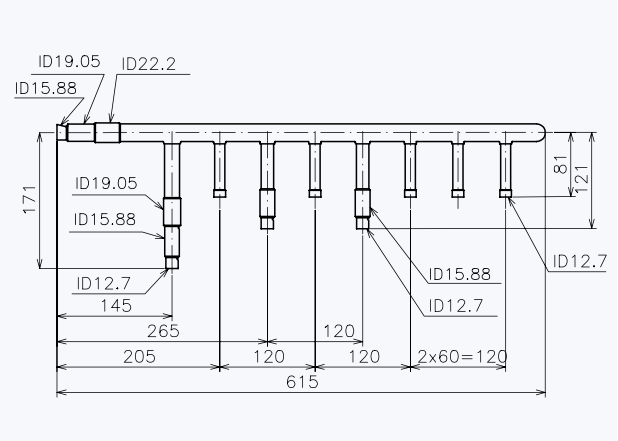	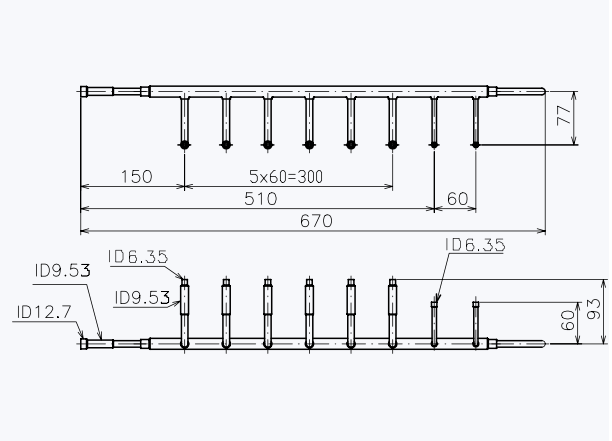

7.2.2. Distribution Method

Distribution Multikit

Multikit

With the line distribution method, it is possible to make the first or the second main pipe distribution within the third branch. And do not make the main pipe distribution, at or after the fourth branch.

Method 1:

Bypass method in the 2nd multikit

Correct (More adequate distribution)	Not good

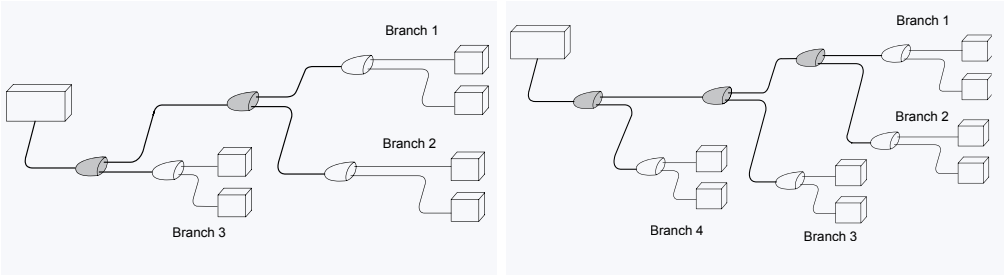

Method 2:

Bypass method in the 3rd multikit

Correct (Distribution allowed)	Not good

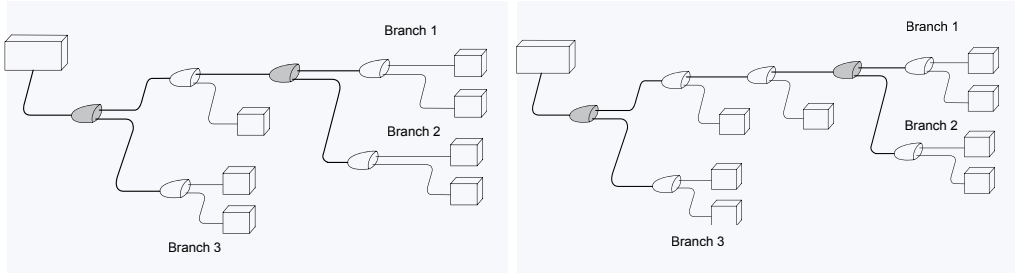

(Main Pipe Distribution: distribution from one Multikit to two kits)

Distributor

Distributor

Bypass method

OK	Not good

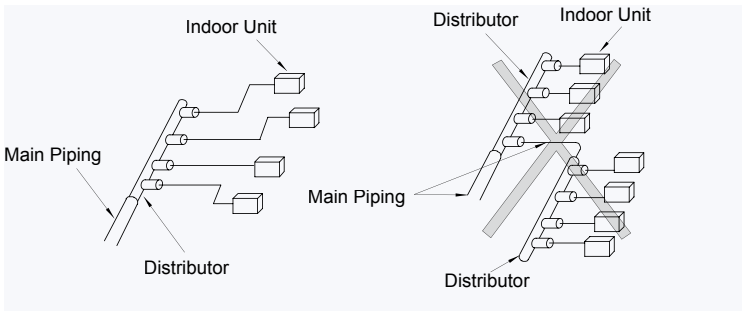

NOTE:

Do not connect two distributors consecutively.

7

☛ Installation position:

◈ Installation Position

Horizontal	To Outoor Unit
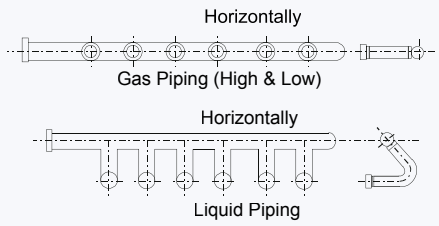	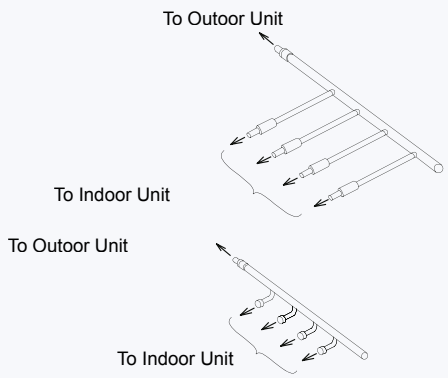

NOTE:

Install the connector horizontally.

CAUTION:

Seal the end of the distributor that is not connected, by brazing the factory-supplied closing pipes.

☛ **Combination of branches:**

◆ Combination of multikits

It is possible to connect the input of a distributor to a chain of multikits (up to the second of multikit).

OK

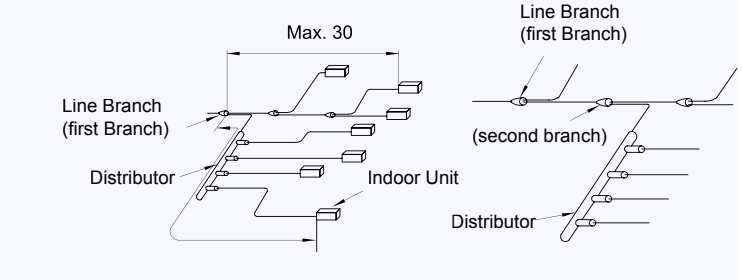

Not good

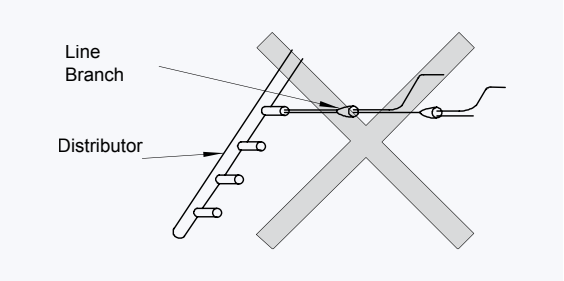

NOTE:

Do not connect a multikit to a distributor outlet.

☛ Installation position:

NOTE:

Locate the branch pipes on the same horizontal plane.

Make the straight length a minimum of 0.5m after the vertical bend.

◈ Installation Position

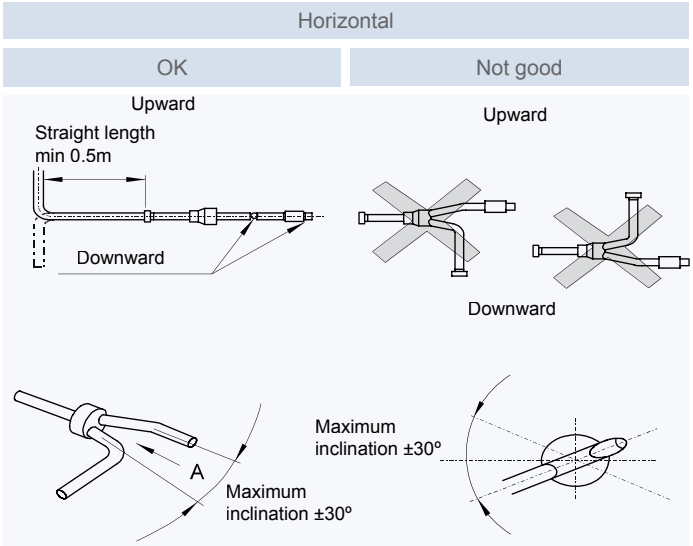

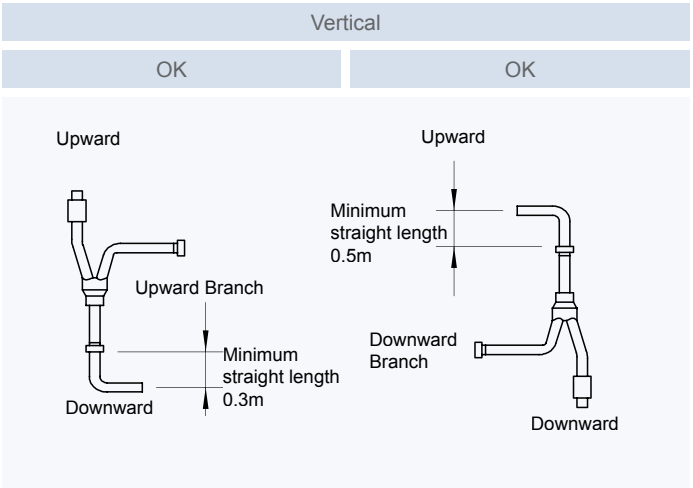

7

7.2.3. Piping Materials

1. Prepare locally-supplied copper pipes.
2. Select the pipe size with adequate thickness and material. Use the table below to select the required pipe.

NOTE:

If copper pipe is used for piping bigger than Ø19.05 flaring work can not be performed. If necessary, use a Joint Adapter.

Nominal Diameter (mm)	Nominal Diameter (in)	Thickness (mm)	Cooper type
6.35	1/4	0.80	Roll
9.53	3/8	0.80	Roll
12.70	1/2	0.80	Pipe/Roll
15.88	5/8	1.00	Roll
19.05	3/4	1.00	Pipe/Roll
22.23	7/8	1.00	Pipe/Roll
25.40	1	1.00	Pipel
28.60	1 1/8	1.25	Pipel
34.93	1 3/8	1.25	Pipel
41.28	1 5/8	1.25	Pipel

3. Select clean copper pipes. Make sure there is not dust and moisture inside. Blow the inside of the pipes with oxygen free nitrogen to remove any dust and foreign materials before connecting pipes.
4. After connecting the refrigerant piping, seal the open space between Knockout hole and refrigerant pipes by using insulation material as shown bellow:

CAUTION:

Do not use a saw and a grindstone or others which cause copper powder.

When cutting pipes, secure the part for brazing as shown in chapter 2 of the Service Manual (SMES0032)

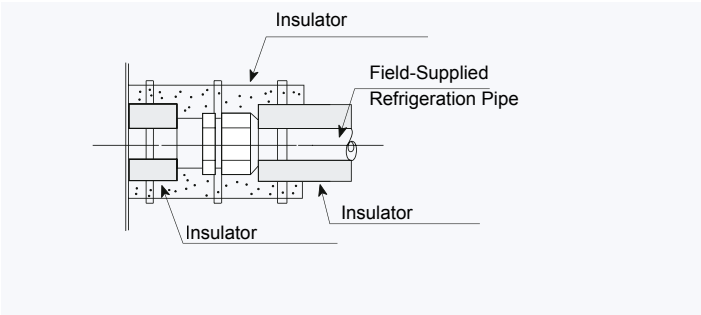

HITACHI
Inspire the Next

Piping connections

When connecting liquid piping for the unit where the piping is longer than 15 meters, apply a piping size of Ø9.53. Fix the connecting pipe as shown in the following figure. Utilize the insulation attached to the Indoor Unit

NOTE:

A system with no moisture or oil contamination will give maximum performance and lifecycle compared to that of a poorly prepared system.

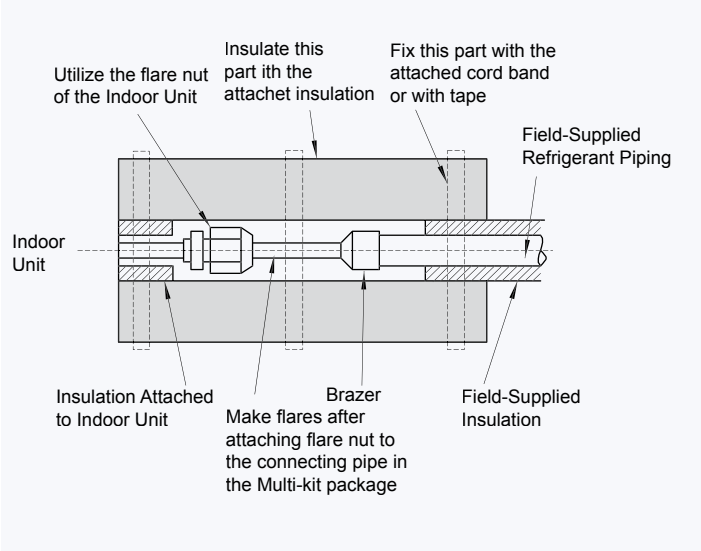

CAUTION:

- Cap the end of the pipe when the pipe is to be inserted through a hole.
- Do not put pipes on the ground directly without a cap or vinyl tape at the end of the pipe.

OK	Not good
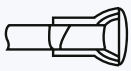	

- If piping installation is not completed until next day or over a longer period of time, braze off the ends of the piping and charge with oxygen free nitrogen through a Schrader valve type access fitting to prevent moisture and particle contamination.
- Do not use insulation material that contents NH3 because can damage cooper pipe material and can be a source of future leakage.

7

NOTE:

When polyethylene foam is applied, a thickness of 10mm for the liquid piping and from 15mm to 20mm for the gas piping is recommended.

CAUTION:

Perform insulation work after the surface temperature decreases to the room temperature, If not, insulation material may melt.
If the ends of the piping system are open after accomplishing piping work, securely attach caps or vinyl bags to the ends of the piping, avoiding the invasion of moisture and dust.

◆ **Insulation**

Attach insulation packet with the Multi-kit to each branch utilizing vinyl tape. Also attach insulation to field supplied piping for prevention of the capacity decrease according to the ambient air conditions and dewing on the pipe surface by the low pressure.

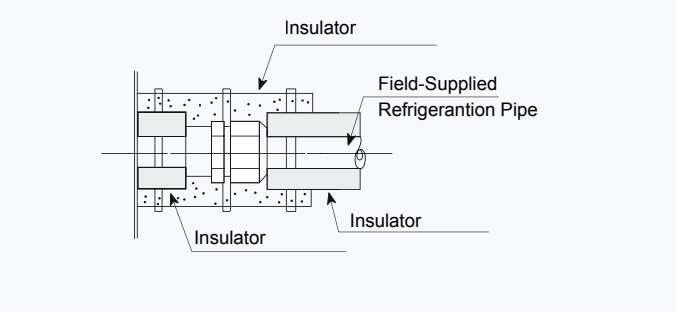

7.3. Refrigerant Charging Quantity

7.3.1. Guide of Additional Refrigerant Charge Calculation (R410A)

Although refrigerant has been charged into this unit, it is required that additional refrigerant should be charged according to piping length and Indoor Units.

A. Determine an additional refrigerant quantity to the following procedure, and charge it into the system.

B. Record the additional refrigerant quantity to facilitate service activities thereafter.

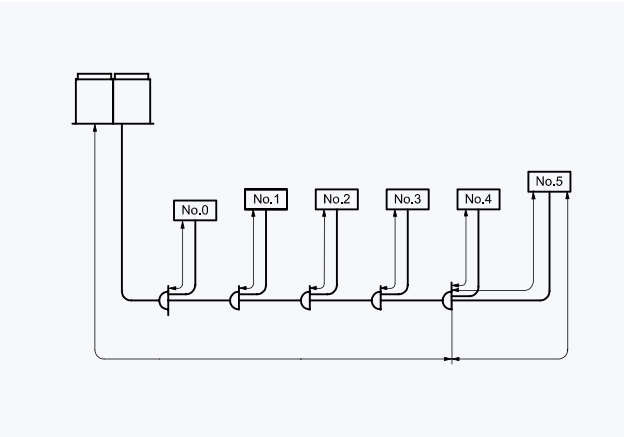

Charge Calculation Refrigerant:

Step 1:

Calculation Method of Additional Refrigerant Charge (W Kg)

Calculate the amount of additional refrigerant charge according to the method in steps 1.1 to 1.2:

1.1.Calculation of the additional refrigerant charge for liquid piping (W_1 kg)

(Fill in the following table)

Piper Diameter (mm)	Total Pipe Length (m)	Additional Charge (Kg/m)	Sub Total (Kg)
22.2		0.390	
19.05		0.280	
15.88		0.190	
12.7		0.120	
9.53		0.07	
6.35		0.03	
Quantity of additional refrigerant charge for liquid piping (W_1) = kg			

1.2. W_0 is the Outdoor Unit refrigerant charge before shipment

FSN Outdoor unit	Outdoor Unit Ref. Charge W_o (Kg)
RAS-5FSN	5.4
RAS-8FSN(E)	8.5
RAS-10FSN(E)	9.5
RAS-12FSN(E)	10.0
RAS-14FSN	13.0
RAS-16FSN	13.0
RAS-18FSN	18.0
RAS-20FSN	19.0
RAS-22FSN	19.0
RAS-24FSN	23.0
RAS-26FSN	24.0
RAS-28FSN	25.0
RAS-30FSN	26.0
RAS-32FSN	26.0

FXN Outdoor unit	Outdoor Unit Ref. Charge W_o (Kg)
RAS-8FXN(E)	8.5
RAS-10FXN(E)	9.5
RAS-12FXN(E)	10.0
RAS-16FXN	19.0
RAS-18FXN	19.0
RAS-20FXN	19.0
RAS-22FXN	19.0
RAS-24FXN	26.0
RAS-26FXN	26.0
RAS-30FXN	26.0
RAS-32FXN	26.0

FSVNE Outdoor unit	Outdoor Unit Ref. Charge W_o (Kg)
RAS-3FSVNE	1.75
RAS-4FSVNE	2.8
RAS-5FSVNE	3

1.3.Refrigerant charge of the indoor units that need additional charge

Horse Power	W_2 Add. Charge (Kg)
0.8~6.0	0
8.0-10.0	1.0

☛ Step 2:

2 Calculation of Total Additional Charge Amount (W kg). Enter weights W_1 and W_2 calculated in points 1.1 and 1.3 into the following formula.

Total quantity of additional charge $W = W_1 + W_2$

– Load Up

Charge Refrigerant (R410A) into the system according to the instructions described in the “Service Manual”

–Record of Additional Charge

Record the Refrigerant Charge quantity in order to facilitate maintenance and servicing activities.

Total refrigerant charge of this system is calculated in the following formula.

This System:	W=		+		=	Kg

Total Additional Charge W					
Total refrigerant charge of this system					
Date of Ref. Charge Work					
Year		Month		Day	

Total refrigerant charge of this system =	W_0	+	W		
This System =		+		=	Kg

7.3.2. Samples

◆ **Total System of SET-FREE (FSN series)**

ITEM		MULTIKIT SYSTEM
Example of Systems This figure shows examples of 6 Indoor Units combined with one Outdoor Unit. The refrigerant pipes are shown as single line in the diagrams. However, liquid line and gas line piping are required in the field. *NOTE:* Plan for an oil trap device for the gas piping at every Ht meters lift. (Ht is indicated in section 7.1.)		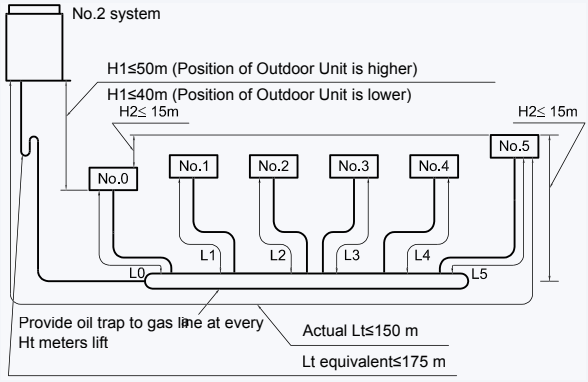
Maximum Piping Length	Actual Length	Lt ≤ 150 m
	Equivalent Length	Lt ≤ 175 m
Maximum Lift between Outdoor and Indoor Unit	In the case that the position of Outdoor Unit is higher than that of Indoor Unit.	H1 ≤ 50 m
	In the case that the position of Outdoor Unit is lower than that of Indoor Unit.	H1 ≤ 40 m
Maximum height between each indoor unit, or between an indoor unit and the multikit		H2 ≤ 15 m
Maximum piping length between the multikit and the indoor unit	Between the "a" kit and the farthest Indoor Unit	L ≤ 40 m
	Between Each Multi-Kit and Each Indoor Unit	L0, L1, L2, L3, L4, L5 ≤ 30 m
Choosing the distributor	RAS-14/16FSN	Use E-108HSN.
	RAS-10/12FSN(E)	Use E-108HSN.
	RAS-8FSN(E)	Use E-108HSN.
	RAS-5FSN	Use E-108HSN.

Quaintly of Additional Refrigerant Charge

The quantity is calculated by the following equation:

$W (Kg) = W_{11}+W_{12}+W_{13}+W_{14}+W_{15}+W_2$

1) W_{11} (kg): (Total length (m) of Ø19.05 liquid piping) x 0.28
W_{12} (kg): (Total length (m) of Ø15.88 liquid piping) x 0.190
W_{13} (kg): (Total length (m) of Ø12.7 liquid piping) x 0.120
W_{14} (kg): (Total length (m) of Ø9.53 liquid piping) x 0.070
W_{15} (kg): (Total Length (m) of Ø6.35 Liquid Piping) x 0.030

2) W_2 (Kg)
Total quantity of additional refrigerant of each indoor unit (kg)

Liquid Piping

Example: For RAS-5FSN

Mark	Lt-L5	L0	L1	L2	L3	L4	L5
Size	Ø9.53	Ø6.35	Ø6.35	Ø6.35	Ø6.35	Ø6.35	Ø6.35
Length	61	5	3	5	3	5	3

W_{14} = 61 x 0.07 = 4.27

W_{15} = (5+3+5+3+5+3) x 0.03 = 0.72

Indoor Unit

Example: For RAS-5FSN

Indoor Unit No.	0	1	2	3	4	5
Corresponding power (HP)	1	1	2	2	2	2
Additional refrigerant Quantity	Indoor units that do not require ref. charge					

W_2 = 0

Total

$W (kg) = W_{11}+W_{12}+W_{13}+W_{14}+W_{15}+W_2$

= 0 + 0 + 0 + 0 + 4.27 + 0.72 + 0 = 4.99 kg

7

ITEM	MULTIKIT UNI-PIPING SYSTEM
Example of Systems This figure shows examples of 6 Indoor Units combined with one Outdoor Unit. The refrigerant pipes are shown as a single line in the diagrams. However, liquid and gas line piping are required in the field. *NOTE:* Plan for an oil trap device for the gas piping at every Ht meters lift. (Ht is indicated in section 7.1.1.)	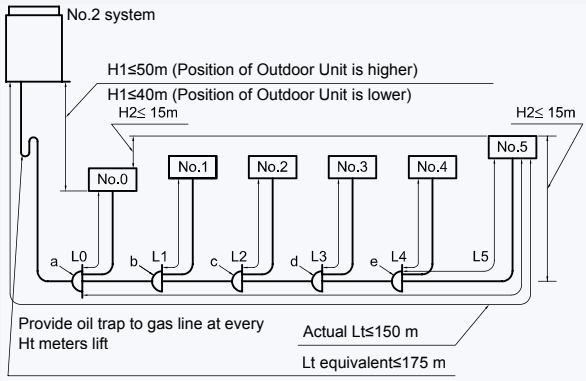

Maximum Piping Length	Actual Length	Lt ≤ 150 m
	Equivalent Length	Lt ≤ 175 m
Maximum Lift between Outdoor and Indoor Unit	In the case that the position of Outdoor Unit is higher than that of Indoor Unit.	H1 ≤ 50 m
	In the case that the position of Outdoor Unit is lower than that of Indoor Unit.	H1 ≤ 40 m
Maximum height between each indoor unit, or between an indoor unit and the multikit		H2 ≤ 15 m
Maximum piping length between the Multikit and the indoor unit	Between the “a” kit and the farthest Indoor Unit	L ≤ 40 m
	Between Each Multi-Kit and Each Indoor Unit	L0, L1, L2, L3, L4, L5 ≤ 30 m
Choosing each Multikit	RAS-10FSN(E)	Use E-102SN at “a,b,c,d and e”).
	RAS-8FSN(E)	Use E-102SN at “a,b,c,d and e”).
	RAS-5FSN	Use E-102SN at “a, b, c, d and e”).

Quantity of Additional Refrigerant Charge

The quantity is calculated by the following equation:

$W (Kg) = W_{11}+W_{12}+W_{13}+W_{14}+W_{15}+W_2$

1) W_{11} (kg): (Total length (m) of Ø19.05 liquid piping) x 0.28
   W_{12} (kg): (Total length (m) of Ø15.88 liquid piping) x 0.190
   W_{13} (kg): (Total length (m) of Ø12.7 liquid piping) x 0.120
   W_{14} (kg): (Total length (m) of Ø9.53 liquid piping) x 0.07
   W_{15} (kg): (Total Length (m) of Ø6.35 Liquid Piping) x 0.03
2) W_2 (Kg)
   Total quantity of additional refrigerant of each indoor unit (kg)

Liquid Piping

Example: For RAS-8FSN

Mark	Lt-L5	L0	L1	L2	L3	L4	L5
Size	Ø9.53	Ø6.35	Ø6.35	Ø6.35	Ø6.35	Ø6.35	Ø6.35
Length	51	5	3	5	3	5	3

W_{14} = 51 x 0.07 = 3.57

W_{15} = (5+3+5+3+5+3) x 0.03 = 0.72

Indoor Unit

Example: For RAS-8FSN

Indoor Unit No.	0	1	2	3	4	5
Corresponding power (HP)	1	1	2	2	2	2
Additional refrigerant Quantity	Indoor units that do not require ref. charge					

W_2 = 0

Total

$W (kg) = W_{11}+W_{12}+W_{13}+W_{14}+W_{15}+W_2$

= 0 + 0 + 0 + 0 + 3.57 + 0.72 + 0 = 4.29 kg

ITEM	DISTRIBUTOR AND MULTIKIT UNI-PIPING SYSTEM

Example of Systems

This figure shows examples of 6 Indoor Units combined with one Outdoor Unit.

The refrigerant pipes are shown as a single line in the diagrams.

However, liquid and gas line piping are required in the field.

NOTE:

Plan for an oil trap device for the gas piping at every Ht meters lift. (Ht is indicated in section 7.1.)

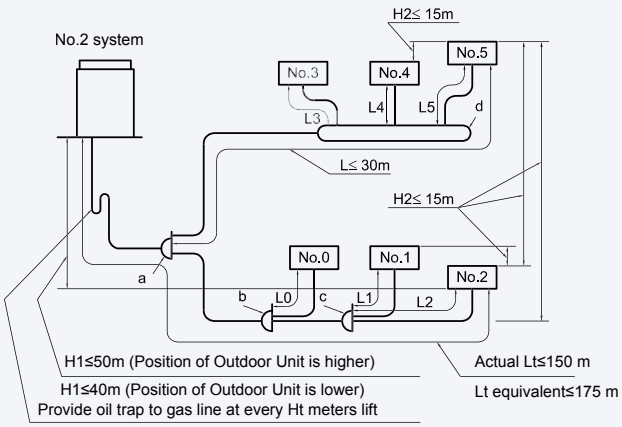

Maximum Piping Length	Actual Length	Lt ≤ 150 m
	Equivalent Length	Lt ≤ 175 m
Maximum Lift between Outdoor and Indoor Unit	In the case that the position of Outdoor Unit is higher than that of Indoor Unit.	H1 ≤ 50 m
	In the case that the position of Outdoor Unit is lower than that of Indoor Unit.	H1 ≤ 40 m
Maximum height between each indoor unit, or between an indoor unit and the multikit		H2 ≤ 15 m
Maximum piping length between the Multikit and the indoor unit	Between the “a” kit and the farthest Indoor Unit	L ≤ 40 m
	Between Each Multi-Kit and Each Indoor Unit	L0, L1, L2, L3, L4, L5 ≤ 30 m

	RAS-5/8FSN(E)	Use E-102SN at “a, b and c”, E-84HSN at “d”.
	RAS-10FSN(E)	Use E-102SN at “a, b and c”, E-108HSN at “d”.

Quantity of Additional Refrigerant Charge

The quantity is calculated by the following equation:

$W (Kg) = W_{11}+W_{12}+W_{13}+W_{14}+W_{15}+W_2$

1) W_{11} (kg): (Total length (m) of Ø19.05 liquid piping) x 0.28
   W_{12} (kg): (Total length (m) of Ø15.88 liquid piping) x 0.190
   W_{13} (kg): (Total length (m) of Ø12.7 liquid piping) x 0.120
   W_{14} (kg): (Total length (m) of Ø9.53 liquid piping) x 0.07
   W_{15} (kg): (Total Length (m) of Ø6.35 Liquid Piping) x 0.03

2) W_2 (Kg)
   Total quantity of additional refrigerant of each indoor unit (kg)

Liquid Piping

Example: For RAS-10FSN

Mark	Lt+L-(L2+L5)	L0	L1	L2	L3	L4	L5
Size	Ø9.54	Ø6.35	Ø6.35	Ø6.35	Ø6.35	Ø6.35	Ø6.35
Length	71	5	3	5	3	5	3

W_{14} = 71 x 0.07 = 4.97

W_{15} = (5+3+5+3+5+3) x 0.03 = 0.72

Indoor Unit

Example: For RAS-10FSN

Indoor Unit No.	0	1	2	3	4	5
Corresponding power (HP)	1	1	2	2	2	2
Additional refrigerant Quantity	Indoor units that do not require ref. charge					

In order from the smaller Indoor Unit

W_2 = 0

Total

$W (kg) = W_{11}+W_{12}+W_{13}+W_{14}+W_{15}+W_2$

= 0 + 0 + 0 + 0 + 4.97 + 0.72 + 0 = 5.69 kg

7

ITEM	MULTIKIT SYSTEM WITH REDUCTION
Example of Systems This figure shows examples of 6 Indoor Units combined with one Outdoor Unit. The refrigerant pipes are shown as a single line in the diagrams. However, liquid and gas line piping are required in the field. *NOTE:* Plan for an oil trap device for the gas piping at every Ht meters lift. (Ht is indicated in section 7.1.)	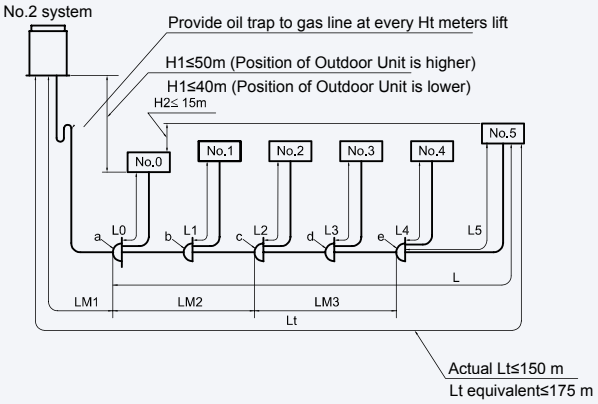

Maximum Piping Length	Actual Length	Lt ≤ 150 m
	Equivalent Length	Lt ≤ 175 m
Maximum Lift between Outdoor and Indoor Unit	In the case that the position of Outdoor Unit is higher than that of Indoor Unit.	H1 ≤ 50 m
	In the case that the position of Outdoor Unit is lower than that of Indoor Unit.	H1 ≤ 40 m
Maximum height between each indoor unit, or between an indoor unit and the multikit		H2 ≤ 15 m
Maximum piping length between the Multikit and the indoor unit	Between the “a” kit and the farthest Indoor Unit	L ≤ 40 m
	Between Each Multi-Kit and Each Indoor Unit	L0, L1, L2, L3, L4, L5 ≤ 30 m
Choosing each Multikit.	RAS-14/16FSN	Use E-162SN at a, b, and E-102SN at c, d, and e.

Quantity of Additional Refrigerant Charge

The quantity is calculated by the following equation:

$W (Kg) = W_{11}+W_{12}+W_{13}+W_{14}+W_{15}+W_2$

1) W_{11} (kg): (Total length (m) of Ø19.05 liquid piping) x 0.28
   W_{12} (kg): (Total length (m) of Ø15.88 liquid piping) x 0.190
   W_{13} (kg): (Total length (m) of Ø12.7 liquid piping) x 0.120
   W_{14} (kg): (Total length (m) of Ø9.53 liquid piping) x 0.07
   W_{15} (kg): (Total Length (m) of Ø6.35 Liquid Piping) x 0.03

2) W_2 (Kg)
   Total quantity of Additional Refrigerant of Each Indoor Unit (kg)

Liquid Piping

Example: For RAS-16FSN

Mark	LM1	LM2	LM3	L0	L1	L2	L3	L4	L5
Size	Ø12.7	Ø12.7	Ø9.53	Ø6.35	Ø6.35	Ø6.35	Ø6.35	Ø9.53	Ø9.53
Length	40	10	10	10	15	5	5	4	3

W_{13} = 50 x 0.120 = 6.0

W_{14} = (10+4+3) x 0.07 = 1.19; W_{15} = (10+15+5+5) x 0.03 = 1.05

Indoor Unit

Example: For RAS-16FSN

Indoor Unit No.	0	1	2	3	4	5
Corresponding power (HP)	2	2	2	2	4	4
Additional refrigerant Quantity	Indoor units that do not require ref. charge					

In order from the smaller Indoor Unit

W_2 = 0

Total

$W (kg) = W_{11}+W_{12}+W_{13}+W_{14}+W_{15}+W_2$

= 0 + 0 + 6 + 0 + 1.19 + 1.05 + 0 = 8.24 kg

ITEM	DOWN-SIZE DISTRIBUTOR AND MULTIKIT SYSTEM WITH REDUCTION

Example of Systems

This figure shows examples of 6 Indoor Units combined with one Outdoor Unit.

The refrigerant pipes are shown as a single line in the diagrams.

However, liquid and gas line piping are required in the field.

NOTE:

Plan for an oil trap device for the gas piping at every Ht meters lift. (Ht is indicated in section 7.1.1.)

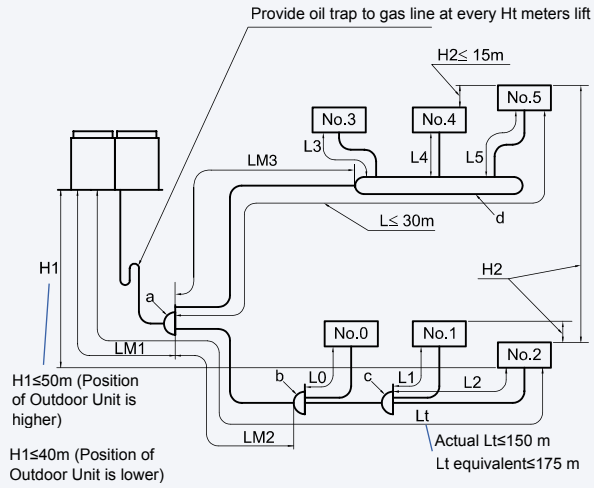

Maximum Piping Length	Actual Length	Lt ≤ 150 m
	Equivalent Length	Lt ≤ 175 m
Maximum Lift between Outdoor and Indoor Unit	In the case that the position of Outdoor Unit is higher than that of Indoor Unit.	H1 ≤ 50 m
	In the case that the position of Outdoor Unit is lower than that of Indoor Unit.	H1 ≤ 40 m
Maximum height between each indoor unit, or between an indoor unit and the multikit		H2 ≤ 15 m
Maximum piping length between the Multikit and the indoor unit	Between the "a" kit and the farthest Indoor Unit	L ≤ 40 m
	Between Each Multi-Kit and Each Indoor Unit	L0, L1, L2, L3, L4, L5 ≤ 30 m

Choosing each Multikit.

Example: For RAS-20FSN

Mark	a	b,c	d
Multikit	E-242SN	E-102SN	E-84HSN

Quantity of Additional Refrigerant Charge

The quantity is calculated by the following equation:

$W\ (Kg) = W_{11}+W_{12}+W_{13}+W_{14}+W_{15}+W_2$

1) W_{11} (kg): (Length total (m) de la Liquid Piping de Ø19,05) x 0,28
   W_{12} (kg): (Length total (m) de la Liquid Piping de Ø15,88) x 0,190
   W_{13} (kg): (Length total (m) de la Liquid Piping de Ø12,7) x 0,120
   W_{14} (kg): (Length total (m) de la Liquid Piping de Ø9,53) x 0,07
   W_{15} (kg): (Length total (m) de la Liquid Piping de Ø6,35) x 0,03

2) W_2 (Kg)
   Total quantity of Additional Refrigerant of Each Indoor Unit (kg)

Liquid Piping

Example: For RAS-20FSN

Mark	LM1	LM2	LM3	L0	L1	L2	L3	L4	L5
Size	Ø15.88	Ø9.53	Ø9.53	Ø6.35	Ø6.35	Ø9.53	Ø9.53	Ø9.53	Ø9.53
Length	50	20	20	5	3	5	3	5	3

W_{12} = (40+10) x 0.19 = 9.5

W_{14} = (20+20+5+3+5+3) x 0.07 = 3.92; W_{15} = (5+3) x 0.03 = 0.24

Indoor Unit

Example: For RAS-20FSN

Indoor Unit No.	0	1	2	3	4	5
Corresponding power (HP)	2	2	4	4	4	4
Additional refrigerant Quantity	Indoor units that do not require ref. charge					

In order from the smaller Indoor Unit

W_2 = 0

Total

$W\ (kg) = W_{11}+W_{12}+W_{13}+W_{14}+W_{15}+W_2$

= 0 + 9.5 + 0 + 3.92 + 0.24 + 0 = 13.66 kg

7

ITEM		LINE BRANCH SYSTEM WITH REDUCTION

Example of Systems

This figure shows examples of 6 Indoor Units combined with one Outdoor Unit.

The refrigerant pipes are shown as a single line in the diagrams.

However, liquid and gas line piping are required in the field.

NOTE:

Plan for an oil trap device for the gas piping at every Ht meters lift. (Ht is indicated in section 7.1.)

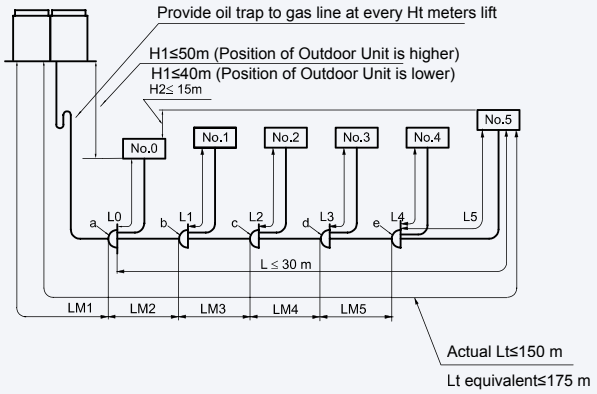

Maximum Piping Length	Actual Length	Lt ≤ 150 m
	Equivalent Length	Lt ≤ 175 m
Maximum Lift between Outdoor and Indoor Unit	In the case that the position of Outdoor Unit is higher than that of Indoor Unit.	H1 ≤ 50 m
	In the case that the position of Outdoor Unit is lower than that of Indoor Unit.	H1 ≤ 40 m
Maximum height between each indoor unit, or between an indoor unit and the multikit		H2 ≤ 15 m
Maximum piping length between the Multikit and the indoor unit	Between the "a" kit and the farthest Indoor Unit	L ≤ 40 m
	Between Each Multi-Kit and Each Indoor Unit	L0, L1, L2, L3, L4, L5 ≤ 30 m

Choosing each Multikit.

Example: For RAS-30FSN

Mark	a	b,c	d	e
Multikit	E-302SN	E-242SN	E-162SN	E-102SN

Quantity of Additional Refrigerant Charge

The quantity is calculated by the following equation:

$W\ (Kg) = W_{11}+W_{12}+W_{13}+W_{14}+W_{15}+W_2$

1) W_{11} (kg): (Total length (m) of Ø19.05 liquid piping) x 0.28
   W_{12} (kg): (Total length (m) of Ø15.88 liquid piping) x 0.190
   W_{13} (kg): (Total length (m) of Ø12.7 liquid piping) x 0.120
   W_{14} (kg): (Total length (m) of Ø9.53 liquid piping) x 0.07
   W_{15} (kg): (Total Length (m) of Ø6.35 Liquid Piping) x 0.03

2) W_2 (Kg)
   Total quantity of Additional Refrigerant of Each Indoor Unit (kg)

Liquid Piping

Example: For RAS-30FSN

Mark	LM1	LM2	LM3	LM4	LM5	L0	L1	L2	L3	L4	L5
Size	Ø19.05	Ø15.88	Ø15.88	Ø12.7	Ø9.53	Ø9.53	Ø9.53	Ø9.53	Ø9.53	Ø9.53	Ø9.53
Length	10	10	10	5	5	10	15	5	5	4	3

W_{11} = 10 x 0.28 = 2.8; W_{12} = (10+10) x 0.19 = 3.8;

W_{13} = 5 x 0.12 = 0.6; W_{14} = (5+10+15+5+5+4+3) x 0.07 = 3.29

Indoor Unit

Example: For RAS-30FSN

Indoor Unit No.	0	1	2	3	4	5
Corresponding power (HP)	5	5	5	5	5	5
Additional refrigerant Quantity	Indoor units that do not require ref. charge					

W_2 = 0

Total

$W\ (kg) = W_{11}+W_{12}+W_{13}+W_{14}+W_{15}+W_2$

= 2.8 + 3.8 + 0.6 + 3.29 + 0 + 0 = 10.49 kg

◆ Total SET-FREE System (FXN series)

ITEM		LINE BRANCH SYSTEM DOWN-SIZE SYSTEM
Example of Systems This figure shows examples of 5 Indoor Units combined with one Outdoor Unit. The refrigerant pipes are shown as a single line in the diagrams. However, low and high pressure gas piping is required in the installation between the outdoor unit and the CH unit. Gas piping is also required between the CH unit and the indoor unit. The liquid piping is connected between the Multikit and the indoor unit. *NOTE:* Plan for an oil trap device for the gas piping at every Ht meters lift. (Ht is indicated in section 7.1.)		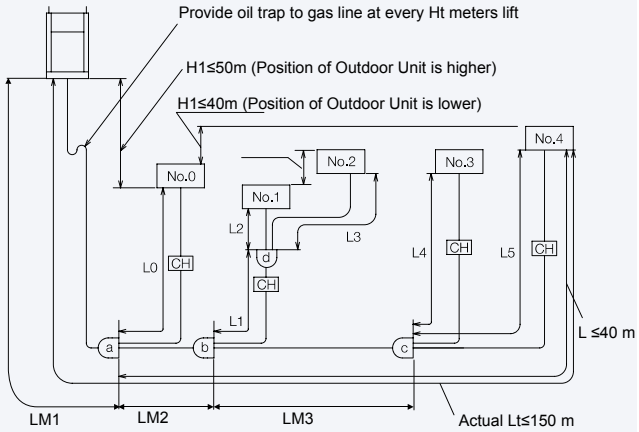
Maximum Piping Length	Actual Length	Lt ≤ 150 m
	Equivalent Length	Lt ≤ 175 m
Maximum Lift between Outdoor and Indoor Unit	In the case that the position of Outdoor Unit is higher than that of Indoor Unit.	H1 ≤ 50 m
	In the case that the position of Outdoor Unit is lower than that of Indoor Unit.	H1 ≤ 40 m
Maximum height between each indoor unit, or between an indoor unit and the multikit		H2 ≤ 15 m
Maximum Lift between Each Indoor Unit connected to the same CH unit.		H3 ≤ 4 m
Maximum Piping Lift between Each CH unit.		≤ 15 m
Maximum difference of piping length between each Indoor Unit and same CH Unit.		L3 - L2 ≤ 5 m
Maximum piping length between the Multikit and the indoor unit	Between the "a" kit and the farthest Indoor Unit	L ≤ 40 m
	Between Each Multi-Kit and Each Indoor Unit	L0, L1+ L2, L1+ L3, L4, L5 ≤ 30 m
	Between last Multi-Kit and the farthest Indoor Unit.	(*1)L4, L5 ≤ 5 m
Choosing each Multikit.	No.2 system	Use E-102XN at "a" and "b", E-52XN at "c".
	CH-4.0NE	Use E-102SN at "d"
		If you use the indoor unit only in cooling mode, use the Multikit of the FSN(E)

Quantity of Additional Refrigerant Charge

The quantity is calculated by the following equation:

$W (Kg) = W_{11}+W_{12}+W_{13}+W_{14}+W_{15}+W_2$

1) W_{11} (kg): (Total length (m) of Ø19.05 liquid piping) x 0.28
   W_{12} (kg): (Total length (m) of Ø15.88 liquid piping) x 0.190
   W_{13} (kg): (Total length (m) of Ø12.7 liquid piping) x 0.120
   W_{14} (kg): (Total length (m) of Ø9.53 liquid piping) x 0.07
   W_{15} (kg): (Total Length (m) of Ø6.35 Liquid Piping) x 0.03

2) W_2 (Kg)
   Total quantity of Additional Refrigerant of Each Indoor Unit (kg)

Liquid Piping

Example: For RAS-8FXNE

Mark	LM1	LM2	LM3	L1	L0	L2	L3	L4	L5
Size	Ø9.53				Ø6.35				
Length	20	10	10	2	13	8	8	5	5

W_{14} = (20 +10 +10 + 2) x 0.07 = 2.94;

W_{15} = (13+8+8+5+5) x 0.03 = 1.17

Indoor Unit

Example: For RAS-8FXN(E)

Indoor Unit No.	0	1	2	3	4
Corresponding power (HP)	1	1.5	1.5	2	2
Additional refrigerant Quantity	Indoor units that do not require ref. charge				

Total

$W (kg) = W_{11}+W_{12}+W_{13}+W_{14}+W_{15}+W_2$

= 0 + 0 + 0 + 2.94 + 1.17 + 0 = 4.11 kg

(1*): If piping length between main Multi-Kit "c" and the farthest Indoor Unit is longer than 5m, use the T-branch from the kit for the liquid piping (See section 7.1.5).

ITEM	MULTIKIT SYSTEM WITH REDUCTION

Example of Systems

This figure shows an example of 7 Indoor Units combined with one Outdoor Unit.

The refrigerant pipes are shown as a single line in the diagrams.

However, low and high pressure gas piping is required in the installation between the outdoor unit and the CH unit. Gas piping is also required between the CH unit and the indoor unit. The liquid piping is connected between the Multikit and the indoor unit.

NOTE:

Provide oil trap to both gas lines at every Ht meters lift.
(Ht is indicated in section 7.1.)

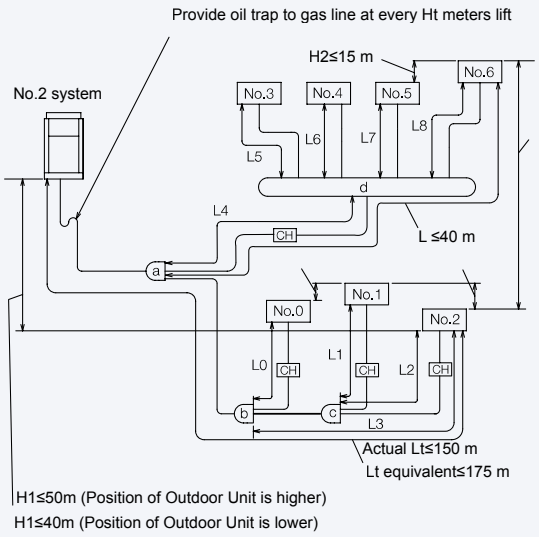

Maximum Piping Length	Actual Length	Lt ≤ 150 m
	Equivalent Length	Lt ≤ 175 m
Maximum Lift between Outdoor and Indoor Unit	In the case that the position of Outdoor Unit is higher than that of Indoor Unit.	H1 ≤ 50 m
	In the case that the position of Outdoor Unit is lower than that of Indoor Unit.	H1 ≤ 40 m
Maximum height between each indoor unit, or between an indoor unit and the multikit		H2 ≤ 15 m
Maximum Lift between Each Indoor Unit connected to the same CH unit.		H3 ≤ 4 m
Maximum Piping Lift between Each CH unit.		≤ 15 m
Maximum difference of piping length between each Indoor Unit and same CH Unit.		-
Maximum piping length between the Multikit and the indoor unit	Between the "a" kit and the farthest Indoor Unit	L ≤ 40 m
	Between Each Multi-Kit and Each Indoor Unit	L0, L1, L2, L5, L6, L7, L8 ≤ 30 m
	Between the multikit and the farthest Indoor Unit	(*1)L1, L2 ≤ 5 m
Choosing each Multikit.	No.2 system	Use E-102XN at "a"
	CH-4.0NE	Use E-52XN at "b" and "c"
	CH-8.0NE	Use E-84HSN at "d"
		If you use the indoor unit only in cooling mode, use the Multikit of the FSN(E)

Quantity of Additional Refrigerant Charge

The quantity is calculated by the following equation:

$W\ (Kg) = W_{11}+W_{12}+W_{13}+W_{14}+W_{15}+W_2$

1) W_{11} (kg): (Total length (m) of Ø19.05 liquid piping) x 0.28
   W_{12} (kg): (Total length (m) of Ø15.88 liquid piping) x 0.190
   W_{13} (kg): (Total length (m) of Ø12.7 liquid piping) x 0.120
   W_{14} (kg): (Total length (m) of Ø9.53 liquid piping) x 0.07
   W_{15} (kg): (Total Length (m) of Ø6.35 Liquid Piping) x 0.03

2) W_2 (Kg)
   Total quantity of Additional Refrigerant of Each Indoor Unit (kg)

Liquid Piping

Example: For RAS-10FXN(E)

Mark	Lt-L3	L4	L3-L2	L0	L1	L2	L5	L6	L7	L8
Size	Ø9.53				Ø6.35					
Length	20	10	10	2	13	8	8	5	5	12

W_{14} = (48+4) x 0.07 = 3.64;

W_{15} = (4+6+7+4+10+10+10+12) x 0.03 = 1.89

Indoor Unit

Example: For RAS-10FXN(E)

Indoor Unit No.	0	1	2	3	4	5	6
Corresponding power (HP)	1	1.5	1.5	2	2	2	2
Additional refrigerant Quantity	Indoor units that do not require ref. charge						

(1*): Select "N" number of Indoor Units in order from the smaller Indoor Unit (Reer to Page 10-33). W_2 = 0

Total

$W\ (kg) = W_{11}+W_{12}+W_{13}+W_{14}+W_{15}+W_2$

= 0 + 0 + 0 + 3.64 + 1.89 = 5.53 kg

(1*): If piping length between main Multi-Kit "c" and the farthest Indoor Unit is longer than 5m, use the T-branch from the kit for the liquid piping (See section 7.1.5).

ITEM	MULTIKIT SYSTEM WITH REDUCTION

Example of Systems

This figure shows an example of 5 Indoor Units combined with one Outdoor Unit.

The refrigerant pipes are shown as a single line in the diagrams.

However, low and high pressure gas piping is required in the installation between the outdoor unit and the CH unit. Gas piping is also required between the CH unit and the indoor unit. The liquid piping is connected between the Multikit and the indoor unit.

NOTE:

Provide oil trap to both gas lines at every Ht meters lift.
(Ht is indicated in section 7.1.)

No.2 system

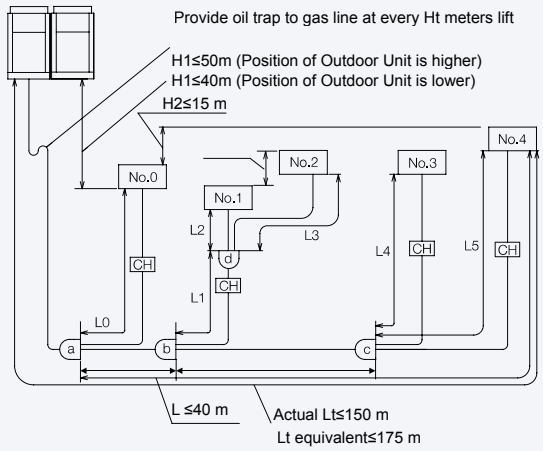

Maximum Piping Length	Actual Length	Lt ≤ 150 m
	Equivalent Length	Lt ≤ 175 m
Maximum Lift between Outdoor and Indoor Unit	In the case that the position of Outdoor Unit is higher than that of Indoor Unit.	H1 ≤ 50 m
	In the case that the position of Outdoor Unit is lower than that of Indoor Unit.	H1 ≤ 40 m
Maximum height between each indoor unit, or between an indoor unit and the multikit		H2 ≤ 15 m
Maximum Lift between Each Indoor Unit connected to the same CH unit.		H2 ≤ 4 m
Maximum Piping Lift between Each CH unit.		≤ 15 m
Maximum difference of piping length between each Indoor Unit and same CH Unit.		L3-L2 ≤ 5 m
Maximum piping length between the Multikit and the indoor unit	Between the “a” kit and the farthest Indoor Unit	L ≤ 40 m
	Between Each Multi-Kit and Each Indoor Unit	L0, L1+ L2, L1+ L3, L4,L5 ≤ 30 m
	Between last Multi-Kit and the farthest Indoor Unit	(*1)L4, L5 ≤ 5 m
Choosing each Multikit.	No.2 system	Use E-202XN at “a” and “b” and E-102XN at “c”
	CH-4.0NE	Use E-102XN at “a”
	CH-8.0NE	Use E-202XN at “b” and “c”
		Use E-102SN at “d”
		If you use the indoor unit only in cooling mode, use the Multikit of the FSN(E).

Quantity of Additional Refrigerant Charge

The quantity is calculated by the following equation:

$W (Kg) = W_{11}+W_{12}+W_{13}+W_{14}+W_{15}+W_2$

1) W_{11} (kg): (Total length (m) of Ø19.05 liquid piping) x 0.28
   W_{12} (kg): (Total length (m) of Ø15.88 liquid piping) x 0.190
   W_{13} (kg): (Total length (m) of Ø12.7 liquid piping) x 0.120
   W_{14} (kg): (Total length (m) of Ø9.53 liquid piping) x 0.07
   W_{15} (kg): (Total Length (m) of Ø6.35 Liquid Piping) x 0.03

2) W_2 (Kg)
   Total quantity of Additional Refrigerant of Each Indoor Unit (kg)

Liquid Piping

Example: For RAS-20FXN

Mark	Lt-L	LM1	LM2	L1	L2	L3	L4	L5	L0
Size	Ø15.88			Ø9.53			Ø6.35		
Length	40	10	10	8	2	4	11	12	11

W_{12} = (40+10) x 0.190 = 9.5;

W_{14} = (10+8+2+4+11+12) x 0.07 = 3.29;

W_{15} = 11 x 0.03 = 0.33

Indoor Unit

Example: For RAS-10FXN(E)

Indoor Unit No.	0	1	2	3	4
Corresponding power (HP)	2	4	4	5	5
Additional refrigerant Quantity	Indoor units that do not require ref. charge				

(1*): Select “N” number of Indoor Units in order from the smaller Indoor Unit (Reer to Page 10-33). W_2 = 0

Total

$W = W_{11}+W_{12}+W_{13}+W_{14}+W_{15}+W_2$

= 0 + 9.5 + 0 + 3.29 + 0.33 + 0= 13.12 kg

(1*): If piping length between main Multi-Kit “c” and the farthest Indoor Unit is longer than 5m, use the T-branch from the kit for the liquid piping (See section 7.1.5).

◆ Total System of SET-FREE (FSVNE series)

ITEM		MULTIKIT UNI-PIPING SYSTEM
Example of Systems These figures show examples of 6 Indoor Units combined with one Outdoor Unit. The refrigerant pipes are shown as single line in the diagrams. However, liquid and gas line piping are required in the field.		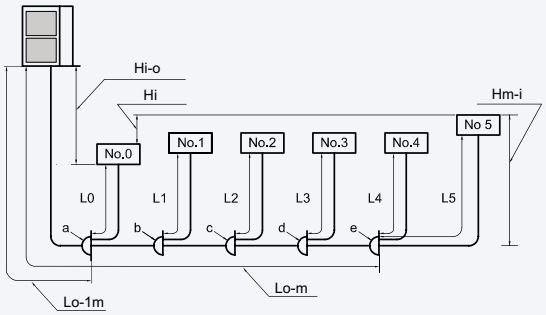
Total Piping Length	From the outdoor unit to the farthest Multikit	3FSVNE: Number of Indoor Units 2: Lo-m ≤ 40 m; 3: Lo-m ≤ 35 m; 4: Lo-m ≤ 25 m 4/5FSVNE: Lo-m ≤ 65 m
	From Outdoor Unit to all Indoor Units	Lo-m + L0 + L1 + L2 + L3 + L4 + L5 ≤ 65 for 3FSVNE Lo-m + L0 + L1 + L2 + L3 + L4 + L5 ≤ 135 for 4/5FSVNE
Maximum piping length between each Multikit and each indoor unit		L0, L1, L2, L3, L4, L5 ≤ 10 m
Maximum Lift between Outdoor and Indoor Unit	In the case that the position of Outdoor Unit is higher than that of Indoor Unit.	Hi-o ≤ 25 m
	In the case that the position of Outdoor Unit is lower than that of Indoor Unit.	Hi-o ≤ 25 m
Maximum Lift between Each Indoor Unit		Hi ≤ 10 m
Maximum piping lift between the Multikit and the indoor unit		Hm-i ≤ 5 m
Choosing each Multikit	RAS-3~5 FSVNE	Use E-102SN at “a, b, c, d” and “e”
Quantity of Additional Refrigerant Charge The quantity is calculated by the following equation: W (kg) = W_{11}+W_{12} 1) W_{11} (kg): (Total Length (m) of Ø9.53 Liquid Piping) x 0.06 2) W_{12} (kg): (Total Length (m) of Ø6.35 Liquid Piping) x 0.03	Liquid Piping	**Example:** For RAS-5FSVNE Mark: L_0-1m, L0, L1, L2, L3, L4, L5 Size: Ø9.53, Ø6.35, Ø6.35, Ø6.35, Ø6.35, Ø6.35, Ø6.35 Length: 21, 5, 3, 5, 3, 5, 3 W_{11} = 21 x 0.06 = 1.26 W_{12} = (5+3+5+3+5+3) x 0.03 = 0.72
	Total	W = W_{11} + W_{12} = 1.26 +0.72 = 1.98 kg

ITEM		DISTRIBUTOR UNI-PIPING SYSTEM
Example of Systems These figures show examples of 6 Indoor Units combined with one Outdoor Unit. The refrigerant pipes are shown as a single line in the diagrams. However, liquid and gas line piping are required in the field.		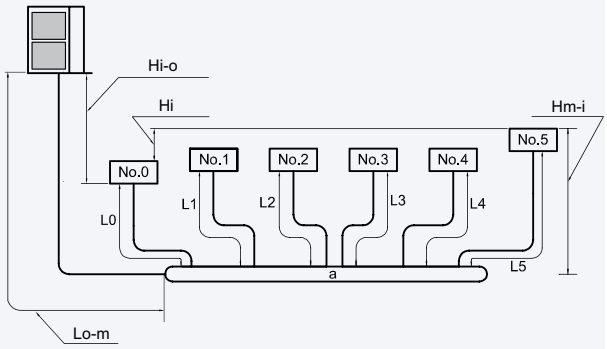
Total Piping Length	From the outdoor unit to the farthest Multikit	3FSVNE: Number of Indoor Units 2: Lo-m ≤ 40 m; 3: Lo-m ≤ 35 m; 4: Lo-m ≤ 25 m 4/5FSVNE: Lo-m ≤ 40 m
	From Outdoor Unit to all Indoor Units	Lo-m + L0 + L1 + L2 + L3 + L4 + L5 ≤ 65 for 3FSVNE Lo-m + L0 + L1 + L2 + L3 + L4 + L5 ≤ 135 for 4/5FSVNE
Maximum piping length between each Multikit and each indoor unit		L0, L1, L2, L3, L4, L5 ≤ 10 m
Maximum Lift between Outdoor and Indoor Unit	In the case that the position of Outdoor Unit is higher than that of Indoor Unit.	Hi-o ≤ 25 m
	In the case that the position of Outdoor Unit is lower than that of Indoor Unit.	Hi-o ≤ 25 m
Maximum Lift between Each Indoor Unit		Hi ≤ 10 m
Maximum piping lift between the Multikit and the indoor unit		Hm-i ≤ 5 m
Choosing each Multikit	RAS-3~5 FSVNE	Use E-84HSN at "a"
Quantity of Additional Refrigerant Charge The quantity is calculated by the following equation: W (kg) = W_{11}+W_{12} 1) W_{11} (kg): (Total Length (m) of Ø9.53 Liquid Piping) x 0.06 2) W_{12} (kg): (Total Length (m) of Ø6.35 Liquid Piping) x 0.03	Liquid Piping	**Example:** For RAS-5FSVNE Mark: L_0-1m, L0, L1, L2, L3, L4, L5 Size: Ø9.53, Ø6.35, Ø6.35, Ø6.35, Ø6.35, Ø6.35, Ø6.35 Length: 32, 5, 3, 5, 3, 5, 3 W_{11} = 32 x 0.06 = 1.92 W_{12} = (5+3+5+3+5+3) x 0.03 = 0.72
	Total	W = W_{11} + W_{12} = 1.92 +0.72 = 2.64 kg

7

ITEM		DISTRIBUTOR AND MULTIKIT UNI-PIPING SYSTEM
Example of Systems These figures show examples of 6 Indoor Units combined with one Outdoor Unit. The refrigerant pipes are shown as a single line in the diagrams. However, liquid and gas line piping are required in the field.		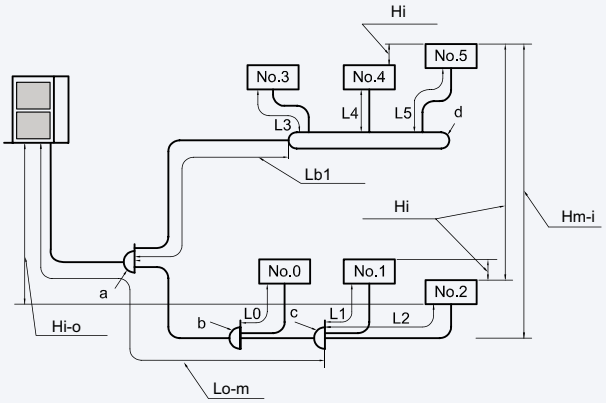
Total Piping Length	From the outdoor unit to the farthest Multikit	**3FSVNE** **Number of Indoor Units** 2: Lo-m ≤ 40 m 3: Lo-m ≤ 35 m 4: Lo-m ≤ 25 m **4/5FSVNE** Lo-m ≤ 40 m
	From Outdoor Unit to all Indoor Units	Lo-m + Lb1 + L0 + L1 + L2 + L3 + L4 + L5 ≤ 65 for 3FSVNE Lo-m + Lb1 + L0 + L1 + L2 + L3 + L4 + L5 ≤ 135 for 4/5FSVNE
Maximum piping length between each Multikit and each indoor unit		L0, L1, L2, L3, L4, L5 ≤ 10 m
Maximum Lift between Outdoor and Indoor Unit	In the case that the position of Outdoor Unit is higher than that of Indoor Unit.	Hi-o ≤ 25 m
	In the case that the position of Outdoor Unit is lower than that of Indoor Unit.	Hi-o ≤ 25 m
Maximum Lift between Each Indoor Unit		Hi ≤ 10 m
Maximum piping lift between the Multikit and the indoor unit		Hm-i ≤ 5 m
Choosing each Multikit	RAS-3~5 FSVNE	Use E-102SN at “a, b, c” and E-84HSN at “d”
Quantity of Additional Refrigerant Charge The quantity is calculated by the following equation: W (kg) = W_{11}+W_{12} 1) W_{11} (kg): (Total Length (m) of Ø9.53 Liquid Piping) x 0.06 2) W_{12} (kg): (Total Length (m) of Ø6.35 Liquid Piping) x 0.03	Liquid Piping	**Example:** For RAS-5FSVNE Mark: L_0-m +Lb1; L0; L1; L2; L3; L4; L5 Size: Ø9.53; Ø6.35; Ø6.35; Ø6.35; Ø6.35; Ø6.35; Ø6.35 Length: 31; 5; 3; 5; 3; 5; 3 W_{11} = 31 x 0.06 = 1.86 W_{12} = (5+3+5+3+5+3) x 0.03 = 0.72
	Total	W = W_{11} + W_{12} = 1.86 +0.72 = 2.58 kg

7.4. Caution on Refrigerant Leakage

Specifiers/installers have responsibility to follow local codes and regulations which specify safety requirements against refrigerant leakage.

7.4.1. Maximum Permissible Concentration of the HCFC Gas

Refrigerant R410A, charged in the SETFREE FSN system, is a noncombustible and non-toxic gas. However, if leakage occurs and the gas fills a room, the gas may cause suffocation. The maximum permissible concentration of HCFC R410A in the air is 0.44 kg/m³, according to the refrigeration and air conditioning facility standard (KHK S 0010) of the High Pressure Gas Protection Association (KHK) from Japan.

Therefore, some effective measure must be taken to lower the R410A concentration in air below 0.44 kg/m³, in case of leakage.

7.4.2. Calculation of the Refrigerant Concentration

1. Calculate the total quantity of refrigerant R (kg) charged in the system connecting all the Indoor Units of rooms to be air-conditioned.
2. Calculate the room volume V (m³) of each room.
3. Calculate the refrigerant concentration C (kg/m³) of the room according to the following equation:

$$\frac{R}{V} = C$$

R: Total quantity of charged refrigerant (kg)
V: Room volume (m³)
C: Refrigerant Concentration (≤0.44* kg/m³ for R410A)

NOTE:

(*) Use this value only for reference because this value is not fixed yet.

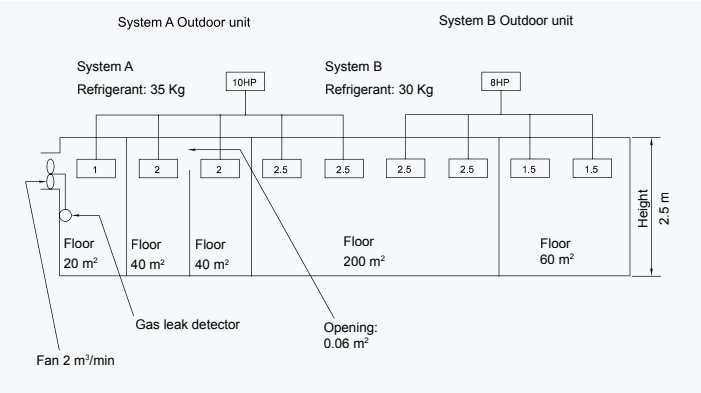

Room	R (kg)	V (m³)	C (kg/m³)	Countermeasure
A	30	150	0.2	-
B	65	500	0.13	-
C	35	100	0.35	-
D	35	100	0.35	-
C+D	35	200	0.175	-
E	35	50	0.7	2 m³/min

7.4.3. Countermeasure for the Refrigerant Leakage According to the KHK Standard

The facility must be arranged as follows according to the KHK standards, so that the refrigerant concentration will be below 0.97 lb/m³.

1. Provide a shutterless opening that will allow the fresh air to circulate into the room.
2. Provide a doorless opening with a size of 0.15% or more to the floor area.
3. Provide a Ventilator, Linked with a gas leak detector, of 0.5 m³/min or more ventilating capacity per Japanese Refrigeration Ton (=compressor displacement 8.5 m³/h) of the air conditioning system utilizing refrigerant).

OU Model	O.U. model ton
RAS-5FSN	2.27
RAS-8FSN(E)/FXN(E)	3.76
RAS-10FSN(E)/FXN(E)	4.04
RAS-12FSNE/FXNE	4.24
RAS-14FSN	5.25
RAS-16FSN/FXN	5.81
RAS-18FSN/FXN	6.21
RAS-20FSN/FXN	7.58
RAS-22FSN/FXN	8.18
RAS-24FSN/FXN	9.35
RAS-26FSN/FXN	10.15
RAS-28FSN	11.12
RAS-30FSN/FXN	12.12
RAS-32FSN/FXN	12.12

4. Pay a special attention to the place, such as a basement,etc., where refrigerant can stay, since refrigerant is heavier than air.

HITACHI
Inspire the Next

8. Electrical Data

This chapter describes the electrical requirements for each unit of the Hitachi SET FREE FSN(E)/FXN(E)/FSVNE series.

Contents

8. Electrical Data 247
8.1. Indoor Units 248
8.2. Complementary System – KPI 249
8.3. Outdoor Units 249

8.1. Indoor Units

Model		Unit Main Power			Applicable Voltage (V)		Indoor Fan Motor		
		(V)	F	HZ	Max	Min.	F	RNC(A)	IPT(kW)
RCI 4-way cassette type	RCIM-1.0FSN	230	1	50	253	207	1	0.4	0.08
	RCIM-1.5FSN							0.4	0.08
	RCIM-2.0FSN							0.4	0.08
	RCI -1.0FSN1E							0.2	0.04
	RCI-1.5FSN1E							0.2	0.05
	RCI-2.0FSN1E							0.2	0.05
	RCI-2.5FSN1E							0.3	0.06
	RCI-3.0FSN1E							0.4	0.09
	RCI-3.5FSN1E							0.4	0.09
	RCI-4.0FSN1E							0.7	0.11
	RCI-5.0FSN1E							0.8	0.14
	RCI-6.0FSN1E							1.0	0.18
RCI 2-way cassette type	RCD-1.0FSN	230	1	50	253	207	1	0.2	0.05
	RCD-1.5FSN							0.4	0.07
	RCD-2.0FSN							0.4	0.09
	RCD-2.5FSN							0.5	0.10
	RCD-3.0FSN							0.6	0.12
	RCD-4.0FSN							0.6	0.13
	RCD-5.0FSN							0.9	0.19
Ceiling type	RPC-2.0FSNE	230	1	50	253	207	1	0.6	0.14
	RPC-2.5FSNE							0.7	0.15
	RPC-3.0FSNE							0.8	0.17
	RPC-3.5FSNE							0.8	0.17
	RPC-4.0FSNE							0.8	0.18
	RPC-5.0FSNE							1.1	0.23
	RPC-6.0FSNE							1.1	0.23
In-the-ceiling type	RPI-0.8FSN1E	230	1	50	253	207	1	0.3	0.08
	RPI-1.0FSN1E							0.3	0.08
	RPI-1.5FSN1E							0.6	0.10
	RPI-2.0FSN1E							0.9	0.21
	RPI-2.5FSN1E							1.1	0.24
	RPI-3.0FSN1E							1.2	0.26
	RPI-3.5FSN1E							1.2	0.26
	RPI-4.0FSN1E							1.2	0.26
	RPI-5.0FSN1E							1.8	0.38
	RPI-6.0FSN1E							1.8	0.38
	RPI-8.0FSNE							4.7	1.01
	RPI-10.0FSNE							5.2	1.15
Wall type	RPK–1.0FSN1M	230	1	50	253	207	1	0.2	0.03
	RPK -1.5FSN1M							0.2	0.03
	RPK-0.8FSNM							0.3	0.03
	RPK-1.0FSNM							0.3	0.03
	RPK-1.5FSNM							0.3	0.03
	RPK-2.0FSNM							0.3	0.03
	RPK-2.5FSNM							0.7	0.09
	RPK-3.0FSNM							0.7	0.09
	RPK-3.5FSNM							0.7	0.09
	RPK-4.0FSNM							0.7	0.09
Floor Type	RPF-1.0FSNE	230	1	50	253	207	1	0.2	0.04
	RPF-1.5FSNE							0.2	0.04
	RPF-2.0FSNE							0.4	0.09
	RPF-2.5FSNE							0.4	0.09
Floor-Concealed Type	RPFI-1.0FSNE	230	1	50	253	207	1	0.2	0.04
	RPFI-1.5FSNE							0.2	0.04
	RPFI-2.0FSNE							0.4	0.09
	RPFI-2.5FSNE							0.4	0.09

(V): Supply Voltage (V)
PH: Phase (φ)
Hz: Frequency (Hz)
RNC: Running Current Indoor Unit(A)
IPT: Total Input Power Indoor Unit (kW)

NOTE:
Specifications in these tables are subject to change without notice in order that HITACHI may bring the latest innovations to their customers

8.2. Complementary System – KPI

Model	Unit Main Power			Applicable Voltage (V)		Fan Motor .		
	(V)	F	HZ	Max	Min.	F	RNC(A)	IPT(kW)
KPI-2521	230	1	50	253	207	1	0.6	0.12
KPI-5021							1.0	0.22
KPI-8021							1.8	0.41
KPI-10021							2.3	0.52

V: Supply Voltage (V)
PH: Phase (φ)
Hz: Frequency (Hz)
RNC: Running Current Indoor Unit(A)
TP: Total Input Power Indoor Unit (kW)

NOTE
Specifications in these tables are subject to change without notice in order that HITACHI may bring the latest innovations to their customers.

8.3. Outdoor Units

◆ FSN/FXN Outdoor Units

Model	Unit Main Power			Applicable Voltage		Total Power Consumption					Outdoor Fan Motor			MC
								Cooling Operation		Haeting Operation				
	(V)	F	HZ	Max	Min.	F	STC	RNC	TP	RNC	TP	F	RNC	TP	
RAS-5FSN	380/415	3	50	456	342	3	8.0/7.0	7.7/7.0	4.65	7.4/6.7	4.44	1	1.10/1.00	0.23	9.0
RAS-8FSNE							81.0/74.0	11.5/10.5	6.98	10.1/9.3	6.13	1	1.25/1.15	0.26	14.0
RAS-8FXNE							81.0/74.0	12.0/11.0	7.24	10.6/9.7	6.39	1	1.25/1.15	0.26	14.0
RAS-10FSNE							86.0/79.0	14.4/13.2	8.72	14.4/13.2	8.63	1	2.38/2.18	0.50	17.0
RAS-10FXNE							86.0/79.0	15.2/13.9	9.22	15.2/14.0	9.13	1	2.38/2.18	0.50	17.0
RAS-12FSNE							89.0/81.0	17.2/15.8	10.60	18.0/16.5	10.12	1	2.38/2.18	0.50	21.0
RAS-12FXNE							89.0/81.0	18.0/16.5	11.10	18.9/17.3	10.60	1	2.38/2.18	0.50	21.0
RAS-14FSN							88.0/80.0	23.7/21.7	14.18	20.9/19.1	12.24	1	4.03/3.69	0.84	30.0
RAS - 16FSN							94.0/86.0	24.0/21.9	14.30	19.7/19.0	11.40	1	4.03/3.69	0.84	33.0
RAS-16FXN							94.0/86.0	24.0/21.9	12.10	19.7/18.0	12.10	1	6.89/6.32	1.44	30.0
RAS-18FSN							102.0/93.0	25.0/22.9	15.00	25.5/23.3	14.90	1	6.89/6.32	1.44	32.0
RAS-18FXN							106.0/97.0	27.5/25.2	16.44	27.8/25.5	16.34	1	6.89/6.32	1.44	32.0
RAS - 20FSN							106.0/97.0	25.0/22.9	15.10	24.3/22.3	14.40	1	6.89/6.32	1.44	37.0
RAS-20FXN							106.0/97.0	25.0/22.9	16.10	24.3/22.3	16.00	1	6.89/6.32	1.44	37.0
RAS-22FSN							113.0/103.0	33.1/30.4	20.06	33.2/30.4	19.90	1	6.89/6.32	1.44	42.0
RAS-22FXN							113.0/103.0	35.5/32.5	21.50	35.6/32.6	21.34	1	6.89/6.32	1.44	42.0
RAS - 24FSN							116.0/106.0	33.0/30.2	18.70	29.9/27.3	16.80	1	9.96/9.13	2.08	50.0
RAS-24FXN							116.0/106.0	33.0/30.2	20.30	29.9/27.3	19.60	1	9.96/9.13	2.08	45.0
RAS-26FSN							124.0/113.0	42.3/38.7	24.49	39.7/36.4	22.76	1	9.96/9.13	2.08	54.0
RAS-26FXN							124.0/113.0	45.9/42.0	26.57	40.5/37.1	24.84	1	9.96/9.13	2.08	54.0
RAS-28FSN							125.0/115.0	46.4/42.5	26.85	41.7/38.2	23.88	1	9.96/9.13	2.08	59.0
RAS - 30FSN							134.0/123.0	46.7/42.8	26.40	40.1/36.7	22.60	1	9.96/9.13	2.08	66.0
RAS-30FXN							134.0/123.0	46.7/42.8	26.40	40.1/36.7	25.60	1	9.96/9.13	2.08	61.0
RAS-32FSN							134.0/123.0	55.8/51.1	31.58	47.6/43.6	27.24	1	9.96/9.13	2.08	70.0
RAS-32FXN							134.0/123.0	59.4/54.4	33.60	67.1/61.5	66.40	1	9.96/9.13	2.08	70.0

(V): Supply Voltage (V)
PH: Phase (φ)
Hz: Frequency (Hz)
STC: Starting Current (A)
RNC: Running Current (A)
TP: Total power (kW)
MC: Maximum Current (A)

NOTES:

1. The above performance data is based on 7.5 m equivalent piping length and 0 m piping lift.
   These data are based on the same conditions as the nominal heating and cooling capacities.
2. Model RAS-5FSN is equipped with one compressor with an Inverter. RAS-8~32FSN(E)/FXN(E) Models are equipped with one compressor with an Inverter and one. two. three. four or five ON/OFF controlled compressors.

◆ FSVN(E) Outdoor Units

Model	Unit Main Power			Applicable Voltage		Total Power Consumption						MC
								Cooling Operation		Haeting Operation		
	U	F	HZ	Max	Min.	F	STC	RNC	TP	RNC	TP	
RAS-3FSVNE	230	1	50	253	207	1	6.5	10.7	2.16	11.9	2.41	25
RAS-4FSVNE				253	207	1	10.5	15.0	3.07	15.3	3.13	32
RAS-5FSVNE				253	207	1	15	19.2	3.94	20.0	4.11	32

(V): Supply Voltage (V)
PH: Phase (φ)
Hz: Frequency (Hz)
STC: Starting Current (A)
RNC: Running Current (A)
TP: Total Power (kW)
MC: Maximum Current (A)

NOTES

1. The above performance data is based on 7.5 m equivalent piping length and 0 m piping lift.
2. This data is based on the same conditions ase the nominal heating and cooling capacities. Refer to the notes of the Unit's General Data. Specifications in these tables are subject to change without notice in order that HITACHI may bring the latest innovations to their customers.

HITACHI
Inspire the Next

9. Electrical Wiring

This chapter describes the Electrical Wiring Connection and shows how to set the Dip Switches and the H-Link System of the new Hitachi SET FREE FSN(E)/FXN(E)/FSVNE series.

Contents

9. Electrical Wiring 251

9.1. General Check 252

9.2. Setting and Function of DIP Switches for Outdoor Units 253

9.2.1. FSN(E)/FXN(E) Units 253

9.2.2. FSVN(E) Units 254

9.3. Setting and Function of DIP Switches for Indoor Units 255

9.3.1. Indoor Units 255

9.4. Setting of DIP switches for Complementary Systems and Accessories 256

9.4.1. Complementary Systems 256

9.4.2. Accessories 256

9.5. Common Wiring 257

9.5.1. Electrical Wiring Between IU and OU 257

9.6. Wiring Size 259

9.7. H-LINK System 261

9.7.1. Application 261

9.7.2. Characteristics. 261

9.7.3. Specifications 261

9.7.4. Setting of DIP Switches for the Units 262

9.7.5. Examples of H-LINK system: 263

9.8. PSC-5HR 265

9.8.1. Example of a System with PSC-5HR 265

9.8.2. Internal Layout of the Components 265

9.1. General Check

ATTENTION:

- *Turn OFF the main power switch to the indoor unit and the outdoor unit before electrical wiring work or a periodical check is performed.*
- *Check to ensure that the indoor fan and the outdoor fan have stopped before electrical wiring work or periodical check is performed.*
- *Protect the wires, drain pipe, electrical parts, etc. from rats or other small animals. If all these parts are not protected, rats or other small animals may gnaw at these parts. In the worst case, a fire may occur.*
- *Avoid the wires from touching the refrigerant pipes, plate edges and electrical parts inside the unit. Otherwise, the wires will be damaged and at the worst, a fire will occur.*

CAUTION:

Tightly secure the wires with the cord clamp inside the indoor unit.

NOTE:

Fix the rubber bushes with adhesive when the conduit tubes to the outdoor unit are not used.

1. Make sure that the field-selected electrical components (main power switches, circuit breakers, wires, conduit connectors and wire terminals) have been properly selected according to the electrical data given in this technical catalog. Make sure that the components comply with National Electrical code (NEC)
2. Check to ensure that the power supply voltage is within 10% of the rated voltage.
3. Check the capacity of the electrical wires. If the power source capacity is too low, the system cannot be started due to the voltage drop.
4. Check to ensure that the earth wire is connected.
5. Power Source Main Switch
   Install a multi-pole switch with a space of 3.5mm or more between each phase.

NOTE:
The "■" mark indicates the position of the DIP switches. The figures show the settings before the shipment or after the selection.

By using DSW4, 7 or 8 the unit is started or stopped 10 to 20 seconds after the switch is operated.

CAUTION:
Before setting DIP switches, first turn off power source. If the switches are set without turning off the power source, the contents of the setting are invalid.

9.2. Setting and Function of DIP Switches for Outdoor Units

◈ Number and position of DIP switches

The PCB in the outdoor unit is operated with 8 types of dip switches and 3 types of push switch.

9.2.1. FSN(E)/FXN(E) Units

DSW1: Refrigerant cycle no. Settings.
Setting is required if H-Link is used. Setting position before shipment are all OFF (Refrigerant cycle No. 0). In the same Refrigerant Cycle set the same refrigerant cycle no. for the outdoor unit and for the indoor units as shown in chapter 3 Service Manual 0032.

	Cycle num 0
Setting before shipment	

DSW2: Capacity Settings.
Setting is not required. Each outdoor unit is set before shipment as shown in chapter 3 of Service Manual 0032.

DSW3: Height difference.
Setting is required as indicated in chapter 3 of Service Manual SMXX0032.

Setting before shipment	

DSW4: Test Operation & Service Settings.
Setting is required. This dip switch is utilized for servicing as indicated in chapter 3 of Service Manual SMXX0032.

Setting before shipment	

DSW5: Emergency operation of the compressor.
Setting is not required. All compressors are running except the selected compessor, as indicated in chapter 3 of Service Manual SMXX0032.

Setting before shipment 400V-60Hz Power supply	

DSW6: Piping Length.
Setting is required. Set the dip switch according to your requirements, as indicated in chapter 3 of Service Manual SMXX0032.

Setting before shipment Length < 25m	

DSW7: Power supply setting.
Setting is required. Set the dip switch according to your requirements, as indicated in chapter 3 of Service Manual SMXX0032.

Setting before shipment (400V)	

DSW10: Transmission setting.
Setting is required for cancellation of end resistance and fuse protection, as indicated in chapter 3 of Service Manual SMXX0032.

Setting before shipment	

Push Switch

Manual discharge	PSW1
For Check	PSW2 PSW3

9.2.2. FSVN(E) Units

DSW1: Test run.
Setting is required as indicated in chapter 3 of Service Manual SMXX0032.

Setting before shipment	

DSW2: Optional Function Setting.
Setting is required as indicated in chapter 3 of Service Manual SMXX0032.

Setting before shipment	

DSW3: Capacity.
Setting is required as indicated in chapter 3 of Service Manual SMXX0032.

DSW4: Refrigerant No. Setting.
Setting is required as indicated in chapter 3 of Service Manual SMGB0032.

Setting before shipment	

DSW5: Transmission setting.
Setting is required for cancellation of end resistance and fuse protection, as indicated in chapter 3 of Service Manual SMXX0032.

Setting before shipment	

DSW6: Piping Length.
Setting is required. Set the dip switch according to your requirements, as indicated in chapter 3 Service Manual 0032.

Setting before shipment	

NOTE:
The "■" mark indicates the position of the DIP switches. The figures show the settings before the shipment or after the selection.

By using DSW4, 7 or 8 the unit is started or stopped 10 to 20 seconds after the switch is operated.

CAUTION:
Before setting DIP switches, first turn off power source. If the switches are set without turning off the power source, the contents of the setting are invalid.

9.3. Setting and Function of DIP Switches for Indoor Units

◈ Number and position of DIP switches.

The PCB in the indoor unit operates with 5 types of DIP switches and one rotary switch.

9.3.1. Indoor Units

RSW: Unit N° Setting.
Setting is required. Set the unit No. of all indoor units respectively and serially, by following setting position shown in chapter 3 of Service Manual SMXX0032. Numbers must start from "1" for every outdoor unit.

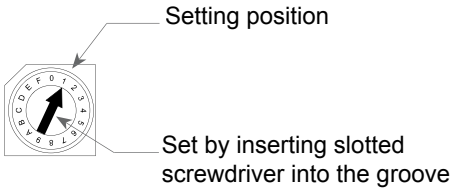

DSW2: Optional Function Setting. (RPK FSNM only)
Setting is not required. This switch is utilized for setting the optional functions as indicated in chapter 3 of Service Manual SMXX0032.

Setting before shipment	ON 1 2 3 4 5 6 7 8

DSW3: Capacity code setting.
No setting is required because it was performed before shipment. This DIP switch is utilized for setting the capacity code which corresponds to the power of the indoor unit as indicated in chapter 3 of Service Manual SMXX0032.

DSW5: Refrigerant cycle no. Settings.
Setting is required. Setting position before shipment are all OFF (Refrigerant cycle No. 0). In the same refrigerant cycle, set the same cycle number for the Outdoor Unit and for the Indoor Units as indicated in chapter 3 of Service Manual SMXX0032.

Setting before shipment	ON 1 2 3 4

DSW6: Unit Model Code Setting. (Not available for RCI and RPK)
Setting is not required. This switch is utilized for setting the model code which corresponds to the indoor unit type as indicated in chapter 3 of Service Manual SMXX0032.

DSW7: Fuse Recover and Remote Control Selection.
Setting required for fuse recover or PC-2H2 / PC-P1HE selection as indicated in chapter 3 of Service Manual SMXX0032.

Setting before shipment	ON 1 2
Setting before shipment (RPK-FSN1M)	ON OFF

DSW8: Not used (RCI only)

Setting before shipment	ON 1 2

SSW: Remote control switch (except RPK, RCD).

	New	Old
PC-P1HE Before Shipment.	ON OFF	
PC2H2 (see DSW7)	ON OFF	

9.4. Setting of DIP Switches for Complementary Systems and Accessories

9.4.1. Complementary Systems

◈ System: Total Heat Exchanger - KPI

DSW5:

Setting before shipment	ON 1 2 3 4

◈ System: Econofresh Kit - EG

You need the DIP Switches of the PCB of the RPI indoor units.

9.4.2. Accessories

◈ Accesory: CH-Box

DSW2:

Setting before shipment	ON 1 2 3 4 5 6

DSW5:

Setting before shipment	ON 1 2

9.5. Common Wiring

9.5.1. Electrical Wiring Between IU and OU

ATTENTION:
Pay attention to the connection of the operating line. Incorrect connection may cause the failure of PCB.

Connect the electrical wires between the indoor unit and the outdoor unit, as shown below.

- When you are installing the electrical wiring, follow the local codes and the local regulations.
- The refrigerant piping and the control wiring are connected to the units in the same refrigerant cycle.
- Use shielded twisted pair cable or twisted cable (more than 0.75 mm²) for operation wiring between the outdoor unit and the indoor unit, and operation wiring between the indoor units.
- Use 2-core wire for the operating line (Do not use wire with more than 3 cores).
- Use shielded wires for intermediate wiring to protect the units from noise obstacle at length of less than 300m and size complied with local code.
- For FXN(E) series it is recommended to connect the indoor unit and the CH unit in the same electrical circuit.
- Open a hole near the connection hole of power source wiring when the multiple outdoor units are connected from one power source line.
- The recommended breaker sizes are shown in the table of electrical data and recommended wiring, breaker size\1 O.U.
- If the duct provided by the installer is not used, fix rubber bushes with adhesive on the panel.
  All the installation wiring and equipment must comply with the local and the international codes.

◈ FSN(E)

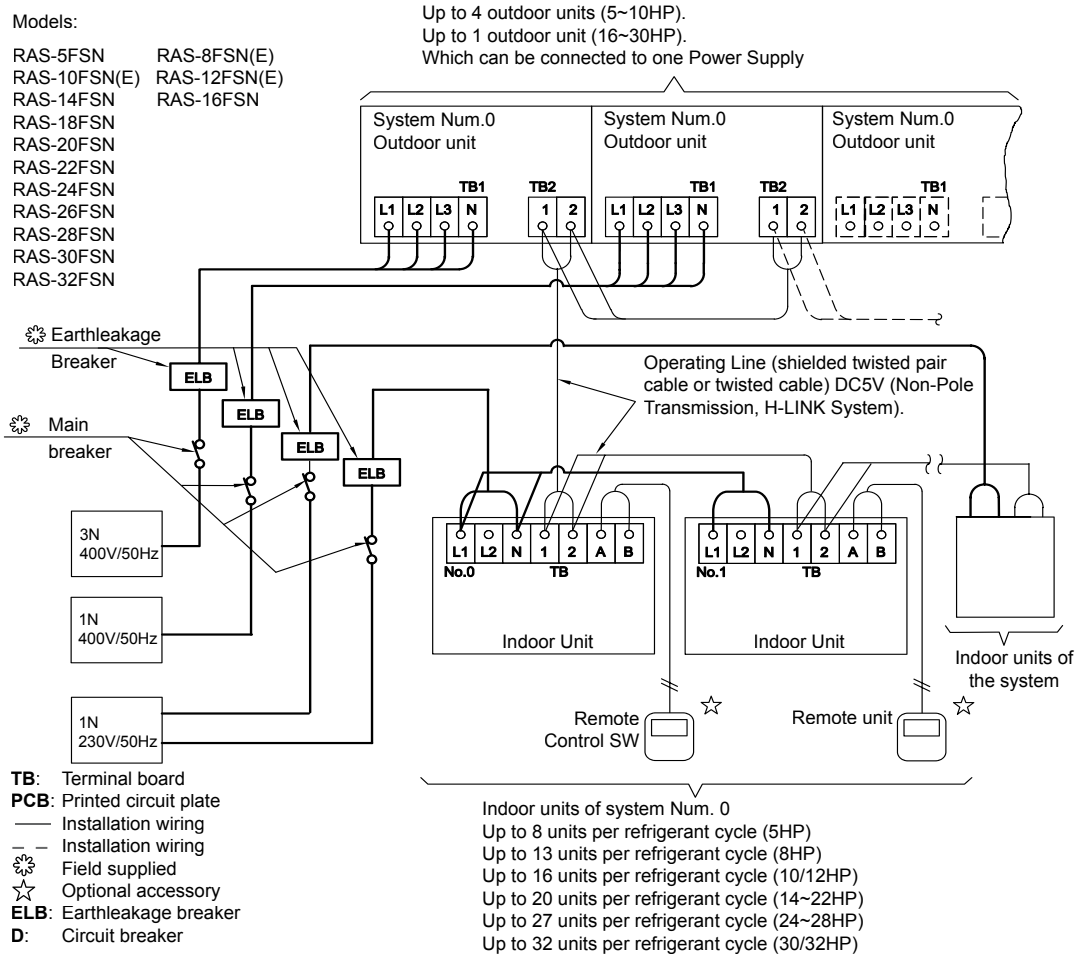

◈ FXN(E)

Models:

RAS-8FXN(E) RAS-10FXN(E)
RAS-12FXN RAS-16FXN
RAS-18FXN RAS-20FXN
RAS-22FXN
RAS-24FXN
RAS-26FXN
RAS-30FXN
RAS-32FXN

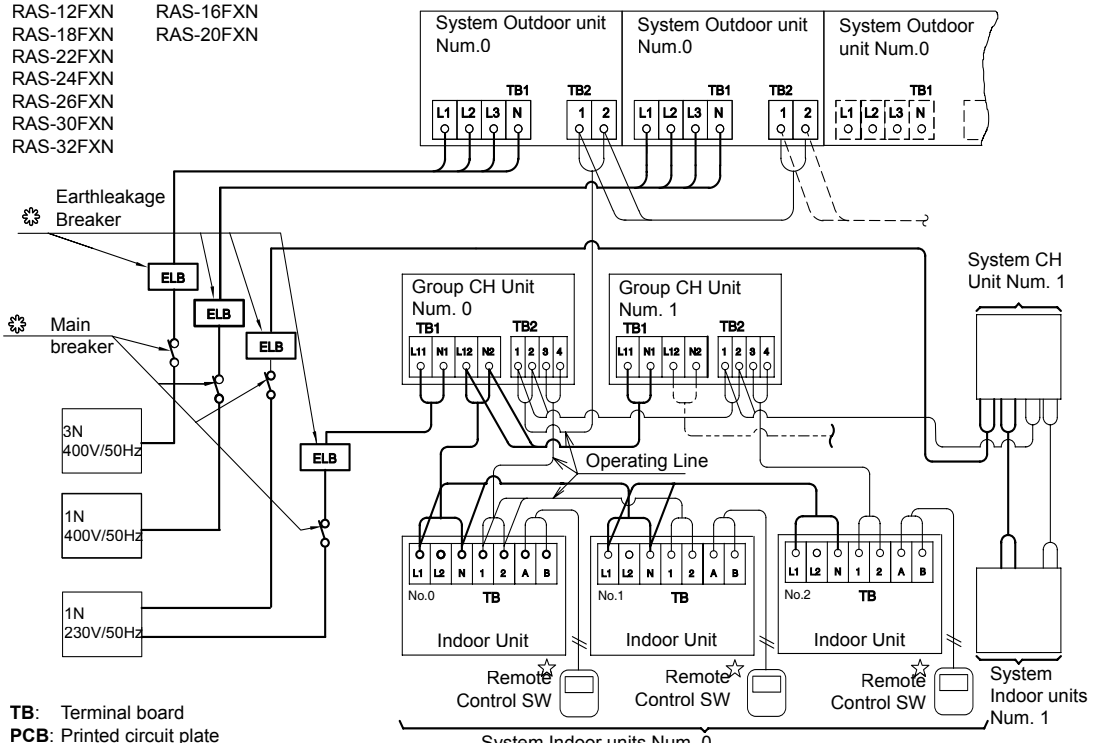

TB: Terminal board
PCB: Printed circuit plate
—— Installation wiring
— — Installation wiring
Field supplied
☆ Optional accessory
ELB: Earthleakage breaker
D: Circuit breaker

System Indoor units Num. 0
Up to 8 units per refrigerant cycle (5HP)
Up to 13 units per refrigerant cycle (8HP)
Up to 16 units per refrigerant cycle (10~12HP)
Up to 20 units per refrigerant cycle (16~22HP)
Up to 27 units per refrigerant cycle (24~26HP)
Up to 32 units per refrigerant cycle (30/32HP)

NOTE:
In the case that 17~32 Indoor Units are connected to one Outdoor Unit, the CH-Unit can not be connected to different refrigerant cycles Indoor Units.

◈ FSVN(E)

Models:

RAS-3FSVNE
RAS-4FSVN
RAS-4FSVN

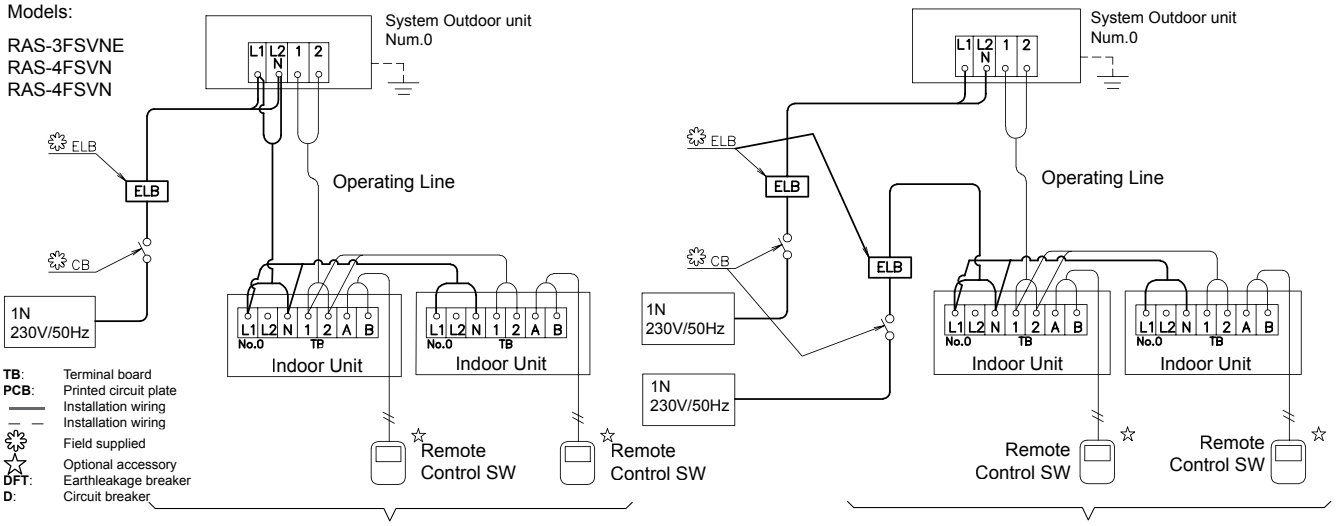

TB: Terminal board
PCB: Printed circuit plate
—— Installation wiring
— — Installation wiring
Field supplied
☆ Optional accessory
DFT: Earthleakage breaker
D: Circuit breaker

Indoor units of system Num. 0
Up to 4 units per refrigerant cycle (3HP).
Up to 6 units per refrigerant cycle (4HP).
Up to 7 units per refrigerant cycle (5HP).

Indoor units of system Num. 0
Up to 4 units per refrigerant cycle (3HP).
Up to 6 units per refrigerant cycle (4HP).
Up to 7 units per refrigerant cycle (5HP).

9.6. Wiring Size

◈ Connection wiring

The minimum thickness of the wiring that must be used in the installation.

NOTE:
(*) Except RPI-8/10

- Indoor Units

Model	Power Supply.	Maximum Current	Size of power source cable		Size of transmission cable	
			EN60 335-1 ❶	MLFC ❷	EN60 335-1 ❶	MLFC ❷
All indoor units (*)	1~ 230V/50Hz	5 A	0.75 mm²	0.5 mm²	0.75 mm²	0.5 mm²
RPI-8/10		10 A	1.5 mm²	0.75 mm²		

NOTE:
Follow local codes and regulations when selecting field wires, Circuit breakers and Earth Leakage breakers

Use wires that are not lighter than the ordinary polychloroprene sheathed flexible cord (code designation H05RN-F)

The earth cable size must comply with local code: IEC 245, nº 571.

- Outdoor Units

Model		Power Supply.	Maximum Current	Size of power source cable		Size of transmission cable	
				EN60 335-1 ❶	MLFC ❷	EN60 335-1 ❶	MLFC ❷
FSVNE	RAS-3FSVNE	1~230V/50 Hz	25 A	4.0 mm²	3.5 mm²	0.75 mm²	0.5 mm²
	RAS-4FSVNE		32 A	6.0 mm²	3.5 mm²		
	RAS-5FSVNE		32 A	6.0 mm²	3.5 mm²		
FSN(E)	RAS-5FSN	1~400V/50Hz	8 A	2.5 mm²	0.75 mm²		
	RAS-8FSNE		14 A	2.5 mm²	0.75 mm²		
	RAS-10FSNE		17 A	2.5 mm²	1.25 mm²		
	RAS-12FSNE		21 A	2.5 mm²	1.25 mm²		
	RAS-14FSN		30 A	4.0 mm²	2.0 mm²		
	RAS - 16FSN		33 A	60 mm²	3.5 mm²		
	RAS-18FSN		32 A	6.0 mm²	3.5 mm²		
	RAS - 20FSN		37 A	-	3.5 mm²		
	RAS-22FSN		42 A	10.0 mm²	3.5 mm²		
	RAS - 24FSN		50 A	10.0 mm²	5.5 mm²		
	RAS-26FSN		54 A	10.0 mm²	5.5 mm²		
	RAS-28FSN		59 A	10.0 mm²	5.5 mm²		
	RAS - 30FSN		66 A	-	8.0 mm²		
	RAS-32FSN		70 A	-	8.0 mm²		
FXN(E)	RAS-8FXNE		14 A	2.5 mm²	2.0 mm²		
	RAS-10FXNE		18 A	2.5 mm²	2.0 mm²		
	RAS-12FXNE		21 A	2.5 mm²	2.0 mm²		
	RAS-16FXN		30 A	6.0 mm²	3.5 mm²		
	RAS-18FSN		32 A	6.0 mm²	3.5 mm²		
	RAS-20FXN		34 A	-	3.5 mm²		
	RAS-22FXN		42 A	10.0 mm²	3.5 mm²		
	RAS-24FXN		45 A	-	5.5 mm²		
	RAS-26FXN		54 A	10.0 mm²	5.5 mm²		
	RAS-30FXN		61 A	-	8.0 mm²		
	RAS-32FXN		70 A	10.0 mm²	8.0 mm²		

The wire sizes indicated in the previous table and marked with ❶ have been selected with the maximum current of the unit according to European standard EN60 335-1.
The wire sizes indicated in the previous table and marked with ❷ have been selected with the maximum current of the unit according to cable MLFC (Flame Retardant Polyflex Wire) manufactured by HITACHI Cable Ltd., Japan.
If the power cables are connected in series, add each unit's maximum current and select the cables according to the following table.

NOTE:
❸ If the current exceeds 63A, do not connect the cables in series.

Selection according to EN60 335-1		Selection according to MLFC (at cable Temp. Of 60 ºC)	
Current i (A)	Wire Size	Current i (A)	Wire Size
I ≤ 6	0.75 mm²	I ≤ 15	0.5 mm²
6 < i ≤ 10	1.0 mm²	15 < i ≤ 18	0.75 mm²
10 < i ≤ 16	1.5 mm²	18 < i ≤ 24	1.25 mm²
16 < i ≤ 25	2.5 mm²	24 < i ≤ 34	2.0 mm²
25 < i ≤ 32	4.0 mm²	34 < i ≤ 47	3.5 mm²
32 < i ≤ 40	6.0 mm²	47 < i ≤ 62	5.5 mm²
40 < i ≤ 63	10.0 mm²	62 < i ≤ 78	8.0 mm²
63 < i	❸	78 < i ≤ 112	14
		112 < i ≤ 147	22

HITACHI
Inspire the Next

NOTE:
(*) Except RPI-8/10

NOTE:
ELB: Differential switch.
CB: Magnetothermic switch.

◈ Main switches protection

Select the main switches according to the next table

- Indoor Units

Model	Power Supply.	Maximum Current	CB	ELB Num. of poles/A/mA
All indoor units (*)	1~ 230V/50Hz	5 A	6A	2/40/30
RPI-8/10		10 A	15 A	

- Outdoor Units

	Model	Power Supply.	Maximum Current	CB	ELB Num. of poles/A/mA
FSVNE	RAS-3FSVNE	1~230V/50 Hz	25 A	25 A	2/40/30
	RAS-4FSVNE		32 A	32 A	
	RAS-5FSVNE		32 A	32 A	
FSN(E)	RAS-5FSN	1~400V/50Hz	9 A	10 A	4/40/30
	RAS-8FSNE		14 A	15 A	
	RAS-10FSNE		17 A	20A	
	RAS-12FSNE		21 A	25 A	
	RAS-14FSN		30 A	32 A	
	RAS - 16FSN		33 A	40 A	4/63/30
	RAS-18FSN		32 A	40 A	
	RAS - 20FSN		37 A	40 A	
	RAS-22FSN		42 A	50 A	
	RAS - 24FSN		50 A	60 A	
	RAS-26FSN		54 A	60 A	
	RAS-28FSN		59 A	60 A	
	RAS - 30FSN		66 A	75 A	4/100/30
	RAS-32FSN		70 A	75 A	
FXN(E)	RAS-8FXNE		14 A	15 A	4/40/30
	RAS-10FXNE		17 A	20A	
	RAS-12FXNE		30 A	32 A	
	RAS-16FXN		33 A	40 A	4/63/30
	RAS-18FXN		32 A	40 A	
	RAS-20FXN		37 A	40 A	
	RAS-22FXN		42 A	50 A	
	RAS-24FXN		45 A	60 A	
	RAS-26FXN		54 A	60 A	
	RAS-30FXN		66 A	75 A	4/100/30
	RAS-32FXN		70 A	75 A	

9.7. H-LINK System

The H-LINK is the wiring connection system between units.

The H-LINK wiring system only needs:

- Two (2) transmission wires connecting each indoor unit and outdoor unit for up to 16 refrigerant cycles.
- Connection wiring for all indoor and outdoor units in series.

9.7.1. Application

The H-LINK system can be applied to the following models:

Indoor Unit		No.2 system	
RCI RCIM RCD RPI RPK RPF RPFI RPC	*System Free*	RAS-5~32FSN(E) RAS-8~32FXN(E) RAS-3~5FSVNE	*Set Free & Set Free Mini*

ATTENTION:
The H-LINK system cannot be applied to the models with the old cycle, nor to the units that have an old transmission.

NOTE:
CS-NET is an optional complementary software that can be applied to the system and which provides a total and centralized control of all the units.

9.7.2. Characteristics.

- The total wiring length is remarkably reduced with respect to traditional connections.
- Only one (1) connection is required for the wiring between the indoor unit and outdoor unit.
- The wiring connection of the complementary central controllers devices is easy.

ATTENTION:
For the H-LINK System you must use Twisted Shielded Pair Cable or Shielded Pair Cable.

9.7.3. Specifications

- Transmission cable: 2-Wire.
- Polarity of Transmission cable: Non-Polar Wire.
- Maximum quantity of Outdoor Units that can be connected: 16 Units per H-LINK System.
- Maximum quantity of Indoor Units that can be connected: 2 Units per cycle and 128 Units per H-LINK system.
- Maximum wiring length: total 1000m (including CS-NET).
- It is possible to increase the maximum wiring length up to 5000 m by using up to four PSC-5HR units.
  (Refer to subchapter 12.6 of this catalog)
- Recommended Cable shielded twisted pair cable, over 0.75mm² (Equivalent to KPEV-S).
- Voltage: 5V DC.

Example of H-LINK connection

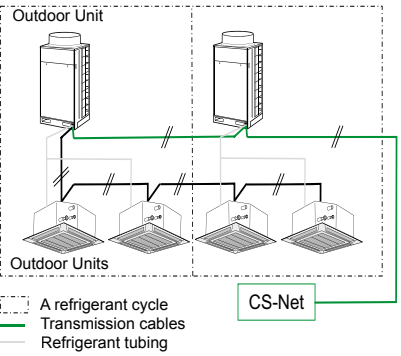

9.7.4. Setting of DIP Switches for the Units

DIP Switch setting of indoor PCB and Outdoor PCB.

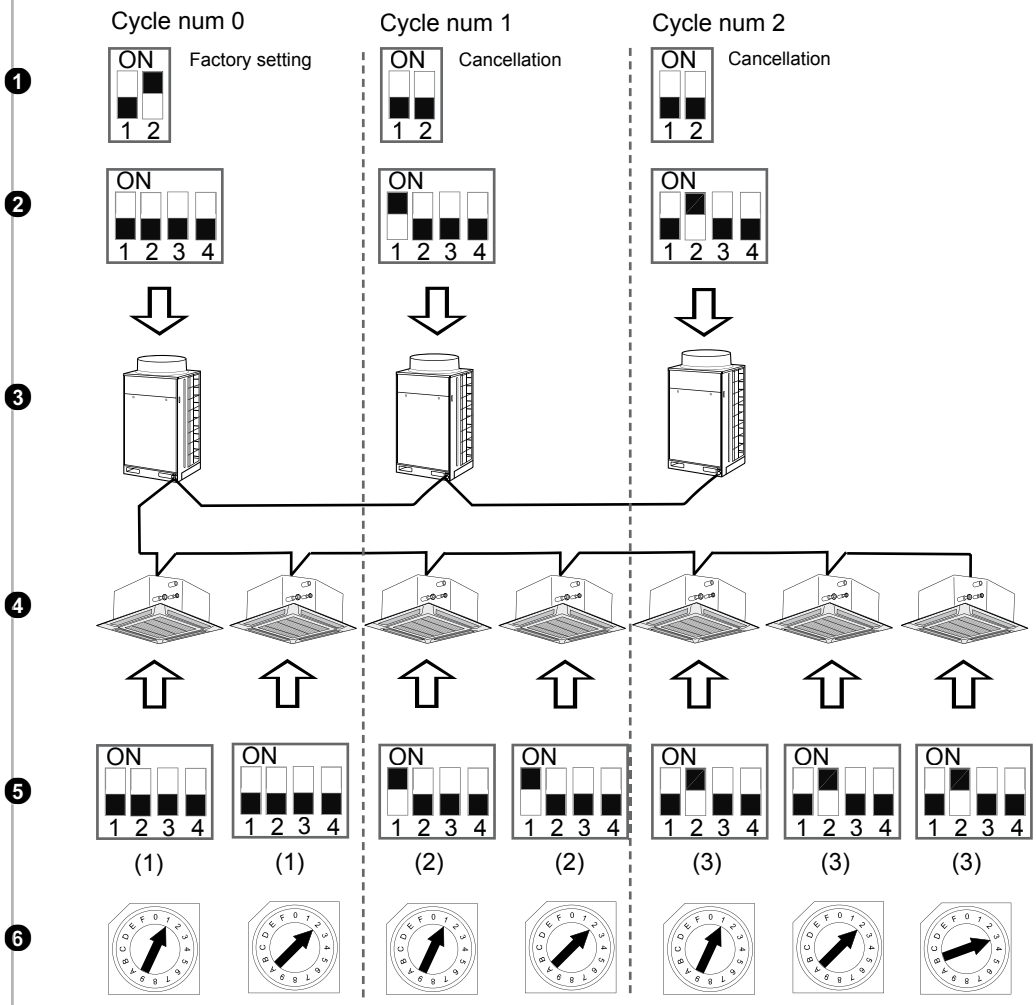

Mark	Indication Content
❶	DSW10 (end terminal resistance)
❷	DSW1 (refrigerant cycle)
❸	No.2 system
❹	Indoor Units
❺	DSW5 (refrigerant cycle)
❻	RSW (address of indoor unit)

For further information, refer to service manual SMXX0032

ATTENTION:
The maximum quantity of units to be connected is 16 outdoor units and 128 indoor units (including Utopia and/or Set-Free, Mini Set-Free and DC Inverter).

Do not install the wiring in a loop.

In the case that H-LINK is not applied when electrical wiring is performed, as shown above, H-LINK is applied after the instrument wiring is completed. Therefore, the dip switches are required to be set according to "Setting of Dip Switches on PCB".

9.7.5. Examples of H-LINK system:

Two cases:

(1) Using H-LINK System for air conditioning systems without a central control device (CS-NET or PSC-5S).

- Line Connection with all units (including Utopia and/or Set-Free, Reduced Set-Free and DC Inverter)

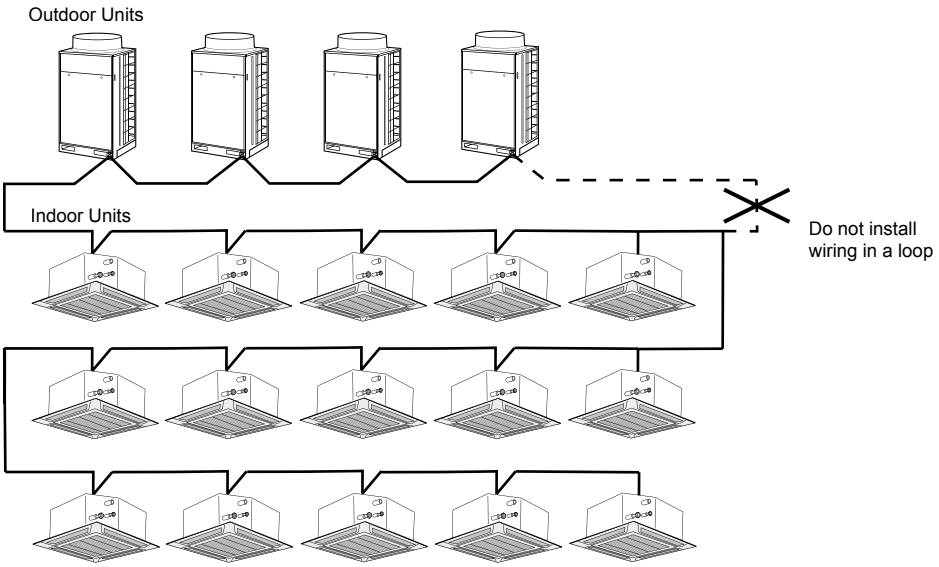

- Line connection for each floor

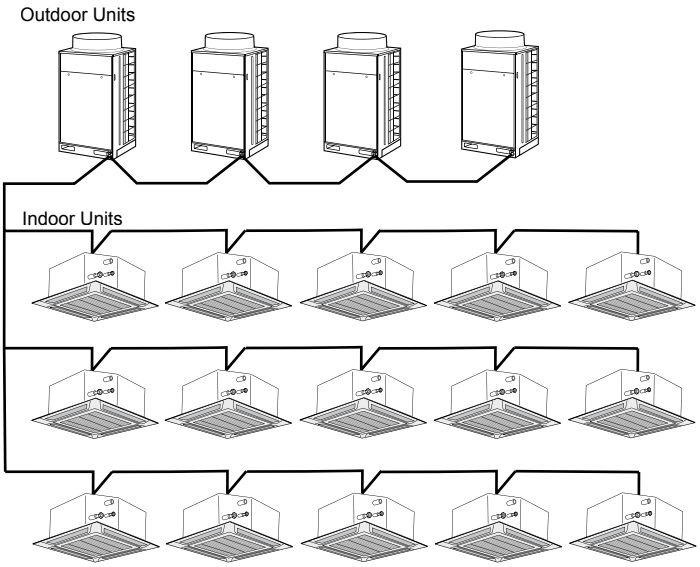

- Connection with one main line and with the branch lines for the units

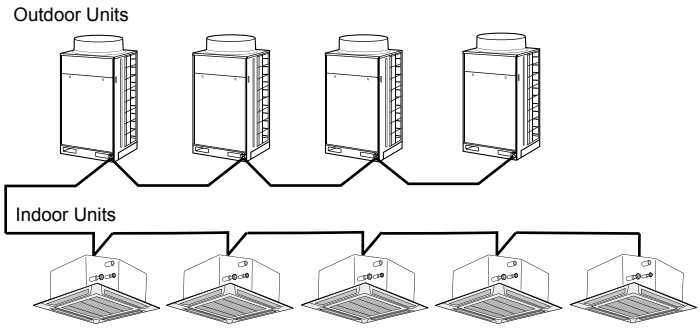

9

(2) Using H-LINK System for air conditioning systems with a central control device (CS-NET or PSC-5S).

- In case that the central control device is applied when electrical wiring is performed. In this case, the CS-Net Wiring can be connected at any point of the H-Link wiring.

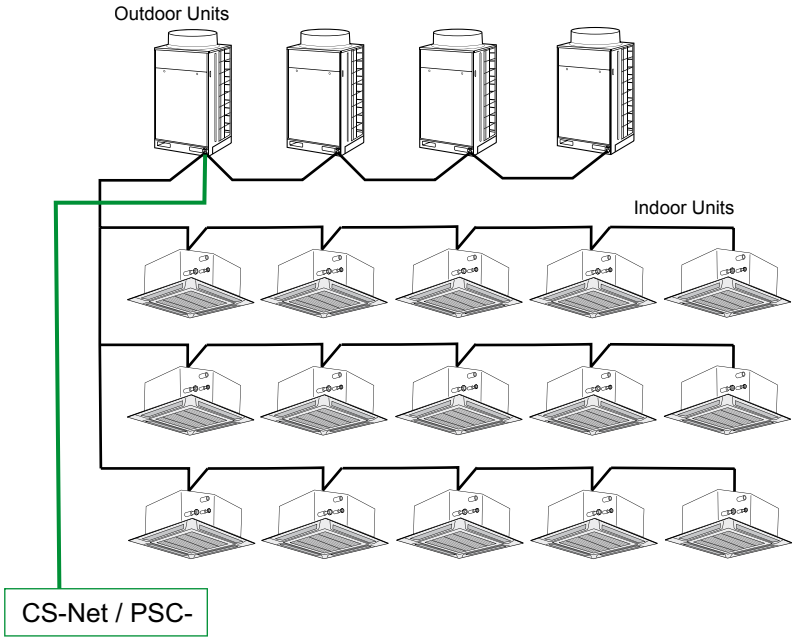

- In case that the central control device is not applied when electrical wiring is performed. In this case, you must connect the H-Link Wiring to all the systems. Usually, to connect the Outdoor Units is the easiest implementation.

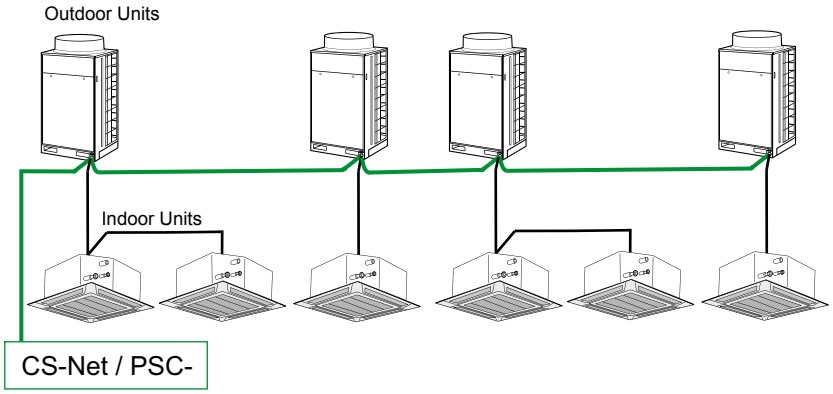

9.8. PSC-5HR

The PSC-5HR (H-link Relay) is an accessory that permits using CS-Net when the length of the system's wiring is greater than 1000 meters.

9.8.1. Example of a System with PSC-5HR

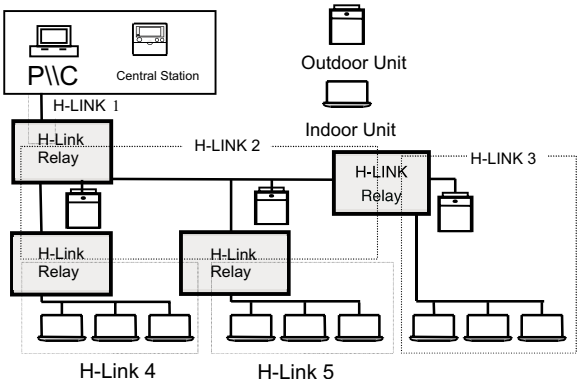

9.8.2. Internal Layout of the Components

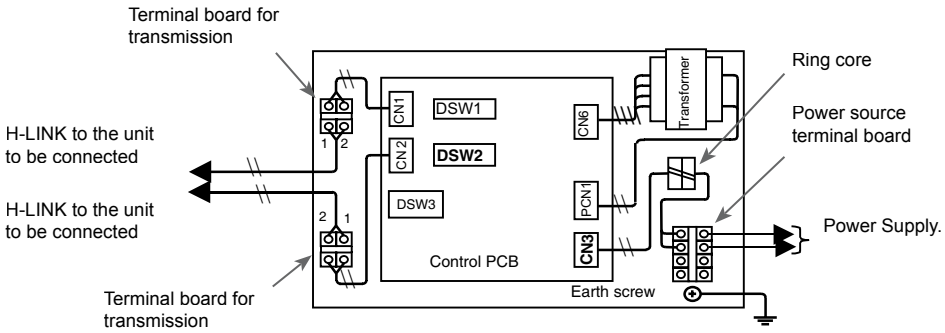

NOTE:

You can install a maximum of Four H-LINK relays in one system.

Make sure that the number of connections is the following:

- *Ref. System Quantity: maximum of 16*
- *Indoor Unit Quantity: within 128*

Total length of each H-LINK divided: up to 1000m

If the H-LINK is divided into five blocks as shown beside, set the end terminal resistance in each H-LINK relay.

CAUTION:

Make sure that the power source voltage is correct.

An incorrect wiring may cause a breakdown of the transformer PSC-5HR or the units

Specifically DO NOT connect the power source to the terminal board for transmission.

DO NOT install the H-LINK wires along the power supply wire, other signal wires, and others. If you install the H-LINK wires along those wires, there may be a malfunction due to the electrical noise. If you need to install the H-LINK wires near those wires, provide a distance of 15cm or more. Or alternatively, insert the wires into the steel pipe and ground one end of the pipe.

HITACHI
Inspire the Next

10. Remote Control Switches

This chapter shows the operation of the remote control switches that the new Hitachi SET FREE FSN(E)/FXN(E)/FSVNE series of machines uses.

Contents

10. Remote Control Switches 267

10.1. Wall Remote Control (PC-P1HE) 268

10.1.1. Operation Procedure for Cooling, Heating, Dry and Fan Operations 269
10.1.2. Operation Procedure for Temperature, Fan Speed and Air Louver Direction Setting 269
10.1.3. Operation Procedure for Time Guard 270
10.1.4. Operation Procedure for Ventilation 270
10.1.5. Operation Procedure for Automatic Cooling/Heating Operation 270
10.1.6. Procedure for Setting the Swing Louver 271
10.1.7. Indications when in Normal Condition 272
10.1.8. Indications in Normal Conditions 272

10.2. Optional Remote Controller (PC-P5H) 273

10.3. PC-LH3A Wireless Remote Control Switch 274

10.3.1 Operation Procedure 275
10.3.2. Receiver Kit 275
10.3.3. Operation for Multiple Indoor Units 276

10.4. Optional Wall 7-Day Timer (PSC-5T) 278

10.4.1. Setting Present Day and Present Time 279
10.4.2. Changing Weekly Schedule Pattern (A or B) 279
10.4.3. Time Setting for: Start/Stop 280
10.4.4. Setting for Running Day 281
10.4.5. Holiday Setting 281
10.4.6. Checking Contents of Setting 282

10.5. Optional Wall Central Station (PSC-5S) 283

10.5.1. Group Selection and Monitoring Unit Operation Status 284
10.5.2. Setting of Operation Mode 285
10.5.3. Setting of Temperature, Fan Speed and Louver Angle 285
10.5.4. Unit Operation 287
10.5.5. Prohibiting Operation by Remote Control Switch 287
10.5.6. Timer Operation 288
10.5.7. Other LCD Indications 288
10.5.8. Indication in Abnormal Conditions 289

10.6. Optional Accessories for RCS 290

10.6.1. Remote Control Cable (PRC-10E1~PRC-30E1) 290
10.6.2. 3P Connector cable 290

NOTE:
HITACHI products have different optional Remote Controls. Therefore, the user may request the Remote Control he needs. In the following pages, all possible functions and operations are explained. Please, refer to Chapter 4 (SM0032 rev1) to obtain information about installation and wiring connection.

CAUTION:
Press switches only with fingers. Do not press switches with any other item, as it may damage the switches.

10.1.Wall Remote Control (PC-P1HE)

Liquid Crystal Display
(L.C.D) Area

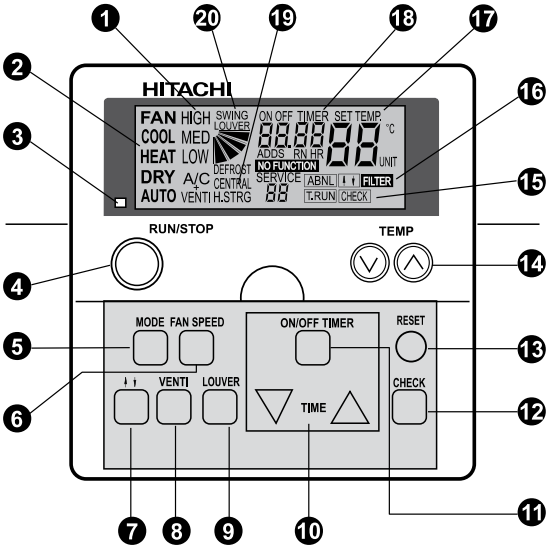

Model: PC-P1HE

◈ Features:

This device lets you control the unit's basic functions such as temperature and moisture, as well as a wide range of additional functions that will be described later in this chapter.
This device can control up to 16 indoor units with the same operation mode.

NOTE:

- *If LOW fan speed is selected and the outdoor temperature is higher than 21°C, excessive load is given to the compressor at heating operation. Therefore, set the fan speed to HIGH or MEDIUM, since safety devices may be activated.*
- *When the system is started after a shutdown longer than approximately 3 months, it is recommended that the system be checked by your service contractor.*
- *Turn OFF the main switch when the system is stopped for a long period of time. If the main switch is not turned OFF, electricity is consumed, because the oil heater is always energized during compressor stopping.*

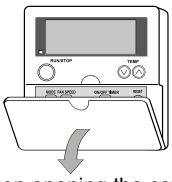

When opening the cover,
pull the cover in the direction of the arrow.

❶ Fan speed indicator
Ventilation indicator
Indicates the selected fan speed:
(high/medium/low)
Indicates if Total Heat exchanger has been selected.

A/C	air conditioning only
VENTI	only ventilation
A/C + VENTI	if both are selected

❷ Operation mode indicator
Indicates the operation mode selected: Fan, Cool, Heat, Dry, Auto (Cool/Heat)

❸ Run indicator (Red Lamp)

❹ RUN/STOP Switch

❺ MODE (Operation Mode Selection) Switch

❻ FAN SPEED (Fan Speed Selection) Switch

❼ Up & Down Panel Operation Switch

❽ VENTI (Ventilator Operation) Switch

❿ TIME (Time Setting) Switch
Increases and decreases the Set Time for timer operation

⓫ ON/OFF TIMER Switch
Used to activate or deactivate the timer operation.

⓬ CHECK Switch

⓭ RESET (Filter Reset Switch)
After cleaning the air filter, press the "RESET" button. FILTER indication

⓰ will disappear and the next filter cleaning time is reset. It also stops the run procedure.

⓮ TEMP (Temperature Setting) Switch

⓯ T.RUN (Test Run Indication)
Check (Check Indication)
These Tests appear when TEST RUN or CHECK is being performed

⓰ ABNML (Alarm)
Indicator FILTER Indicator

⓱ SET TEMP (Setting Temperature) Indicator

⓲ ON/OFF Timer (Timer Operation Indicator)
Alarm Code Indicator
NO FUNCTION Indicator

⓳ CENTRAL (Central Control Indicator Operation)
Indicates that central station or CS-Net is being performed.

⓴ Swing Louver Indicator
DEFROST Indicator

10.1.1. Operation Procedure for Cooling, Heating, Dry and Fan Operations

Before Operation:

Supply electrical power to the system for approximately 12 hours before start-up after long shutdown. Do not start the system immediately after power supply, it may cause a compressor failure, because the compressor is not heated well. Make sure that the outdoor unit is not covered with snow or ice. If covered, remove the snow or the ice by using hot water (less than 50°C).
If the water temperature is higher than 50°C, it will cause damage to plastic parts.

CAUTION

◈ Turn on the power supply.
Three vertical lines appear on the liquid crystal display A/C or VENTI is indicated on the liquid crystal display.

◈ Press the MODE switch.
By repeatedly pressing the MODE switch, the indication is changed in order of COOL, HEAT, DRY and FAN (In case of Cooling Only model, COOL, DRY and FAN).
(The figure shows when setting "COOL" mode is selected).

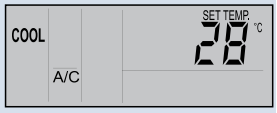

◈ Press RUN/STOP Switch.
The RUN indicator (Red) is ON. The system starts automatically.

NOTE:
Setting of Temperature, Fan Speed and Air Louver Direction.
The setting condition is memorized after setting once, therefore daily setting is not required.
In case that the setting is required to be changed, refer to "operation procedure for Temperature, Fan Speed and Air Louver Direction Setting".

◈ Turned OFF (STOP)
Depress the "RUN/STOP" switch. The RUN indicator turns off (red).
The system stops automatically.

NOTE:
There could be a case when the fan runs during approximately 2 minutes after the heating operation is stopped.

10.1.2. Operation Procedure for Temperature, Fan Speed and Air Louver Direction Setting

◈ DO NOT touch the CHECK switch.
The CHECK switch is used only when servicing.
In case that the CHECK switch is pressed by mistake and the operation mode is changed to the check mode, press the CHECK switch again for approximately 3 seconds, and press the CHECK switch once again after 10 seconds: operation mode is changed to normal.

ATTENTION

◈ Temperature Setting
Adjust the temperature by pressing TEMP ⌃ or ⌄ switch.
The temperature is increased by 1ºC by pressing switch ⌃ (máx. 86.00°F).
The temperature decreases by 1ºC by pressing switch ⌄ (min. 19°C in case of COOL, DRY and FAN mode, min. 17°C in case of HEAT mode). (The figure shows when setting temperature is 28 °C).

◈ Setting FAN Speed
Press the FAN SPEED switch.
When the FAN SPEED switch is pressed repeatedly, the indication changes in the rotation of HIGH, MEDIUM and LOW
For standard operation, set the fan speed at HIGH.
(The figure shows when setting MED speed).

NOTE:
In case of DRY mode, the fan speed is automatically changed to LOW, and can not be changed (However, the indication shows the present setting condition).

◈ Setting of Swing Louver Direction

Press the SWING LOUVER switch: the swing louver starts to swing. Press the SWING LOUVER switch again, the swing louver is fixed.
By repeatedly pressing the SWING LOUVER switch, the swing louver stops and swings successively.

◈ When Fixed

The indication shows the air flow direction.

◈ Auto Swing position

The indications move continuously corresponding to the louver swing.

NOTE:
In case of heating operation, the louver angle is automatically changed.

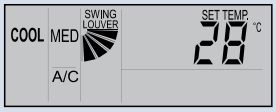

10.1.3. Operation Procedure for Time Guard

◈ Press the ON/OFF TIMER switch.

ON TIMER is indicated in case that the system is stopped.
OFF TIMER is indicated in case that the system is running.
(The figure shows when setting ON TIMER).

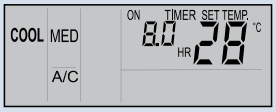

◈ Press the TIME switch Δ or ∇ and set the required time.

The time is increased by 30 minutes by pressing switch Δ (máx. 24 hours) and decreased by 30 minutes by pressing the ∇ switch (Min. 0.5 hours).
In case that the required time is not set, the set time is automatically set at 8.00 hours.
(The figure shows when setting 8.5 hours for timer operation)

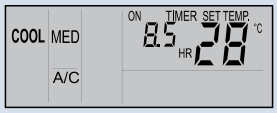

◈ Cancel setting

Press the ON/OFF TIMER switch again.

10.1.4. Operation Procedure for Ventilation

This function is available only when the total heat exchanger is connected.
When the procedures below are performed without the total heat exchanger connected, NO FUNCTION blinks for 5 seconds.

ATTENTION

◈ Ventilation

Press the VENTI switch
By repeatedly pressing the VENTI switch, the indication is changed in order of A/C, VENTI and A/C+VENTI.
(The figure shows the A/C + VENTI setting).

NOTE:
Contact your distributor or HITACHI dealer for detailed information.
If the mode is changed to VENTI during individual operation of the air conditioner, the air conditioner is stopped.
In case that the mode is changed to A/C during individual operation of the total heat exchanger, the total heat exchanger is stopped.

10.1.5. Operation Procedure for Automatic Cooling/Heating Operation

The automatic cooling/heating operation is required to be set by the optional function.
Contact your distributor or HITACHI dealer for detailed information.
This function is to change operation mode, cooling or heating automatically according to the temperature difference between the set temperature and the suction air temperature.
In the case that the suction air temperature is higher than the set temperature by 3°C, the operation is changed to COOL mode, and lower than the set temperature by 3°C, the operation is changed to HEAT mode.

NOTE:
In case of heating operation at the LOW fan speed, the operation often stops due to the operation of protective devices. In such cases, set the fan speed at HIGH or MED.
In case that the outdoor temperature is higher than approximately 21°C, the heating operation is not available.
The temperature difference between cooling and heating operation is quite big in case of using this function. Therefore, this function can not be used for the air conditioning of the room where requires accurate control of temperature and humidity.

10.1.6. Procedure for Setting the Swing Louver

Swing louver setting

1. When the SWING LOUVER switch is pressed, the swing louver starts its operation. The range of the swinging angle is approximately 70° from the horizontal position to the downward position. When the "◥" mark is moving, it indicates conitnous operation of the louver.

2. When the swinging operation of the louver is not required, press the SWING LOUVER switch again. The louver is stopped at an angle indicated by the direction of this mark "◥".

3. Discharge air angle is fixed (at 20° for RCI series and 40° for RCD series) during start-up of heating operation and defrosting operation when thermostat is ON. When the outlet air temperature reaches above 30 °C, swinging of louvers is started.

Fixing of Louver

1. In the case of cooling and dry operation, discharge air angle can be changed at 5 positions. In the case of heating operation, it can be changed at 7 positions

2. To fix the louver position, first press the SWING LOUVER switch to start the louver swinging, and then press the SWING LOUVER switch again when the louver reaches the required position.

3. Discharge air angle is fixed (at 20° for RCI series and 40° for RCD series) during start-up of heating operation and defrosting operation when thermostat is ON.. When the outlet air temperature reaches above 30 °C, swinging of louvers is started.

4. When the louvers are fixed at an angle 55° RCI, 65° RCD or 70° both during heating operation and the operation mode is changed to cooling operation, louvers will be automatically fixed at an angle of 45° RCI, 60° RCD.

NOTE:
There is a time lag between the actual angle of the louver and the liquid crystal indication. When the SWING LOUVER switch is pressed, the louver will not stop immediately. The louver will move one extra swing. If the louvers are moved due to cleaning or for any reason, set Auto Setting mode to place the four louvers in in the same position.

RCI (4-Way Cassette Type

Indication							
Louver Angle (approx.)	Aprox. 20°	Aprox. 25°	Aprox. 30°	Aprox. 35°	Aprox. 45°	Aprox. 55°	Aprox. 70°
Cooling / Dry	Angle Range						
Heating	Angle Range						

Angle Range
Recommended Angle

RCD (2-Way Cassette Type)

Indication							
Louver Angle (approx.)	Aprox. 40°	Aprox. 45°	Aprox. 50°	Aprox. 55°	Aprox. 60°	Aprox. 65°	Aprox. 70°
Cooling / Dry	Angle Range						
Heating	Angle Range						

Angle Range
Recommended Angle

RPK (Wall Type)

Indication							
Louver Angle (approx.)	Aprox. 35°	Aprox. 40°	Aprox. 45°	Aprox. 50°	Aprox. 55°	Aprox. 60°	Aprox. 70°
Cooling / Dry	Angle Range						
Louver Angle (approx.)	Aprox. 40°	Aprox. 45°	Aprox. 50°	Aprox. 55°	Aprox. 60°	Aprox. 65°	Aprox. 70°
Heating	Angle Range						

Angle Range
Recommended Angle

RPC (Ceiling Type)

Indication							
Louver Angle (approx.)	Horizontal	Aprox. 15°	Aprox. 30°	Aprox. 40°	Aprox. 50°	Aprox. 60°	Aprox. 80°
Cooling / Dry	Angle Range						
Heating	Angle Range						

Angle Range
Recommended Angle

Do not turn the air louver by hand. If moved, the louver mechanism could be damaged! (In all units)

CAUTION:

◈ Wall Type (RPK):
Adjust the vertical deflectors by hand to discharge air in the required direction.
Do not swing 1 blade at left side and 2 blade at right side of the vertical deflection.

◈ Automatic Setting of louver
When the unit operation is stopped, two air louvers are stopped at closing position automatically.

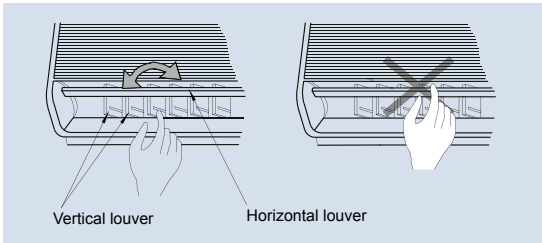

◈ Ceiling Type (RPC):
The vertical deflector consists of four sets of deflectors. Adjust the vertical deflectors by hand to discharge air in the required direction.

NOTE:
For models without automatic swing louver the above indications are not available through R.C.S. The swing Louver should be adjusted by hand in this case.

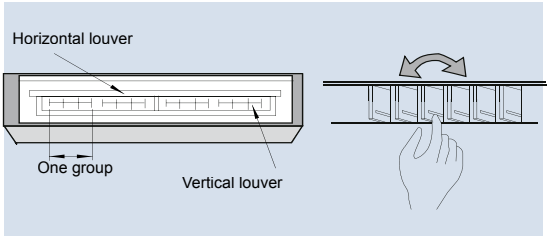

10.1.7. Indications when in Normal Condition

◈ Thermo-controller

When the thermo-controller is operated, the fan speed is changed to LOW, and the indication is not changed. (Only in the heating operation)

◈ Defrosting

When the defrost operation is performed, DEFROST indication is ON.
The indoor fan is slowed down or stopped (depends of selection)
The louver is fixed at the horizontal or 35° position. However, the louver indication of LCD continues to activate.
(The figure shows when setting DEFROST is ON).

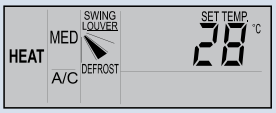

When the unit is stopped during defrost operation, the RUN indicator(Red) is OFF.
However, the operation continues with DEFROST indication, and the unit is started after the defrost operation is finished.

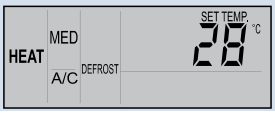

◈ Filter

Filter Clogging: The FILTER indication is ON when the filter is clogged with dust, etc.
Clean up the filter: Press the RESET switch after cleaning the filter. The FILTER indication is OFF.

10.1.8. Indications in Normal Conditions

◈ Abnormal

The RUN indicator (red) flickers.
"ALARM" is indicated on the liquid crystal display.
The indoor unit number, the alarm code and the model code are indicated on the liquid crystal display.
In the case that the plural indoor units are connected, the above items for each indoor unit are indicated one by one.
Check the contents of the indications and contact yourHITACHI service contractor.

◈ Power Failure

All the indications are OFF.
Once the unit is stopped by power failure, the unit will not be started again although the power recovers. Perform the starting procedures again.
In case of power failure within 2 seconds, the unit will be started again automatically.

◈ Electric Noise

There could be a case that all the indications are OFF and the unit is stopped. This is occurred by the activation of the micro computer for the unit protection from the electric noise.

NOTE:
If the wireless remote control switch is used for the wall type indoor unit, remove the connectors (CN25) connected to the indoor PCB. If not removed, the unit can not operated.
The memorized data can not be erased unless the remote control switch is initialized.

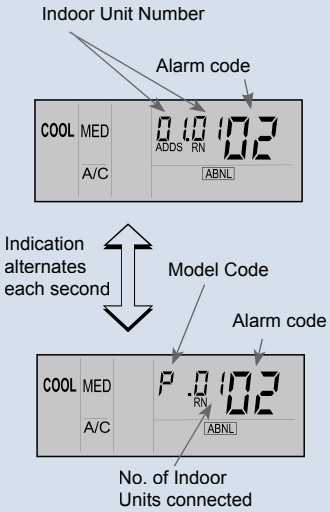

Model code	
Indication	**Model**
H	Heat pump
P	Inverter
F	Multi
C	All Cool
E	Others

10.2.Optional Remote Controller (PC-P5H)

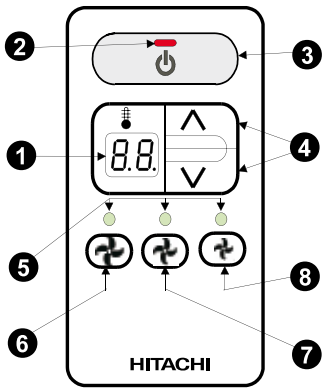

Model: PC-P5H

◈ Features:
This device (with cable) lets you control all of the unit's basic functions.

NOTE:
- *Swing Louver Setting is not available. Select by Central Station or other remote control switch.*
- *Default: Auto Swing.*
- *If the remote control switch is defined in not available mode from the central station, the setting is not available.*

❶ Temperature indication
❷ RUN LED (red)
❸ RUN/STOP Switch
❹ Temperature Setting Switch
❺ FAN SPEED (Green)
❻ FAN SPEED Switch Hi Speed
❼ FAN SPEED Switch medium speed
❽ FAN SPEED Switch: low speed

◈ **To Start**

1.- When turning ON the indoor unit, initial process will start.

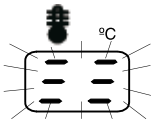

2.- Set at your required temperature by pressing the ❹ switch.
The set temperature is indicated on the ❶ display.

3.- Select one of the fan speed by pressing the ❻, ❼, ❽ switches.
The set fan speed is indicated by the green LED❺.

4 - Press Switch ❸. The red LED turns on ❷.

◈ **Stoppage**

1.- Press the Switch ❸. Air Conditioning is stopped and all the LEDs are turned OFF. In order to restart, press switch ❸.

10.3.PC-LH3A Wireless Remote Control Switch

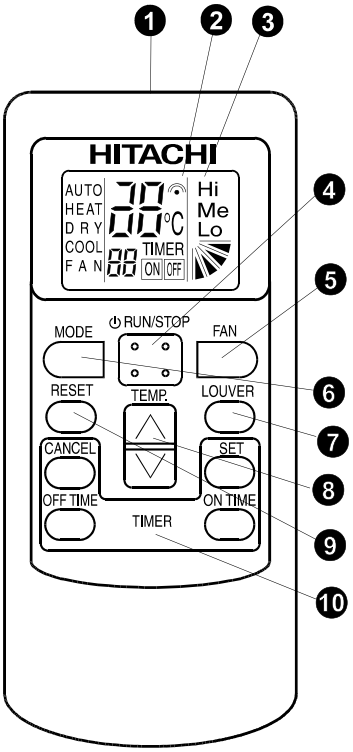

Model: PC-LH3A

◈ Features:

This device is used to send operation mode, timer setting, etc. commands to the indoor unit. Face the transmitter of the controller toward the receiver of the indoor unit and press the switch of required operation so that commands (by infrared rays) are sent to the indoor unit. The distance for transmitting is approximately 6 meters as a maximum. (The appropriate distance for transmitting will get shorter if the transmitting angle is not vertical to the receiver or an electronic type light is used in the room, etc.).

❶ Transmitter

Point the transmitter towards the receiver of the indoor unit when sending commands. The Transmitting indication on the liquid crystal display flashes when sending commands.

❷ Transmission indication

❸ Liquid Crystal Display Indication

The set temperature, timer operation, position of air louver, operation mode, air flow mode, etc. are indicated.

The diagram of the display shown on the left is for explanation purposes only. The display will differ during actual operation.

❹ ON/OFF Switch

Operation of the unit can be started or stopped by pressing this switch.

❺ Fan speed switch

Press this switch to select the fan speed. By repeatedly pressing the button, the setting will change sequentially through HIGH, MED and LOW. (Fan speed is fixed at low for dry operation).

❻ MODE Selection Switch

By repeatedly pressing the mode switch, the unit cycles through the different operating modes in the order of: HEAT, DRY, COOL and FAN. To select auto operation, press the switch for more than 3 seconds. If the switch is pressed again, it will return to FAN mode.

❼ Louver Angle Switch

The airflow angle and auto-louver operation can be set by this switch. When pressing the switch, the angle is changed in the following order. (In cool or dry operation modes, steps 1-5 and Auto swing are available).

❽ TEMP Switch

The setting temperature can be adjusted using the switch.

❾ Reset Switch

(1) Press RESET to turn off the filter indicator lamp after filter cleaning.

(2) If the unit is stopped abnormally due the protection devices etc... press the RESET switch to cancel the control stoppage after the cause of abnormality has been removed.

❿ TIMER Switches:

Four switches control the timer operation.

The set time can be changed by pressing ON TIME or OFF TIME and is set by pressing the SET switch. Timer operation can be cancelled using CANCEL.

10.3.1 Operation Procedure

When operating the controller, face the transmitter toward the receiver of the indoor unit and press the switch for the required operation as followings.
The operation commands are sent by pressing the required operation switch by facing the transmitter of the controller toward the receiver of the indoor unit.
When the commands are sent, the "⊙" of the LCDof the remote control flickers once.
The indication lamp (yellow) on the receiver part of the indoor unit turns ON for an instant when the indoor unit receives the commands.

ATTENTION:
In case that the indication lamp (yellow) does not turn ON although the commands are sent, the commands are not received by the indoor unit. In such a case, send the commands again.
The transmitter of the controller must be oriented vertically in relation to the receiver, and the permissible angle for transmitting is 50°. However, the appropriate distance for transmission is halved when the angle is 50 degrees, and is also reduced when electronic type lighting is used in the room.
In case that two indoor units are installed side by side, the commands from the controller may be received by both indoor units. The function to identify each indoor unit is not applicable.

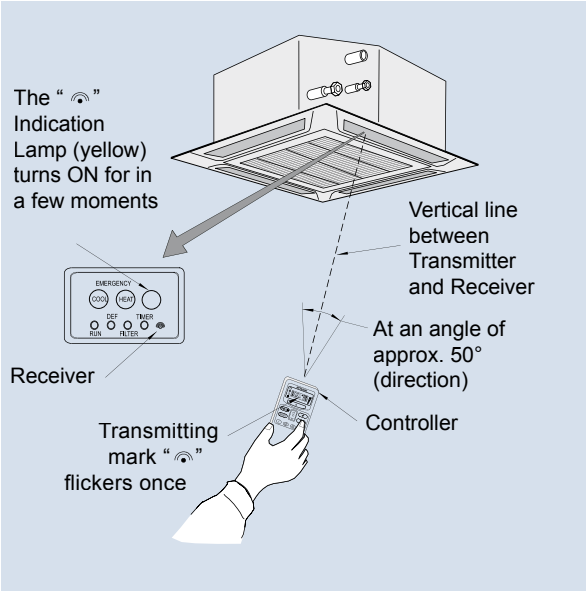

10.3.2. Receiver Kit

One of these receiver Kits is required for indoor units to receive the signal when using wireless remote control switch (PC-LH3A).

Compatible Models:

Model	On the Wall	On the Panel
RCI-(1.0~6.0)	PC-RLH11	PC-RLH8
RCIM-(1.0~2.0)		PC-RLH13
RCD-(1.0~5.0)		PC-RLH9
RPC-(2.0~6.0)		-
RPI-(0.8~10.0)		-
RPK-(1.0~4.0)		-
RPF(I)-(1.0~2.5)		-

NOTE:
In case another Remote Controller is used together with PC-RLH8/9/11/13, one of them must be set as Sub, setting pin 1 of SW3 to ON (see next page)

◈ PC-RLH8

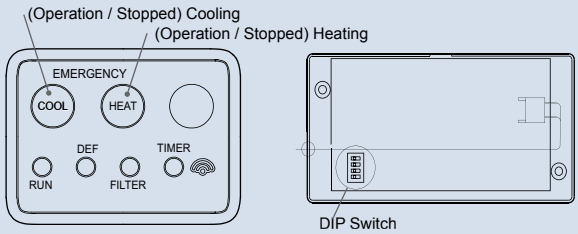

◈ PC-RLH9

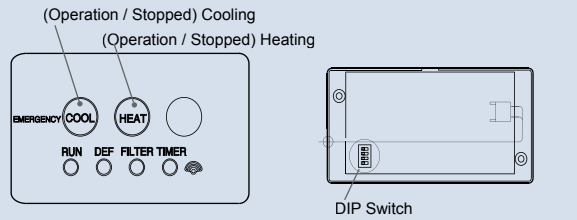

◈ PC-RLH11

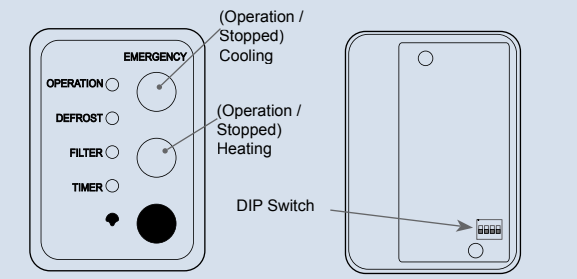

◈ PC-RLH13

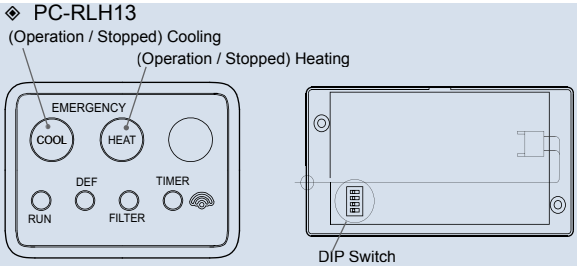

10.3.3. Operation for multiple Indoor Units

◈ Installation of Control for Multiple Units

In case of operating multiple indoor units (Max. 16 units) simultaneously by a single control (wireless or remote), the receiver kit or the remote controller should be applied only to the unit for operation, and the other units should be without receiver kit or remote controller (for wired control). If plural receiver kits for control are required to be used, max. two receiver kits or remote controllers can be installed.

If two controllers are used, set Main and Sub for receiver kits or remote controllers by the following procedures.

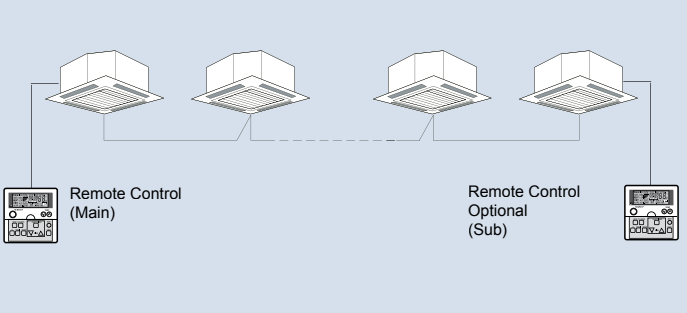

NOTE:

- *It is also possible to combine a remote controller and a Wireless Controller with the same group of Units.*
- *RPK units cannot be connected simultaneously with built-in Receiver. If multiple RPK wants to be used simultaneously by a single control, PC-RLH11 should be installed. If you want tu use several RPK units simultaneously with only one remote control switch, you must use a PC-RLH11 or other remote control switch.*

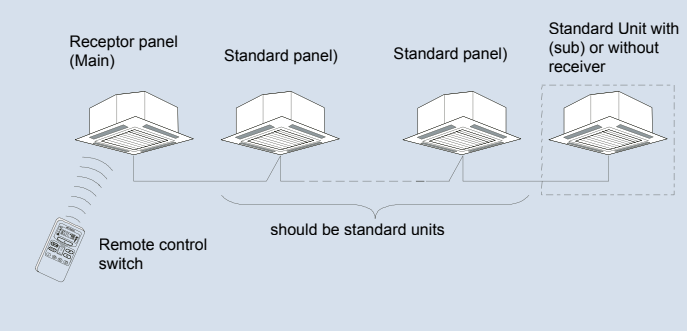

ATTENTION:

Turn OFF all the power sources before procedures such as wiring, setting the rotary switch, etc.

◈ Setting of Sub receiver kit for Remote controllers

PC-P5H:

1. Press the check (⚙) (⚙) and (⚙) switches simultaneously for more than 3 seconds.
2. Press (⚙) three times till Mode Number is "5".
3. Press switch ⌃ ⌄ to set the suitable number as showed in the picture beside (Sub or Main).

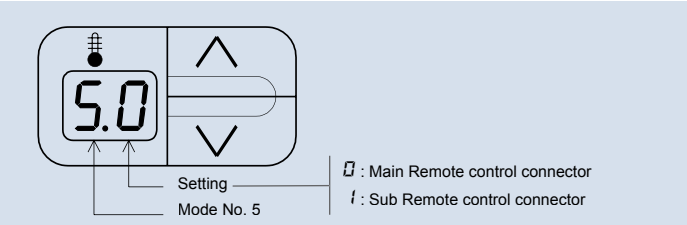

When this setting is changed, cut off the power supply of all indoor units after returning the normal mode

PC-P1HE:

1. Press the CHECK switch and the RESET switch simultaneously more than 3 seconds to access the optional setting mode.
2. Press ⌄ or ⌃ and define the service to 01.
3. Press the CHECK switch.
4. Select code F2 by pressing the TIME switch ⌄ o ⌃.
5. Press switch ⌃ ⌄ to set the suitable number as shown in the picture (Sub or Main).

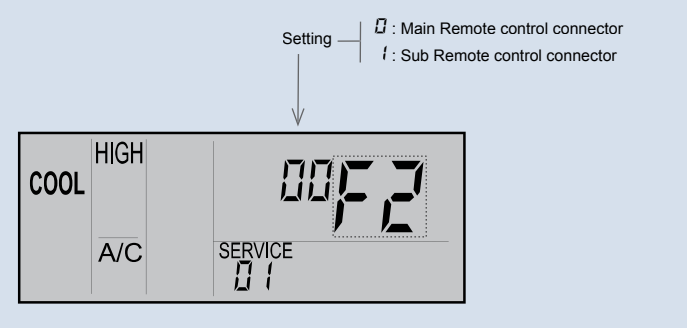

◈ Setting of Sub receiver kit for Wireless control

PC-RLH8/9/11/13:

1. Remove rear cover.
2. Set pin No. 1 of Dip Switch SW3 to ON.

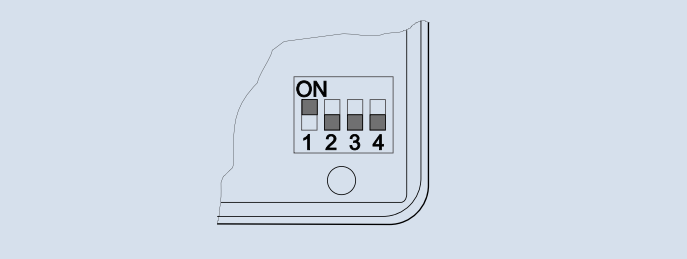

NOTE:

Refer to Service Manual (SMXX0032) for more information about setting of "sub" for controllers.

◈ Wiring Procedures between Indoor Units

1. Perform the wiring work as follows.
The total length of the cable must be within 500 meters.

Cable references are shown below:

PC-RLH8/9/11	PRC-10E1	PRC-15E1	PRC-20E1	PRC-30E1
Cord length	10m	15m	20m	30m

2. Fix the connecting control cable between indoor units at certain points with bands not to run along the power supply cable inside of the indoor unit.
You must perform the same wiring outside the indoor unit. Keep a distance of more than 30 cm between the control cable and the power supply cable, or ground one end of a conduit tube after inserting the control cable in the metal conduit tube.

3 Set the RSW switches on the printed circuit board in the electrical box of each indoor unit as shown in the next figure.

4. Check the number of Indoor Units Connected when running the test.

NOTE:
The 7-segment indication of the receiver part and the remote controller shows the number of the indoor units connected in case that the test running is performed by the controller. However, the number can not be indicated for some models. In such a case, check the number by the wired controller PC-P1HE.

WARNING:
Turn OFF all the power source before the following procedures such as wiring, setting the rotary switch, etc.
Rotary switch must start in 1.

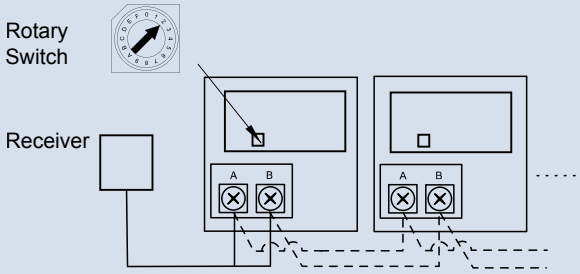

RSW Setting

1st unit	2nd unit	3rd unit	4th unit
5th unit	**6th unit**	**7th unit**	**8th unit**
9th unit	**10th unit**	**11th unit**	**12th unit**
13th unit	**14th unit**	**15th unit**	**16th unit**

10.4. Optional Wall 7-Day Timer (PSC-5T)

Liquid Crystal Display
(L.C.D) Area

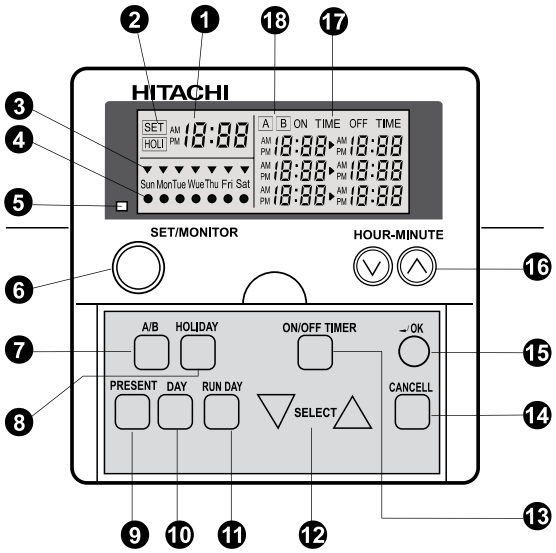

Model: PSC-5T

◈ Features:

With this device you can control the daily on/off operation of the unit throughout the week.
This device is a complement for the devices that do not include functionality (PC-P1HE / PC-P5H / PC-P5S).

◈ Functions:

1. ON/OFF setting time in a week
2. ON/OFF setting in available three (3) times a day
3. OFF setting for special Holiday day
4. Indication of Present Time
5. Running time is indicated

NOTE:
The current time and the ON/OFF setting time are indicated in 12 hours units (AM 00:00-11:59, PM 00:00-11:59)

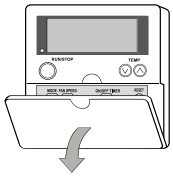

When opening the cover,
pull the cover in the direction of the arrow.

❶ Indication of Current Time

❷ Indication of Setting Time and Holiday
This indicates the Operation Mode, SET or MONITOR, and the Holiday if it is selected.

❸ Indication of Current Day of the week

❹ Indication of Running Day of the week
Whenever the running day is set, this light is on.

❺ Run indicator (Red Lamp)

❻ Operation Mode Change Switch (SET/MONITOR)
By depressing this switch the control timer is changed to the setting mode, the SET indication is turned on and the ▼ mark flickers.
By depressing again, the SET mode is turned off and the setting mode is changed to monitor mode.

❼ Change Switch of Setting Pattern (A/B)
There are two (2) patterns (A and B) set for the weekly schedule.
Each pattern can be set with three (3) times ON/OFF setting for each day of the week.
By pressing this switch the activated pattern (A or B) is selected.

❽ Holiday Setting Switch
By pressing this switch when the SET indication is on, the HOLI indication is turned on and the selected day is set as a holiday.
Depressing it again, the holiday setting is canceled.

❾ Setting Switch of Current time
By pressing this switch the SET indicator and ▼ mark flicker and current time can be set.

❿ Setting Switch of Day of a Week
Day of week is selected by this switch when SET display is flickering or indicated.
Depressing this switch, the ▼ mark moves in the order of “Sun > Mon > ... > Sat. By pressing the DAY after Sat, all the ▼ marks are selected. If you press again, the ▼ mark goes back to Sun.

⓫ Setting Switch of Running Day (RUN DAY)
By pressing the RUN DAY switch, the selected day is set as the running day and the ● mark is turned on. Pressing again it is turned off and the selected day is cancelled

⓬ Change Switch of SELECT Setting
By pressing the SELECT switch the 1, 2 or 3 of ON TIME and OFF TIME is selected.

⓭ Change Switch of ON/OFF TIMER Setting
When SET display is flickering, by depressing the ON/OFF TIMER the timer is changed to the ON/OFF time setting mode and the hour indication of ON TIME flickers.

⓮ CANCEL Switch of Setting Time
By pressing this switch when timer is set, the indication of ON TIME or OFF TIME is changed to -.--.

⓯ OK Switch
By pressing this switch the selection on setting process is accepted.

⓰ Setting Switch of HOUR-MINUTE
By pressing ⌃ or ⌄, the hour and minutes are set, when indicated, or SET flickers.

⓱ Indication of ON TIME and OFF TIME Setting
It indicates the setting conditions of the selected day

⓲ Indication of Weekly Scheduled Pattern (A or B)

10.4.1. Setting Present Day and Present Time

◈ (<Example> current Day: Friday, Present Time: 5:15 PM).

During the setting mode, the setting of the present time is not available when depressing the PRESENT switch more than 3 seconds.

ATTENTION

1. Supply power to the unit

WARNING:
Supply power the unit more than 12 hours before unit operation for compressor protection. Do not cut off power during the term of using air conditioner

The on the right figure shows current time at AM 0:00 on Sunday. (When the power is turned ON, the present time is not set.).

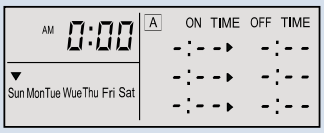

2. Depress the PRESENT switch for more than 3 seconds.

The display to current time setting mode, and the SET indicator and the ▼ mark flicker.
The figure on the right shows a case where neither the ON time nor the OFF time are set.

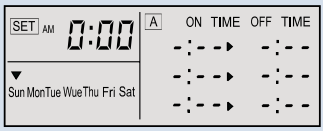

3. Set the ▼ mark to the current day by pressing the DAY switch.

Press the OK switch after setting the current day, the ▼ mark is turned on and the hour indication flickers.
The right figure shows the case of setting the day at Friday.

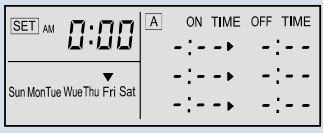

4. Set hour indication to the current hour by pressing the HOUR/MINUTE ⌃ or ⌄ switch.

Press the OK switch after setting the current hour, the hour indication is turned on and the minute indication flickers.
The right figure shows the case of setting the hour at PM 5.

NOTE:
AM 12:00 is displayed as PM 00:00

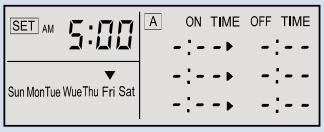

5. Set current minute indication by pressing the HOUR/MINUTE ⌃ or ⌄ switch.

Press the OK switch after setting the current minute; the current day and time are fixed, and the current time setting mode is changed to the monitor mode. The minute indication is turned on and the SET indication is turned off.
The figure on the right shows the case of setting the minute to 15.

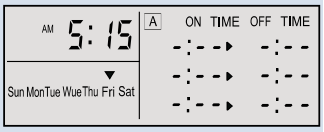

10.4.2. Changing Weekly Schedule Pattern (A or B)

There are 2 (two) patterns (A or B) set for the weekly schedule.
Each pattern can be set with 3 (three) times ON/OFF settings for each weekly day.
<Function>
- To select the mode for setting and operating the schedule.
- The schedule of A or B pattern can be set for each week and changed for a season.

1. Depress the SET/MONITOR
The control timer is changed to the setting mode and the SET indication is turned on.

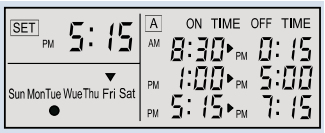

2. Depress the A/B switch.
The set pattern is changed (from A to B) by pressing the A/B switch.
The figure on the right shows the case of selecting set pattern B.

3. Depress the SET/MONITOR
The SET mode is turned off and the setting mode is changed to the monitor mode.

10.4.3. Time Setting for: Start/Stop

(<Example> A pattern, Friday, Setting 2, PM 1:00 (ON) / PM 5:00 (OFF)

In case that the remote control switch (PC-2H2) is used together, both setting of ON TIME and OFF TIME are required for setting 1, 2 and 3. (The setting of ON TIME (or OFF TIME) only is not available).
In case that the central station (PSC-5S or PC-P1H) is used together, the setting of ON TIME (or OFF TIME) only is available.

ATTENTION

1. Depress the SET/MONITOR

   The control timer is changed to the setting mode, the SET indication is turned on and the ▼ mark flickers.
   The figure on the right shows the case of changing to the setting mode.

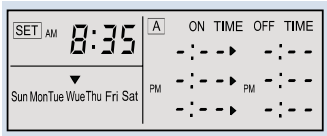

2. Select A or B pattern by depressing the A/B switch.

   Refer to “B”. Changing weekly Schedule pattern A or B for changing the pattern

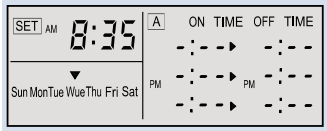

3. Select the weekly day to set ON/OFF control by depressing the DAY switch

   By pressing the DAY switch, the flickering ▼ mark moves in the order of “Sun ⑭ Mon ⑭ ... ⑭ Sat. When you press DAY after Sat., all of the ▼ marks flicker (from Sun to Sat). In this case, the setting is the same for all days of a week.
   By pressing the DAY switch once again, the flickering ▼ mark returns to the Sun position.

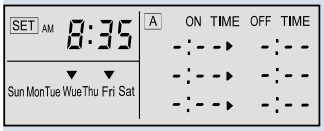

4. Depress the ON/OFF TIME switch.

   The Timer is changed to the ON/OFF time setting mode and the ON TIME indication flickers.
   The right figure shows the case of changing to the ON/OFF time setting mode

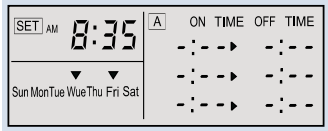

5. Select setting 1,2 or 3 by pressing the SELECT switch.
   By pressing the SELECT switch, the hour indication flickers.
   The right figure shows the case of selecting the setting 2.

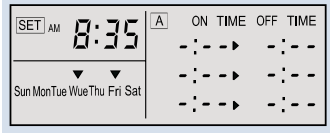

6. Set the ON TIME hour indication by pressing the HOUR/MINUTE ⌃ or ⌄ switch..

   After setting the hour indication, press the OK switch and the minute indication of ON TIME to be set flickers.
   The figure on the right shows the case of setting the hour to PM 1:--

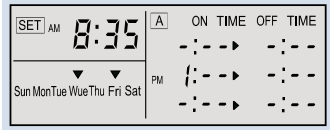

7. Set the minute indication of ON TIME by pressing the HOUR/MINUTE ⌃ or ⌄ switch.

   After setting the minute indication, depress the OK switch and the hour indication of OFF TIME to be set is flickered.
   The right figure shows the case of setting the hour PM 1:00:00 AM.

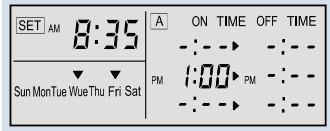

8. Set the time of OFF TIME by the same procedure of setting the time of ON TIME

   After setting the time of OFF TIME, the flickering indication of OFF TIME is turned on and the ON/OFF time setting mode is changed to the setting mode.
   The figure on the right to shows the case of setting the hour to PM 5:00.

9. Press the SET/MONITOR switch.

   The SET indication is turned off and the control timer is changed to the monitor mode.
   The right figure shows the case of indicating the setting condition of the present day.

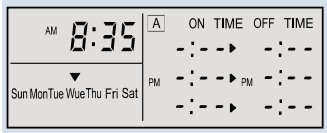

By Pressing the CANCEL switch when setting ON time (procedure 6) or OFF time (procedure 8), the indication of ON TIME or OFF TIME is changed to :. Pressing the “OK” switch in this condition cancels the setting.

ATTENTION

10.4.4. Setting for Running Day

<Function>
To set the day for actual operation of the running schedule set before. (Although the ON time and OFF time are set, the schedule operation is not available unless the running day is set.)

(<Example> B pattern, Tuesday

1. Depress the SET/MONITOR

   The timer is changed to the setting mode, the SET indication is turned on and the ▼ mark flickers.

2. Select A or B pattern by depressing the A/B switch.

   The figure on the right shows the case of selecting set pattern B.

3. Select the running day by depressing the DAY switch.

   Refer to step 3. “Setting ON/OFF Time” for the indication of the ▼ mark.
   The figure on the right shows the case of selecting Tuesday.

4. Press the RUN DAY switch, the selected day is set as the running day and the ● mark is turned on at the selected day.

   By pressing the RUN DAY switch again, the running day setting is canceled and the ● mark is turned off.
   The figure on the right shows the case of selecting Tuesday.

5. Depress the SET/MONITOR

   The SET indication is turned off and the control timer is changed to the monitor mode.

10.4.5. Holiday setting

<Function> To cancel the running schedule temporarily.
The schedule operation is canceled only once at the day set as “holiday”. After that, the schedule operation is available again. This function is used if there are any irregular holidays.

(<Example> B pattern, Tuesday

1. Depress the SET/MONITOR

   The timer is changed to the setting mode, the SET indication is turned on and the ▼ mark flickers.

2. Select A or B pattern by depressing the A/B switch.

   The figure on the right shows the case of selecting set pattern B.

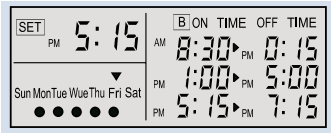

3. Select the day to be set as holiday by depressing the DAY switch.

   Refer to step 3. “Setting ON/OFF Time” for the indication of the ▼ mark.
   The figure on the right shows the case of selecting Tuesday.

4. Depress the HOLIDAY switch, the HOLI indication is turned on and the selected day is set as holiday.

   If the selected day is not set as running day, the ● mark turns off. The holiday setting is not available for the day. (If all days of a week are selected, only the running day is set as a holiday).
   By pressing the HOLIDAY switch again, the holiday setting is canceled.

5. Press “SET/MONITOR”.

   The “SET” indication is turned off and the control timer is changed to the monitor mode.

If the current day is set as a as holiday, the holiday setting is available from that time and the scheduled operation is canceled until the next day. In that case, the same day after a week is not “holiday”.

ATTENTION

10.4.6. Checking Contents of Setting

1. Press the DAYwith the switch in monitor mode (when the SET indication is turned off);

   The ▼ market moves and the setting contents of the day with the ▼ mark is indicated.
   The figure on the right shows the case of selecting Tuesday.

CAUTION:
The control timer has a built-in back-up battery and the clock function is available during 2 weeks in case of power failure.
If the power failure continues more than 2 weeks, set the current time again.
The RUN indicator is turned on at ON time and turned off at OFF time.
If the indoor unit operation is started or stopped by the remote control switch or the central station used together with the timer, the RUN indicator is not changed.
The flickering of the RUN indicator shows an abnormal condition of the Timer.
Check to ensure that the wiring connection and the setting of DIP switches are correct.
If the RUN indicator is still flickered after checking, contact your distributor or HITACHI dealer.

CAUTION:
It may take approximately 15 seconds to start (or stop) operation after ON time (or OFF time) according to the controller used together.
Operation cannot start nor stop when in setting mode.
After completing setting, activate the timer control mode. (After the timer has been in setting mode during three minutes, it will automatically change to monitor mode).
In the case that the Timer is used with the central station (PSC-5S), the setting by the central station is required. Refer to next section 10.5 and section 4.3 in Service Manual (SMXX0032) of the central Station for more details.

10.5.Optional Wall Central Station (PSC-5S)

Liquid Crystal Display
(L.C.D) Area

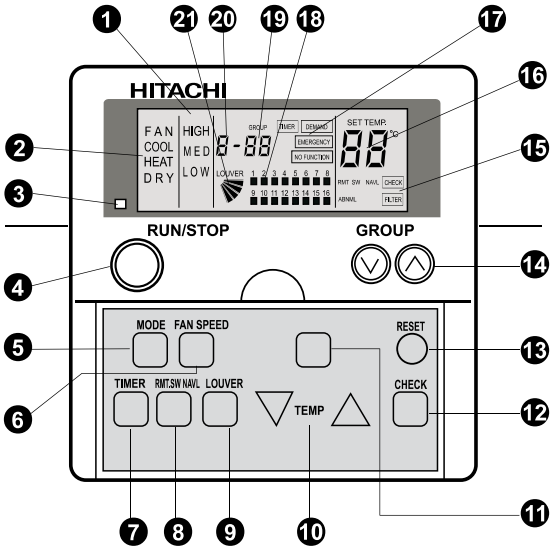

Model: PSC-5S

◈ Features:

This device lets you control all of the unit's basic functions such as temperature and moisture as well as other additional functions that are described below in this chapter.
This device can control up to 64 indoor units, with the possibility of grouping them in four different function modes.

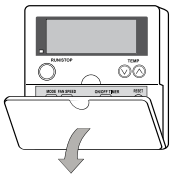

When opening the cover,
pull the cover in the direction of the arrow.

1. Fan speed indicator
Indicates the selected fan speed for the group shown: High/Medium/Low.

2. Mode indication
It indicates the operation Mode selected for the group shown: FAN, COOL, HEAT, DRY.
Automatic mode is available if this function is activated.

3. Run indicator (Red Lamp)

4. ON/PFF switch
Changes the Operation Status of each unit, ON/OFF.

5. Operation mode selection switch
FAN, COOL, HEAT, DRY

6. Fan speed selection switch
HIGH, MEDIUM, LOW

7. Timer selection switch
By pressing this switch, the signal from the Control Timer (PSC-5T) schedule is available and the TIMER indication is turned on. Pressing again, TIMER is turned off and the schedule is not available.

8. RMT.SW AVL/NAVL switch
By pressing this switch, control by each Remote Control is prohibited or not.
When RMT.SW NAVAL is indicated the Remote Control Switch is prohibited

NOTE:
When monitoring mode is selected, the above mentioned operation modes and setting temperature are indicated.

9. LOUVER (Swing Louver Operation) Switch
By pressing this switch the swing louver position or operation is selected.

10. Temperature Setting Switch

11. This Switch is not used.

12. Check switch
By pressing this switch, CHECK is indicated and Master or Slave unit can be set.

13. RESET switch
By pressing this switch, the CHECK function is canceled. The FILTER indication can be turned off too.

14. Group selection switch
By pressing this switch, the group number to be controlled is changed from 01 to 16. After 16, AA is shown, and then all the units are controlled simultaneously. Pressing again, 01 is shown and the sequence starts again.

15. CHECK, FILTER, RMT Indication. SW NAVAL and ABNML
CHECK is shown when this switch is pressed.
RMT.SW NAVAL indicates that the corresponding switch is pressed.
ABNML indicates that one or several units of a same group have an abnormal condition.

16. Temperature indication

17. TIMER, DEMAND, EMERGENCY and NO FUNCTION indication
TIMER is show when this switch is pressed.
DEMAND is indicated when the demand input is set by the outside input function.
EMERGENCY is indicated when the emergency stop signal is input by the outside input function.
NO FUNCTION is indicated when the pressed switch is not available

18. Group operation
The ∩ mark shows the operation conditions of each group.
OFF means STOP.
∩ ON means Operation and Flickering means abnormality.

19. Group Number Indication

20. Check Model Number indication

21. Swing Louver Indication

10.5.1. Group Selection and Monitoring Unit Operation Status

The central station can control up to 16 groups individually or simultaneously.
(The selected groups can be operated and the unit operation status of the groups can be monitored).

NOTE:
The group number is changed by pressing the GROUP switch. The group without setting is not indicated.

1. Supply power to the unit

ATTENTION:
Supply power the unit more than 12 hours before unit operation for compressor protection. Do not cut off power during while using the air conditioner

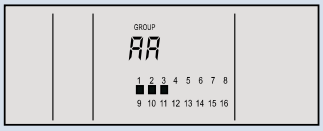

2. Depress the GROUP switch.

Every time the GROUP switch is pressed, the group number to be controlled is changed in the order as shown below. In case of AA, all the units are controlled simultaneously.

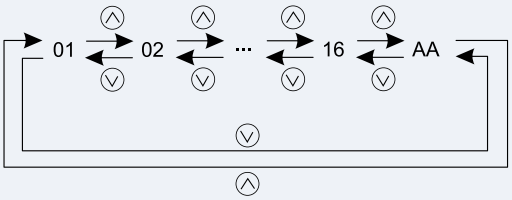

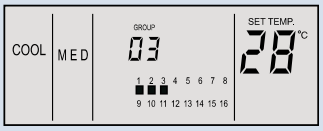

3. When selecting the group, the setting conditions of each group are indicated.

When the remote control switch used, the content of the setting is indicated.
1■~16■ shows the operating conditions of each group as follows:
- Turned OFF (■): stopped
- Turned ON (): In operation
- Flickering (■): abnormality

The Run indicator (Red Lamp) shows the following:
- Turned OFF: All Groups are stopped
- Turned ON: more than 1 Group in Operation
- Flickering: more than 1 Group in Abnormal Condition

In case of group AA, the indications (operation mode, setting temperature, air flow, louver angle and RMT.SW NAVL are indicated only when all groups are in the same setting.

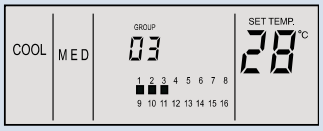

NOTE:
The indication of setting temperature shows no temperature setting.

10.5.2. Setting of Operation Mode

<FUNCTIONS>

- COOL
  Funtion: To cool the room temperature by distributing the cooled air
- HEAT
  Function: To heat the room temperature by distributing the heated air
- DRY
  Function: To dehumidify more than standard cooling operation.
- FAN
  Function: To circulate the room air.

1. Depress the GROUP switch and select the group.

(Refer to item 2 of "A. Group Selection and Monitoring Unit Operation Status" in previous page)
The right figure shows the case of selecting group 4.

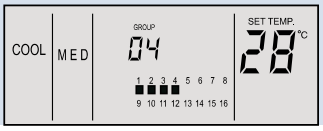

2. Depress the MODE switch.

The operation mode is changed in the followingn order:

→ FAN → COOL → HEAT → DRY

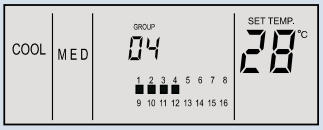

NOTE:
- *The above indications show the case of setting operation mode for group 4.*
  The same setting procedure shall be performed for other groups. If the same setting is used for all groups, select group number AA.
- *Some operation modes can not be set according to the unit model. Contact to HITACHI dealer or your distributor for details.*

10.5.3. Setting of Temperature, Fan Speed and Louver Angle

NOTE:
- *Do not touch the CHECK switch. The CHECK switch is only for service use.*
- *When the CHECK switch is depressed by a mistake and the central station is changed to the check mode, depress the RESET switch to cancel.*

1. Depress the GROUP switch and select the group.

(Refer to item 2 of Group Selection and Monitoring Unit Operation Status in previous page).
The right figure shows the case of selecting group 4.

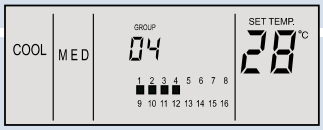

<TEMPERATURE>

Set temperature by pressing TEMP switch.
By pressing "⌃" switch, the temperature is increased by 1°C (Maximum: 86.00°F).
When you press the "⌄" switch, the temperature is decreased by 1°C (minimum: 19°C, for Cool, Dry and Fan mode, minimum 17°C for Heat mode).
When pressing "⌃" for 3 seconds at set temperature at 30°C, or pressing for 3 seconds at the minimum set temperature, the temperature is not set and the indication of setting temperature is "--". In this case, press "⌃" or "⌄"; the indication of setting temperature returns to the minimum temperature or 30°C.
The figure on the right shows the case of setting at 22°C.

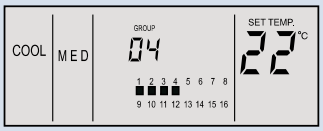

NOTE:
The examples show the setting range for standard model. The setting range may be different according to the connected unit model.

10

<FAN SPEED>

Press the FAN SPEED switch. By depressing the “FAN SPEED” switch, the indication is changed in the following order:

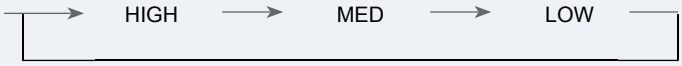

The figure on the right shows the case of setting HIGH speed.

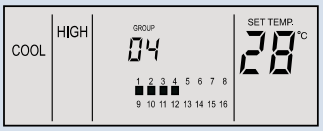

NOTE:
In case of dry operation, the fan speed is automatically changed and fixed at the “LOW” fan speed. In this case, the fan speed can not be changed (The indication remains at the setting condition).

<LOUVER ANGLE>

Press the AUTO LOUVER switch.
Each time the AUTO LOUVER switch is pressed, the indication of the louver angle is changed.
Press the AUTO LOUVER switch at the “ ” position; the indication is changed to “ ” to indicate that the mode is set at Auto-Swing. Press the AUTO LOUVER switch again, the indication changes to “ ” .
Thefigure on the right shows the case of setting Auto-Swing.

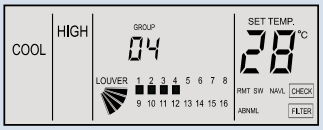

◈ Example: In the Case of 4-Way Cassette Type.

NOTE:
- *The fixing angle of the louver shown beside is the case of 4-way cassette type Indoor Unit. The fixing angle is different according to unit model. Refer to the operation manual of each model for details.*
- *There exists a time lag between the indicated louver position on the LCD and the actual louver angle during operation.*
  Therefore, when setting the louver, set the angle according to the indicated louver angle on the LCD.
- *When the AUTO LOUVER switch is depressed, the louver may not stop immediately.*

Indication							
Louver Angle (approx.)	Approx. 20°	Approx. 25°	Approx. 30°	Approx. 40°	Approx. 45°	Approx. 55°	Approx. 70°
Cooling / Dry	Angle Range						
Heating	Angle Range						

Angle Range
Recommended Angle

ATTENTION:
The louver angle is automatically changed during heating operation for unit control.

When heating operation is started
When dry operation is started
When temperature controller is activated

→ The louver angle is automatically changed.

→ When the discharged air temperature is increased over 30°C, the louver angle automatically returns to the set position.

The LCD indication remains at the setting condition.

10.5.4. Unit Operation

1. Depress the GROUP switch and select the group.

(Refer to item 2 “Group Selection and Monitoring Unit Operation Status” in previous pages)
The right figure shows the case of selecting group 4.

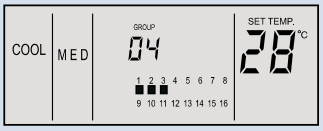

2. Press RUN/STOP Switch.

If the selected group is in operation, the group is stopped by pressing the “RUN/STOP” switch.
In case that the selected group is not in operation, the group is started by depressing RUN/STOP switch.
In case of group AA, depress RUN/STOP switch, and;

a. All the groups are stopped (when all the groups are stopped (RUN lamp is OFF)).
b. All the groups will start up (if more than 1 group is in operation (RUN lamp is ON)).

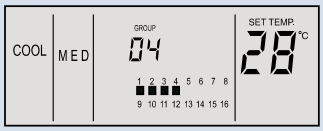

NOTE:

- *The indications above show the case of setting operation mode for group 4.*
- *The same setting procedure shall be performed for other groups. In case of the simultaneous operation of all groups, select group number AA.*

10.5.5. Prohibiting Operation by Remote Control Switch

<FUNCTION>

To prohibit the operation by the remote control switch.
When this function is available, the CENTRAL indication appears on the LCD on the remote control switch and the operation by the remote control switch is not available.

1. Depress the GROUP switch and select the group.

(Refer to item 2 “Group Selection and Monitoring Unit Operation Status” in previous pages).
The figure on the right shows the case of selecting group 4.

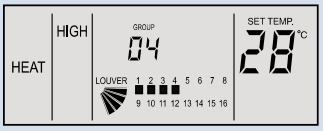

2. Depress the RNT.SW NAVL switch.

Every time the “RMT. SW NAVL switch is pressed, the RMT. SW NAVL indication turns on and off alternately.

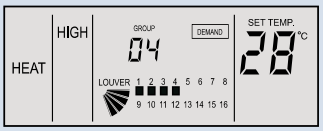

The above indications show the case of setting operation mode for group 4.
The same setting procedure shall be performed for the other groups. If the same setting is used for all groups, select group number AA.
Although the RMT. SW NAVL” function is set, in case of operation by means of the central station, the unit can be stopped and restarted by means of the Remote Control Switch.
If the unit is not used with the remote control switch, the RMT. SW NAVL function will have to be set.
If it is used together with other controllers, do not set the RMT. SW NAVL function. Don’t adjust to the RMT. SW NAVL function either by means of other controller since a malfunction may occur.
If the temperature (--) is not set, it can be adjusted with the remotecontrol switch while the RMT. SW NAVL function is available.

ATTENTION

10.5.6. Timer Operation

<FUNCTION>

To set the schedule operation available or not available by the signal from the control timer in case of connection with the control timer (PSC-5T; Option).
The scheduled operation can be set as available or not available individually for each unit, however, the operation schedule the same for all units.

1. Depress the GROUP switch and select the group.

(Refer to item 2 “Group Selection and Monitoring Unit Operation Status” in previous pages).
The figure on the right shows the case of selecting group 4.

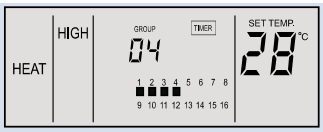

2. Depress the TIMER switch.

Each time the TIMER switch is pressed, the TIMER indication is turned ON and OFF alternately.
The group with timer setting is operated according to setting by the signal from the control timer.
The figure on the right shows the case of setting timer operation.

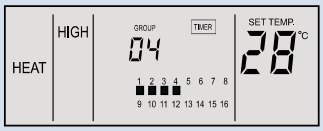

NOTE:
- *The above indications show the case of setting operation mode for group 4.*
- *The same setting procedure shall be performed for other groups. In case of the simultaneous operation of all groups, select group number AA.*

10.5.7. Other LCD Indications

<EMERGENCY>

The EMERGENCY is indicated when the emergency stop signal is input by the outside input function.
During the emergency stoppage, indoor units are stopped and the operation by the remote control switch is not available.
Contact your distributor or dealer of HITACHI for details.

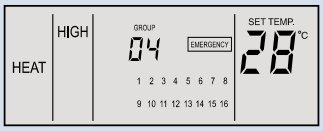

<DEMAND>

The DEMAND is indicated when the demand input is set by the outside input function.
The indication is indicated for the group with demand setting and the DEMAND indication flickers when the demand signal is input.
Contact your distributor or dealer of HITACHI for details.

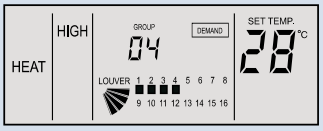

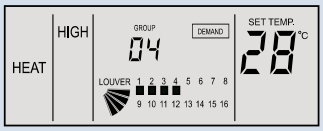

<FILTER>

Filter Clogging:
When the FILTER indicator is shown, it means that the air filter of the indoor unit is clogged.
Clean the air filter. After cleaning, press the RESET switch and the FILTER indication is turned OFF.

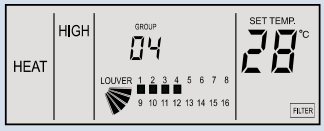

10.5.8. Indication in Abnormal Conditions

<ABNORMAL>

The Run Lamp (Red Lamp) is flickered when there is a group in abnormal condition.
The “ALARM” is indicated on the LCD.
The “■” indication flickers for the group that is in an Abnormal Condition.
Depress the GROUP switch and select the group with alarm, the indication of unit No. model code, alarm code and the normal indication is repeatedly indicated (There is a case that the model code may not be indicated according to the unit model).
If several units are in abnormal status, theprevious indication is shown alternately.
Check the contents of LCD indication and contact your distributor or dealer of HITACHI for details.

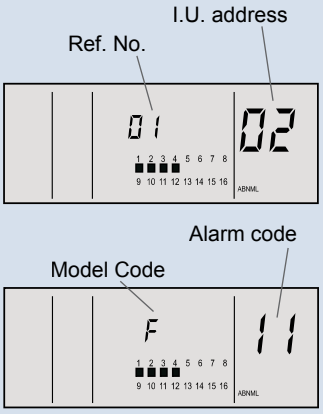

<POWER FAILURE>

All the indications are disappeared.
In case of unit stoppage due to the power failure, the unit is not started again after the power recovery. Perform the starting operation again.
In case of instant power failure within 2 seconds, the unit is automatically started again.

<ELECTRICAL NOISE>

All the indications disappeared, and the unit operation may be stopped with the protection against electrical noise device. Perform the starting operation again.

10.6. Optional Accessories for RCS

10.6.1. Remote Control Cable (PRC-10E1~PRC-30E1)

◈ For PC-P1HE, PSC-5S, PC-P5H and PC-RLH8/9/11

Connect a control twisted cable (0.75 mm² x 2 wires) in the installation, with soldering, or use an optional extension remote control cable. For the details of the optional remote control cable, refer to the following table:

Model	Length (m)	Type of Cable	Specifications
PRC-10E1	10	TPC	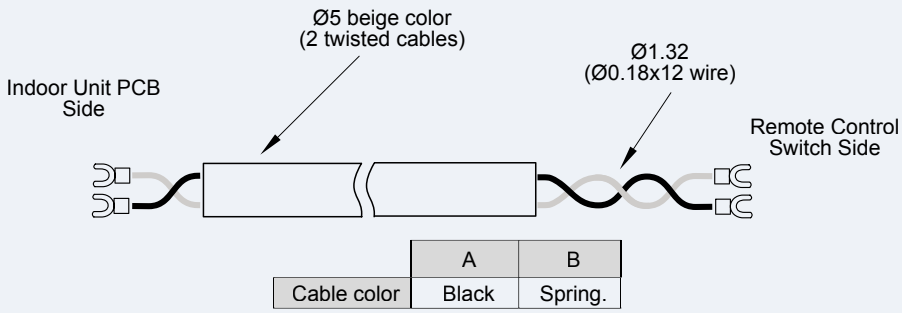
PRC-15E1	15	TPC	
PRC-20E1	20	TPC	
*PRC-30E1	30	TPC	

*: Production is started after receipt of orders.
TPC: Twisted pair cable

10.6.2. 3P Connector cable

This connector is used when a remote ON/OFF device is connected or signals come from the printed circuit boards of the indoor and outdoor units.
One set contains five 3P connector cables.

Model	Application	Remarks	Specifications
PCC -1A	Optional functions of Outdoor Unit PCB	JST connector XARP-3 If a long cord is needed, connect field supplied wires (0.5mm²) with soldering.	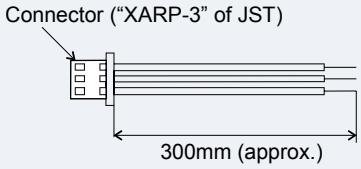

HITACHI
Inspire the Next

11. Available Optional Functions

This chapter gives a brief explanation of the available optional functions for the new Hitachi SET FREE FSN(E)/FXN(E)/FSVNE series.

Contents

11. Available Optional Functions 291
11.1. Indoor Units Available Optional Functions 292
11.2. Outdoor Units Available Optional Functions 293
11.3. Remote Controllers Available Optional Functions 294

HITACHI
Inspire the Next

11.1. Indoor Units Available Optional Functions

In the table below there is some information about the optional functions for FSN(E) Series.
For more information check Chapter 7 of Service Manual, code SMXX0032.

Available options		Indoor Units								
Optional Function	Useful explanation	RCI	RCD	RPC	RPI	RPK	RPF	RPFI	KPI	ECONO-FRESH
Remote Control ON/OFF Function	This function provides a control to stop and start the system from a remote place. This optional function is very useful to hotels and offices buildings to control the indoor units from building management system.	●	●	●	●	●	●	●	●	●
Cancellation of Commands from Remote Control Switch After Forced Stoppage	This function stops the indoor unit and cancels the commands from the remote controller while it is activated.	●	●	●	●	●	●	●	●	●
Cooling or Heating operation Mode Setting	This function provides a control to change the operation mode from a remote place.	●	●	●	●	●	●	●	●	●
Control by Field-Supplied Room Thermostat	This function allows to control the unit by an external thermostat. This could reduce the problems due to stratification of indoor air.	●	●	●	●	●	●	●	●	●
Remote Temperature Sensor Control	Instead of using the Inlet Air Thermistor to control the unit, it is using the average between the Inlet Air Thermistor and the Remote Temperature sensor.	●	●	●	●	●	●	●	●	●
Picking Up Signals	This function allows to give up information about how is working the unit in order to activate the necessary devices.	●	●	●	●	●	●	●	●	●
Automatic operation when power supply is ON	This function retains the settings of the unit if power supply is interrupted. The unit will start when power is restored.	●	●	●	●	●	●	●	●	●
Restarting Function after Power Failure	This function retains the settings of the unit if power supply is interrupted. The unit will restart when power is restored if the unit was ON before the power failure	●	●	●	●	●	●	●	●	●
Optional Sensor Connection	This function is to connect an enthalpic sensor or a CO_2 concentration sensor.	✕	✕	✕	✕	✕	✕	✕	✕	●

● Available
✕ Not Available

11.2. Outdoor Units Available Optional Functions

Optional functions		Outdoor Units Series		
Optional Function	**Useful explanation**	**FSN(E)**	**FXN(E)**	**FSVNE**
Fixing Operation Mode (Heating / Cooling)	This function fixes the operation mode, heating or cooling. If indoor unit is set on Heating (Cooling) mode when Cooling (Heating) mode is fixed, the indoor unit will be Thermo-OFF.	●	✕	●
Demand	When this function is activated the compressor is stopped and the indoor units are put under Thermo-OFF condition.	●	●	●
Snow sensor	This function operates all the outdoor fans at full speed during compressor stoppage if it detects that the snow sensor is covered.	●	●	✕
Enforced stoppage	This function produces and emergency stoppage, compressor and indoor fans do not operate.	●	●	✕
Defrosting condition change over	This function changes the defrosting operation conditions. It is specially interesting for cold areas.	●	●	●
Demand Current Control	This function regulates Outdoor running current, 60%, 70%, 80%, if demanded current is above set current the indoor unit capacity is reduced still thermo off if needs	●	●	✕
Indoor unit fan control during thermo-OFF at heating	This function activates the Indoor fans as a cycle (2 min ON, 6 min OFF) in order to reduce the unpleasent aspects of Indoor Thermo-OFF working conditions.	●	●	●
Cancellation of Outdoor Ambient Limit of Heating	This function allows to work in Heating Mode without top ambient temperatures restriction.	●	●	●
Cancellation of Outdoor Ambient Limit of Cooling	This function allows to work in Cooling Mode without low ambient temperatures restriction.	●	●	●
Night Shift (Low Sound) Operation	This function decreases the sound levels of the units, and the cooling capacity is also decreased.	●	●	●
Slow defrost setting	When this function is activated the indoor fan speed at defrost mode is change to slow instead of stopped.	●	●	●
Cancellation of Outdoor Hot-Start Limit	This function allows to start the Outdoor unit without waiting for the compressor temperature to go above 40ºC.	●	●	●
Piping length setting	This function indicates to the unit the distance between the Outdoor and the farthest indoor unit is bigger than 100 m.	●	●	✕
Low noise setting	This function reduces the maximum speed of the fan motor, consequently the noise level is reduced.	●	●	✕
Wave Function Setting	This function regulates Outdoor running current, if demanded current is above set current the indoor unit capacity is reduced still thermo off if needs. The running current control is not a fixed value it is changing between a maximum value.	●	●	✕
Picking Up Signals	This function allows to give up information about how is working the unit in order to activate the necessary devices.	●	●	✕

● Available

✕ Not Available

11.3. Remote Controllers Available Optional Functions

Item	Optional functions	Setting Condition	Contents of parts	Content
b1	Removal of Heating temperature Calibration	00	Not Available	This function is used to eliminate the 4ºC temperature shift.
		01	Available	
b2	Circulation Function at Heating Thermo-OFF	00	Not Available	This function is to avoid the stratification of air.
		01	Available	
b3	Enforced 3 Minutes Minimum Operation Time of Compressor	00	Not Available	This function is used to protect the compressor when it starts up and stops frequently.
		01	Available	
b4	Change of Filter Cleaning Time	00	Std.	With this function is possible to change the time when the remote controller advise about when is necessary to change the air filter.
		01	100 Hours	
		02	1200 Hours	
		03	2500 Hours	
		04	No indication	
b5	Fixing the operation mode	00	Not Available	This function eliminates the possibility of changing operation mode.
		01	Available	
b6	Fixing the setting temperature	00	Not Available	This function eliminates the possibility of changing setting temperature.
		01	Available	
b7	Fixing of Operation as Exclusive Cooling Unit	00	Not Available	This function eliminates Heating mode.
		01	Available	
b8	Automatic COOL/HEAT Operation	00	Not Available	This function changes automatically from Cool to Heat.
		01	Available	
b9	Fixing the air volume	00	Not Available	This function eliminates the possibility of changing fan speed.
		01	Available	
C1	Not Prepared	-	-	-
C2	Not Prepared			
C3	Not Prepared			
C4	Drain Pump in Heating	00	Not Available	This function is used to activate the drain pump in Heating mode.
		01	Available	
C5	Static Pressure Selection	00	Medium static pressure (Factory setting)	This function is used to change the static pressure levels from the remote controller on the RPI units.
		01	High Static Pressure	
		02	Low Static Pressure	
	Increasing Fan Speed (RCI,RCD)	00	Normal	This function is used to change the fan speed due to the high ceiling.
		01	Increasing speed 1	
		02	Increasing speed 2	
C6	Hi Speed at Heating Thermo-OFF	00	Not Available	This function is used to increase the fan speed when Thermo-OFF.
		01	Available	
C7	Cancelling of Enforced 3 Minutes Minimum Operation Time of Compressor	00	Not Available	This function is used to cancel the “Enforced 3 Minutes Minimum Operation Time of Compressor”.
		01	Available	
C8	Thermistor of Remote Control Switch	00	Control by Indoor Suction Thermistor	This function is used to control the unit with the thermistor of remote control.
		01	Control by Thermistor of Remote Control Switch	
		02	Control by Average value of Indoor Suction Thermistor and Thermistor of Remote Control Switch	

Item	Optional functions	Setting Condition	Contents of parts	Content
C9	Not Prepared	-	-	-
CA	Not Prepared	-	-	-
Cb	Selection of Forced Stoppage Logic	00	Forced Stoppage Input A Contact	With this function we select the forced stoppage logic.
		01	Forced Stoppage Input B Contact	
CC	Not Prepared	-	-	-
d1	Power Supply ON/OFF 1	00	Not Available	This function retains the settings of the unit if power supply is interrupted. The unit will start when power is restored.
		01	Available	
d2	Not Prepared	-	-	-
d3	Power Supply ON/OFF 2	00	Not Available	This function retains the settings of the unit if power supply is interrupted. The unit will restart when power is restored if the unit was ON before the power failure.
		01	Available	
E1	(Econofresh) All Fresh Operation	00	Not Available	This function allows to open the outdoor air damper.
		01, 02	Available	
	(KPI) Ventilation mode	00	Auto Ventilation	This function is used to set the ventilation mode of the total heat exchanger.
		01	Ventilation by Total Heat Exchanger	
		02	Ventilation Bypass (No Total Heat Exchanger)	
E2	Econofresh) Enthalpy Sensor	00	Not Available	This function can set the Enthalpy Sensor Input.
		01	Available	
	(KPI) Increasing Supply Air Volume	00	Not Available	This function is used to make the room pressure higher than that of the surrounding rooms.
		01	Available	
E3	Not Prepared	-	-	-
E4	(Econofresh) Gas Sensor	00	Not Available	This function can set the Gas Sensor Input.
		01, 02	Available	
	(KPI) Precooling/ preheating period	00	Std.	This function delays the start up of the total heat exchanger operation.
		01	30 minutes	
		02	60 minutes	
E5	Not Prepared	-	-	-
F1	Automatic Setting of OFF Timer	00	No Function	This function is used to set the OFF timer function automatically when the unit is started by the remote control switch.
		01	Deactivate after 1 Hours	
		02	Deactivate after 2 Hours	
		~	~	
		23	Deactivate after 23 Hours	
		24	Deactivate after 24 Hours	
F2	Remote Control Main-Sub Setting	00	Main	This function is used when two remote controls are installed in one system.
		01	Sub	

12. Troubleshooting

This chapter gives a concise description of the most common alarm codes of the new Hitachi SET FREE FSN(E)/FXN(E)/FSVNE Series.

Contents

12. Troubleshooting.....297
12.1. Alarm Codes.....298

If RUN lamp flashes for 2 seconds, there is a failure in transmission between Indoor Unit and Remote Control Switch. Possible causes are:

Remote Cable broken
Contact Failure in Remote Control Cable
IC or Microcomputer defective
In any case, ask your contractor for service

If RUN lamp flashes 5 times (5 seconds) with unit number and alarm code displayed, note the alarm code (see table below) and ask your contractor for service.

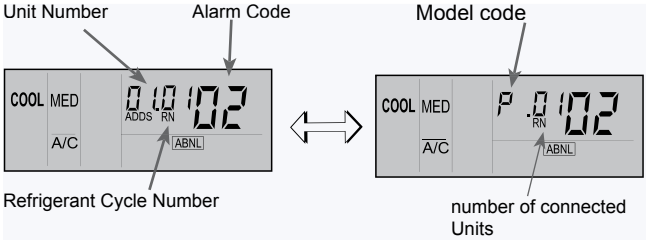

12.1.Alarm Codes

Code No.	Category	Content of Abnormality	Leading Cause
01	Indoor Uni	Activation for protection device	Failure of Fan Motor, Drain Discharge, PCB, Relay.
02	No.2 system	Activation for protection device	Activation of PSH.
03	Gear	Abnormality between Indoor (or Outdoor) and Outdoor (or Indoor)	Incorrect Wiring. Failure of PCB. Tripping of fuse Power Supply OFF.
04	Inverter	Abnormal operation between the inverter and the control PCB	Fan controller transmission failure.
04.	FSN(E)/FXN(E) Inverter	Abnormality of Fan Controller	Fan controller transmission failure.
05	Gear	Abnormality of power source Wiring	Incorrect Wiring, Reverse Phase.
06.	Voltage Drop	Voltage Drop by Excessively Low or High Voltage to Outdoor Unit	Voltage Drop of Power Supply. Incorrect Wiring or insufficient Capacity of Power Supply Wiring.
07	Cycle	Decrease in the discharge gas superheat	Excessive Refrigerant Charge. Expansion Valve Open Lock.
08		Increase in the discharge gas temperature	Insufficient Refrigerant. Ref. Leakage, Clogging or Expansion Valve Close Lock.
09	No.2 system	Activation for protection device	Failure of fan motor.
11	Sensor on the indoor unit	Inlet air thermistor	Failure of Thermistor, Sensor, Connection.
12		Outlet air thermistor	
13		Freeze Protection Thermistor	
14		Thermistor for Gas pipe	
15		Fresh Outdoor Air Thermistor (Econofresh)	
19		Activation of the protection device for the fan motor	Failure of fan motor.
21	Sensor on the Outdoor Unit	High pressure sensor	Failure of Thermistor, Sensor, Connection.
22		Fresh Outdoor Air Thermistor	
23		Discharge Gas Thermistor on Comp.	
24		Evaporation thermistor	
26	Only for FSVNE	Suction Gas Thermistor	
29		Low pressure Sensor	
30	system	Incorrect connection system	More than two CH-units are connected between the Indoor Units and Outdoor Unit.
31		Incorrect setting of Outdoor and Indoor Unit	Incorrect Setting of capacity Code.
32		Abnormal Transmission of Other Indoor Unit	Failure of Power Supply, PCB in other Indoor Unit. Failure of other Indoor Unit of the same Refrigerant Cycle.
35		Incorrect setting of Indoor Unit No.	Existence of the same Indoor Unit No. In the same Refrigerant Cycle.
36		Incorrect Indoor unit Type	Indoor Unit is not for R410A.
38		Abnormality of Protective Circuit in Outdoor Unit	Failure of Indoor Unit PCB. Incorrect wiring. Connection to PCB in Indoor Unit.
39		Abnormality of Running Current at Constant Compressor	Overcurrent, Melted Fuse or Failure of Current Sensor.

◆ Alarm codes (Cont.)

Code No.	Category	Content of Abnormality	Leading Cause
43	Pressure	Pressure ratio decrease protection activation	Failure of Compressor, Inverter.
44		Low pressure increase protection activation	Overload in Indoor Unit in Cooling. High Temperature of Outdoor Air In Heating Expansion Valve Open Lock.
45		High pressure increase protection activation	Overload. Excessive Refrigerant. Clogging of the heat exchanger.
46		High pressure decrease protection activation	Insufficient refrigerant.
47		Low pressure decrease protection activation	Insufficient refrigerant.
51	Inverter	Abnormality of Current Sensor for Inverter	Failure of the sensor on the inverter PCB.
52		Overcurrent Protection Activation	Overload, Overcurrent, Locking to Compressor.
53		IPM protection activation	Automatic Stoppage of IPM (Overcurrent, Low Voltage or Overheating).
54		Inverter Fin Temperature Increase	Abnormal Inverter Fin Thermistor Abnormal Outdoor Fan.
56	Outdoor Fan	Abnormality of Detection for Fan Motor Position	Abnormal Detection Circuit of Transmission.
57		Fan Controller Protection Activating	Abnormal Fan Speed.
58		Abnormality of Fan Controller	Overcurrent, Abnormal Fan Controller Fin.
96	Sensor on KPI Unit	Room temperature thermistor	Failure of Thermistor, Sensor, Connection.
97		Outdoor temperature thermistor	
EE	Inverter	Compressor Protection	3 Time Occurrence of Alarm Giving Damage to Compressor within 6 hours.

HITACHI is participating in the EUROVENT Certification Programme.
Products are as specified in the EUROVENT Directory of Certified Products.

Hitachi Air Conditioning Products Europe, S.A.
Ronda Shimizu,1 - Políg. Ind. Can Torrella
08233 Vacarisses (Barcelona) España
ISO 9001 Certified by AENOR, Spain
ISO 14001 Certified by AENOR, Spain

Hitachi Air Conditioning Systems Operation
Shimizu-shi, Shizuoka-ken, Japan
ISO 9001 Certified by JQA, Japan
ISO 14001 Certified by JQA, Japan

Hitachi Air Conditioning Products (M) Sdn. Bnd.
Lot No. 10, Jalan Kemajan Bangi Industrial Estate
43650 Bandar Baru Bangi, Selangor Darul Ehsan, Malaysia
Certification ISO 9001, Malaysia
Certification ISO 14001, Malaysia

HITACHI
Inspire the Next

TCGB0032 rev.1 06/2006 - Printed in Spain